ARMY TM 9-2330-213-14&P
AIR FORCE TO 36A11-1-461

TECHNICAL MANUAL

OPERATOR'S, UNIT, DIRECT SUPPORT,
AND GENERAL SUPPORT MAINTENANCE MANUAL
(INCLUDING REPAIR PARTS AND SPECIAL TOOLS LISTS)
FOR

TRAILER, CHASSIS: 1-1/2-TON, 2-WHEEL
M103A1 (NSN 2330-00-835-8629)
M103A3 (NSN 2330-00-141-8052)

TRAILER, CARGO: 1-1/2-TON, 2-WHEEL
M105A1 (NSN 2330-00-835-8631)
M105A2 (NSN 2330-00-141-8050)
M105A2C (NSN 2330-00-542-5689)

TRAILER, TANK, WATER: 1-1/2-TON, 2-WHEEL, 400-GALLON
M107A1 (NSN 2330-00-835-8633)
M107A2 (NSN 2330-00-141-8049)
M107A2C (NSN 2330-00-542-5688)

TRAILER, VAN, SHOP: FOLDING SIDES, 1-1/2-TON, 2-WHEEL
M448 (NSN 2330-00-631-5692)

Operating Instructions 2-1

Operator/Crew PMCS 2-6

Lubrication Instructions 3-1

Operator/Crew Troubleshooting Procedures 3-8

Unit PMCS 4-4

Unit Troubleshooting Procedures 4-7

Maintenance Allocation Chart (MAC) B-1

Repair Parts and Special Tools Lists (RPSTL) F-1

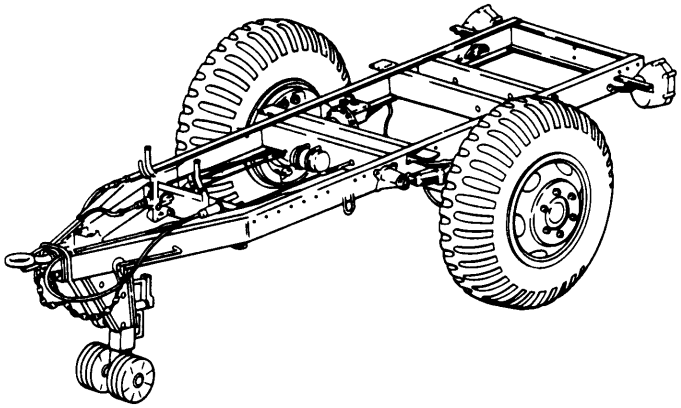

M103 SERIES

This manual supersedes TM 9-2330-213-14&P/TO 36A11-1-461, dated 30 September 1985.

Approved for public release: distribution unlimited.

HEADQUARTERS, DEPARTMENTS OF THE ARMY AND THE AIR FORCE

OCTOBER 1990

FOR INFORMATION ON FIRST AID, REFER TO FM 4-25.11

WARNING

ASBESTOS HAZARD

DO NOT handle brakeshoes, brakedrums, or other brake components unless area has been properly cleaned. There may be asbestos dust on these components which can be dangerous if you touch it or breathe it. Wear an approved filter mask and gloves. Never use compressed air or a dry brush to clean brake components. Dust may be removed using an industrial-type vacuum cleaner. Clean dust or mud away from brake components with water and a wet, soft brush or cloth. Failure to follow this warning may result in serious illness or death.

WARNING

COMPRESSED AIR

Compressed air used for cleaning or drying purposes, or for clearing restrictions, should never exceed 30 psi (207 kPa). Wear protective clothing (goggles/shield, gloves, etc.) and use caution to avoid injury.

WARNING

COUPLING AND UNCOUPLING TRAILER

All personnel must stand clear of towing vehicle and trailer during coupling and uncoupling operations. Failure to follow this warning may result in serious injury or death.

WARNING

DRY CLEANING SOLVENT

Dry cleaning solvent P-D-680 is toxic and flammable. Always wear protective goggles and gloves, and use only in a well-ventilated area. Avoid contact with skin, eyes, and clothes, and DO NOT breathe vapors. DO NOT use near open flame or excessive heat. The solvent's flash point is 100° F-130°F (38°C-59°C). if you become dizzy while using cleaning solvent, immediately get fresh air arid medical help. If solvent contacts eyes, immediately wash your eyes and get medical aid.

WARNING

ELECTRICAL SYSTEM

- When troubleshooting an electrical malfunction or performing electrical maintenance, ALWAYS disconnect intervehicular electrical cable from towing vehicle. Failure to do so may result in injury or death due to electric shock.
- Battery acid (electrolyte) is extremely dangerous. Use care when removing battery shop door caps. Serious injury to personnel may result if battery acid contacts skin or eyes.
- Auxiliary power cable must be disconnected from outside housing before performing any work on 110-volt electrical system. Failure to follow this warning may result in injury or death.

TM 9-2330-213-14&P
AIR FORCE TO 36A11-1-461

C1

CHANGE
NO. 1

HEADQUARTERS
DEPARTMENTS OF THE ARMY AND AIR FORCE
Washington, D.C., 05 June 2006

Operator's, Unit, Direct Support,
And General Support Maintenance Manual
(Including Repair Parts and Special Tools Lists)
for

TRAILER, CHASSIS: 1-1/2-TON, 2-WHEEL
M103A1 (NSN 2330-00-835-8629)
M103A3 (NSN 2330-00-141-8052)

TRAILER, CARGO: 1-1/2-TON, 2-WHEEL
M105A1 (NSN 2330-00-835-8631)
M105A2 (NSN 2330-00-141-8050)
M105A2C (NSN 2330-00-542-5689)

TRAILER, TANK, WATER: 1-1/2-TON, 2-WHEEL, 400-GALLON
M107A1 (NSN 2330-00-835-8633)
M107A2 (NSN 2330-00-141-8049)
M107A2C (NSN 2330-00-542-5688)

TRAILER, VAN, SHOP: FOLDING SIDES, 1 1/2-TON, 2-WHEEL
M448 (NSN 2330-00-631-5692)

TM 9-2330-213-14&P, 09 October 1990, is changed as follows:

1. Remove old pages and insert new pages as indicated.

2. New or changed material is indicated by a vertical bar in the margin of the new page. This change implements Army Maintenance Transformation and changes the Maintenance Allocation Chart (MAC) to support Field and Sustainment Maintenance.

3. A Change 1 beside the page number indicates new or changed material. Added or revised illustration pages will also include the Change 1 beside the page number.

Remove Pages	**Insert Pages**
a thru b	a thru b
1-7 thru 1-11/1-12 Blank)	1-7 thru 1-11/(1-12 Blank)
A-1 thru A-2	A-1 thru A-2
B-1 thru B-7/(B-8 Blank)	B-1 thru B-9/(B-8 Blank)
Fig. 20 and 20-1	Fig. 20-1 and 20-1
Fig. 21 and 21-1	Fig. 21 and 21-1
Fig. 23 and 23-1	Fig. 23 and 23-1
I-1 thru I-14	I-1 thru I-14
I-17 thru I-20	I-17 thru I-20
I-23 thru I-24	I-23 thru I-24
I-31 thru I-34	I-31 thru I-34
2028-2 forms	2028 forms

4. File this change sheet in front of publication for reference.

DISTRIBUTION STATEMENT A. Approved for public release; distribution is unlimited.

By Order of the Secretary of the Army:

PETER J. SCHOOMAKER
General, United States Army
Chief of Staff

Official:

JOYCE E. MORROW
Administrative Assistant to the
Secretary of the Army

0612903

By Order of the Secretary of the Air Force:

JOHN P. JUMPER
General, United States Air Force
Chief of Staff

Official:

GREGORY S. MARTIN
General United States Air Force
Commander, Air Force Materiel Command

DISTRIBUTION: To be distributed in accordance with the initial distribution number (IDN) 390572, requirements for TM 9-2330-213-14&P.

INSERT LATEST CHANGED PAGES. DESTROY SUPERSEDED DATA.

LIST OF EFFECTIVE PAGES

Date of issue for the original manual and changed pages are:

Original: 09 OCT 1990
Change 1: 05 JUN 2006

TOTAL NUMBER OF PAGES FOR FRONT AND REAR MATTER IS 26 AND TOTAL NUMBER OF PAGES IN CHAPTERS IS, 422 CONSISTING OF THE FOLLOWING:

Page No.		***Change No.**
Front Cover/Blank (2 pages)		0
Change Transmittal Page/Blank (2 pages)		1
Authentication Page (Original)/Blank (2 pages)		1
Effected Pages/Blank (2 pages)		1
Warnings (a-b/Blanks) (4 pages)		1
Distribution Page – vi (6 pages)		0
Chapter 1.	Introduction (12 pages)	1
Chapter 2.	Operating Instructions (22 pages)	0
Chapter 3.	Operator Maintenance (12 pages)	0
Chapter 4.	Unit Maintenance (150 pages)	0
Chapter 5.	Direct Support and General Support Maintenance (24 pages)	0
Appendix A.	References (2 pages)	0
Appendix B.	Maintenance Allocation Chart (8 pages)	1
Appendix C.	Components of End Item and Basic Issue Items List (2 pages)	0
Appendix D.	Additional Authorization List (2 pages)	0
Appendix E.	Expendable/Durable Supplies and Materials List (4 pages)	0
Appendix F.	Repair Parts and Special Tools Lists/Blanks (146 pages)	1
Appendix G.	Illustrated List of Manufactured Items (4 pages)	0
Appendix H.	Torque Limits (2 pages)	0
Appendix I.	Cross Reference Index)/PIN (34 pages	1
Alphabetical Index (10 pages)		0
Authentication Page (New)/Blank (2 pages)		1
Back cover (2 pages)		0

*Zero in this column indicates an original page.

• ARMY TM 9-2330-213-14&P
• AIR FORCE TO 36A11-1-461

TECHNICAL MANUAL
TM 9-2330-213-14&P

TECHNICAL ORDER
TO 36A11-1-461

HEADQUARTERS, DEPARTMENTS OF
THE ARMY AND THE AIR FORCE
Washington D.C., 9 0ctober 1990

OPERATOR'S, UNIT, DIRECT SUPPORT, AND GENERAL SUPPORT MAINTENANCE MANUAL (INCLUDING REPAIR PARTS AND SPECIAL TOOLS LISTS)

for

TRAILER, CHASSIS: 1-1/2-TON, 2-WHEEL

M103A1 (NSN 2330-00-835-8629)
M103A3 (NSN 2330-00-141-8052)

TRAILER, CARGO: 1-1/2-TON, 2-WHEEL

M105A1 (NSN 2330-00-835-8631)
M105A2 (NSN 2330-00-141-8050)
M105A2C (NSN 2330-00-542-5689)

TRAILER, TANK, WATER: 1-1/2-TON, 2-WHEEL, 400-GALLON

M107A1 (NSN 2330-00-835-8633)
M107A2 (NSN 2330-00-141-8049)
M107A2C (NSN 2330-00-542-5688)

TRAILER, VAN, SHOP: FOLDING SIDES, 1-1/2-TON, 2-WHEEL

M448 (NSN 2330-00-631-5692)

Current as of 30 March 1990

REPORTING ERRORS AND RECOMMENDING IMPROVEMENTS

You can help improve this manual. If you find any mistakes or if you know of a way to improve the procedures, please let us know. Mail your letter, DA Form 2028 (Recommended Changes to Publications and Blank Forms), or DA Form 2028-2, located in the back of this manual, direct to: Commander, U.S. Army Tank-Automotive Command, ATTN: AMSTA-MB, Warren, Ml 48397-5000. A reply will be furnished to you.

TABLE OF CONTENTS

Page

CHAPTER 1 INTRODUCTION

Section I. General Information 1-1
Section II. Equipment Description and Data.. 1-2

CHAPTER 2 OPERATING INSTRUCTIONS

Section I. Description and Use of Operator's Controls and Indicators 2-1
Section II. Operator/Crew Preventive Maintenance Checks and Services (PMCS) 2-4

• This manual supersedes TM 9-2330-213-14&P/TO 36A11-1-461, dated 30 September 1986.

TABLE OF CONTENTS (Con't)

		Page
Section III.	Operation Under Usual Conditions	2-15
Section IV.	Operation Under Unusual Conditions	2-21
CHAPTER 3	**OPERATOR MAINTENANCE**	
Section I.	Lubrication Instructions	3-1
Section II.	Operator/Crew Troubleshooting Procedures	3-7
Section III.	Operator Maintenance	3-10
CHAPTER 4	**UNIT MAINTENANCE**	
Section I.	Repair Parts; Special Tools; Test, Measurement, and Diagnostic Equipment (TMDE); and Support Equipment	4-1
Section II.	Service Upon Receipt	4-2
Section III.	Unit Preventive Maintenance Checks and Services (PMCS)	4-3
Section IV.	Organizational Troubleshooting Procedures	4-6
Section V.	General Maintenance Instructions	4-12
Section VI.	Electrical System Maintenance	4-15
Section VII.	Brake System Maintenance	4-31
Section VIII.	Wheels, Hubs, and Brakedrums Maintenance	4-76
Section IX.	Frame and Towing Attachments Maintenance	4-86
Section X.	Springs and Shock Absorbers Maintenance	4-95
Section XI.	Cargo Body Maintenance (M105 Series)	4-100
Section XII.	Water Tank Body Maintenance (M107 Series)	4-102
Section XIII.	Shop Van Body Maintenance (M448)	4-111
Section XIV.	Accessory Items Maintenance	4-144
Section XV.	Preparation for Storage or Shipment	4-147
CHAPTER 5	**DIRECT SUPPORT AND GENERAL SUPPORT MAINTENANCE**	
Section I.	Rear Axle Maintenance	5-1
Section II.	Brakedrum and Tire Maintenance	5-5
Section III.	Cargo Body Maintenance (M105 Series)	5-7
Section IV.	Water Tank Body Maintenance (M107 Series)	5-12
Section V.	Shop Van Body Maintenance (M448)	5-22
APPENDIX A	REFERENCES	A-1
APPENDIX B	**MAINTENANCE ALLOCATIO CHART**	B-1
APPENDIX C	COMPONENTS OF END ITEM AND BASIC ISSUE ITEMS LISTS	C-1
APPENDIX D	ADDITIONAL AUTHORIZATION LIST	D-1
APPENDIX E	EXPENDABLE/DURABLE SUPPLIES AND MATERIALS LIST	E-1

TABLE OF CONTENTS (Con't)

	Illus Fig	Page
APPENDIX F REPAIR PARTS AND SPECIAL TOOLS LISTS		F-1
Section I. Introduction		F-1
Section II. Repair Parts List		
GROUP 06 ELECTRICAL SYSTEM		
0609 - LIGHTS		1-1
BLACKOUT TAIL AND STOPLIGHT	1	1-1
BLACKOUT STOPLIGHT (M103A3, M105A2, M105A2C, M107A2, M107A2C, M448)	2	2-1
REAR COMPOSITE MARKER LIGHT	3	3-1
0613 - HULL OR CHASSIS WIRINQ HARNESS		
Chassis WIRING HARNESS	4	4-1
INTERVEHICULAR CABLE	5	5-1
QROUP 11 REAR AXLE		
1100-REAR AXLE ASSEMBLY		6-1
REAR AXLE	6	6-1
GROUP 12 BRAKES		
1201 - HANDBRAKES		7-1
HANDBRAKE CABLES	7	7-1
HANDBRAKE ASSEMBLY (OPTIONAL FOR MODEL M107A1)	8	8-1
1202 -SERVICE BRAKES		9-1
SERVICE BRAKES (M105A2C, M448, M103A3, M105A2, M107A2, M107A2C)	9	9-1
BRAKE RELATED COMPONENTS (M103A3, M105A2, M105A2C, M107A2, M107A2C, M448)	10	10-1
SERVICE BRAKES (M103A1, M105A1, M107A1)	11	11-1
1204 -HYDRAULIC BRAKE SYSTEM		12-1
HYDRAULIC MASTER CYLINDER AND WHEEL CYLINDER	12	12-1
HYDRAULIC LINES, HOSES, AND FITTINGS (M103A1, M103A3, M105A1, M105A2, M107A2, M107A2C, M448)	13	13-1
1205 -VACUUM SYSTEM COMPONENTS		14-1
VACUUM HYDRAULIC BRAKE SYSTEM HOSES, LINES AND FITTINGS (M105A2C)	14	14-1
VACUUM HYDRAULIC BRAKE SYSTEM TANK ASSEMBLY (M105A2C)	15	15-1
VACUUM HYDRAULIC BRAKE SYSTEM HOSE ASSEMBLY (M105A2C)	16	16-1
VACUUM HYDRAULIC BRAKE SYSTEM MASTER CYLINDER (M105A2C)	17	17-1
1208 - AIR BRAKE SYSTEM		18-1
AIR CHAMBER ASSEMBLY (M103A1, M103A3, M105A1, M105A2, M107A1, M107A2, M107A2C, M448)	18	18-1
AIRLINES, HOSES AND FITTINGS (M103A1, M103A3, M105A1, M105A2, M107A1, M107A2, M107A2C, M448)	19	19-1
EMERGENCY RELAY VALVE AND RESERVOIR (M103A3, M105A2, M107A2, M107A2C, M448)	20	20-1
GROUP 13 WHEELS AND TRACKS		
1311 - WHEEL ASSEMBLY		21-1
HUB AND DRUM ASSEMBLY (M103A3, M105A2, M105A2C, M107A2, M107A2C, M448)	21	21-1
HUB AND DRUM ASSEMBLY (M103A1 ,M105A1, M107A1)	22	22-1

TABLE OF CONTENTS (Con't)

	Illus Fig	Page
1313 -TIRES AND TUBES		23-1
TIRE AND TUBE	23	23-1
GROUP 15 FRAME AND TOWING ATTACHMENTS		
1503 - TOWING ATTACHMENTS		24-1
DRAWBAR RINF AND SAFETY CHAIN	24	24-1
1507 - LANDINF GEAR, LEVELING JACKS		25-1
SUPPORT LEG (M105A1, M105A2)	25	25-1
ADJUSTABLE CASTER ASSEMBLY	26	26-1
LEVELING SUPPORT JACK ASSEMBLY (M448)	27	27-1
GROUP 16 SPRINGS AND SHOCK ABSORBERS		
1601 - SPRINGS		28-1
MAIN AND AUXILIARY SPRINGS	28	28-1
GROUP 18 BODY		
1802 - FENDERS		29-1
WATER TANK FENDERS AND EXTENSIONS (M107A1, M107A2, M107A2C)	29	29-1
1810 - CARGO BODY		30-1
CARGO BODY, RACKS, AND RELATED PARTS (M105A2C, M105A1, M105A2)	30	30-1
1811 - TANK BODIES		
VALVE AND PIPING ASSEMBLY (M107A1, M107A2, M107A2C)	31	31-1
HALF-INCH AND ONE-INCH FAUCET ASSEMBLY (M107A1, M107A2, M107A2C)	32	32-1
FAUCET ASSEMBLY (M107A1, M107A2, M107A2C)	33	33-1
WATER TANK, TANK FRAME, AND RELATED PARTS (M107A1, M107A2, M107A2C)	34	34-1
1812 - SPECIAL PURPOSE BODIES		35-1
110-VOLT ELECTRICAL SYSTEM (M448)	35	35-1
VAN BODY ATTACHING HARDWARE (M448)	36	36-1
VAN BODY REAR DOOR SEAL ASSEMBLY (M448)	37	37-1
VAN BODY DOOR ASSEMBLY (M448)	38	38-1
VAN BODY SIDE ASSEMBLY (M448)	39	39-1
VAN BODY LEFT DOOR ASSEMBLY (M448)	40	40-1
VAN BODY RIGHT DOOR ASSEMBLY (M448)	41	41-1
VAN BODY BRACKET ASSEMBLY (M448)	42	42-1
LOWER SIDE DOOR ASSEMBLY BATTERY SHOP VAN (M448)	43	43-1
GROUP 22 BODY AND CHASSIS ACCESSORY ITEMS		
2201 - CANVAS ITEMS		44-1
PAULIN (M105A1, M105A2, M105A2C)	44	44-1
2202 - ACCESSORY ITEMS		45-1
REFLECTORS (M105A2, M105A2C, M448)	45	45-1
2210 - DATA PLATES		46-1
DATA PLATES	46	46-1

TABLE OF CONTENTS (Con't)

	Illus Fig	Page
GROUP 94 REPAIR KITS		
9401 - REPAIR KITS		KIT-1
REPAIR KITS	KIT	KIT-1
GROUP 95 GENERAL USE STANDARDIZED PARTS		
9501 - BULK MATERIEL		BULK-1
BULK MATERIEL	BULK	BULK-1
Section III. Special Tools List		
2604 - SPECIAL TOOLS		47-1
SPECIAL TOOLS	47	47-1
Section IV. Cross-reference Indexes		
NATIONAL STOCK NUMBER INDEX		I-1
PART NUMBER INDEX		I-8
FIGURE AND ITEM NUMBER INDEX		I-25
APPENDIX G ILLUSTRATED LIST OF MANUFACTURED ITEMS		G-1
APPENDIX H TORQUE LIMITS		H-1
INDEX		Index 1

CHAPTER 1
INTRODUCTION

Section I. GENERAL INFORMATION

Paragraph Title	Page Number
Destruction of Army Materiel to Prevent Enemy Use	1-1
Maintenance Forms, Records, and Reports	1-1
Preparation for Storage or Shipment	1-1
Reporting Equipment improvement Recommendations (EIRs)	1-1
Scope	1-1

1-1. SCOPE.

a. This manual describes the operation and unit, direct support, and general support maintenance, including repair parts and special tools lists for:

- Trailer, Cargo: 1 1/2-Ton, 2-Wheel, M105A1 with trailer chassis M103A1.
- Trailer, Cargo: 1 1/2-Ton, 2-Wheel, M105A2 with trailer chassis M103A3.
- Trailer, Cargo: 1 1/2-Ton, 2-Wheel, M105A2C (with vacuum/hydrauilc brake system).
- Trailer, Tank, Water: 1 1/2-Ton, 2-Wheel, 400-Gallon, M107A1 (with single line air/hydraulic brake system).
- Trailer, Tank, Water: 1 1/2-Ton, 2-Wheel, 400-Gallon, M107A2 and M107A2C (with dual line air/ hydraulic brake system).
- Trailer, Van, Shop: Folding sides, 1 1/2-Ton, 2-Wheel, M448 with trailer chassis M103A3.

b. Throughout the manual, the terms “right” and “left” are used to describe views of the trailers, as viewed from the rear.

1-2. MAINTENANCE FORMS, RECORDS, AND REPORTS.

Department of the Army forms and procedures used for equipment maintenance will be those prescribed by DA Pam 738-750, The Army Maintenance Management System (TAMMS).

1-3. DESTRUCTION OF ARMY MATERIEL TO PREVENT ENEMY USE.

For destruction of Army materiel to prevent enemy use, refer to TM 750-244-6.

1-4. PREPARATION FOR STORAGE OR SHIPMENT.

For information on preparing the trailers for storage or shipment, refer to Chapter 4, Section XV.

1-5. REPORTING EQUIPMENT IMPROVEMENT RECOMMENDATIONS (EIRs).

if your trailer needs improvement, let us know, Send us an EIR. You, the user, are the only one who can tell us what you don’t like about your equipment. Let us know why you don’t like the design. Put it on an SF 368 (Quality Deficiency Report). Mail it to us at: Commander, U. S. Tank-Automotive Command, ATTN: AMSTA-MP, Warren, MI 48937-5000. We will send you a reply.

Section II. EQUIPMENT DESCRIPTION AND DATA

Paragraph Title	Page Number
Differences Between Models	1-9
Equipment Characteristics, Capabilities, and Features	1-2
Equipment Data	1-9
Location and Contents of Plates	1-8
Location and Description of Major Components	1-3

1-6. EQUIPMENT CHARACTERISTICS, CAPABILITIES, AND FEATURES.

a. The M103A1 and M103A3 chassis are used with the following:

(1) Cargo Trailer Series M105A1, M105A2, and M105A2C. Carry a maximum payload of 3000 lb (1362 kg) either cross-country or highway.

(2) Water Tank Series M107A1, M107A2, and M107A2C. Transport water with a maximum payload of 3335 lb (1514 kg) either cross-country or highway.

(3) Folding Side Shop Van Trailer M448. Equipped with a 110-volt electrical system and is used as a mobile battery or paint shop. The M448 has a maximum payload of 3000 lb (1362 kg) either cross-country or highway.

b. The trailers are designed to be towed by the M35 2 1/2-Ton Cargo Truck. Maximum allowable speed is 50 mi/h (80 km/h) highway and 30 mi/h (48 km/h) cross-country.

c. The trailers are equipped with:

(1) A 24-volt electrical system capable of operating under standard and blackout modes,

(2) An adjustable caster assembly to support front of trailer when uncoupled from the towing vehicle.

(3) An automatic emergency braking in the event of trailer breakaway from the towing vehicle.

(4) Manually operated parking brakes used to secure the trailer when stopped or parked.

(5) Two-wheel single axle with leaf spring suspension to absorb road shock.

NOTE

All models of the M103 Series Chassis built after 1977 have two air lines.

(6) Single-line air/hydraulic (M103A1 and M107A1), dual-line air/hydraulic (M103A3, M107A2, and M107A2C), or vacuum/hydraulic brake system (M105A2C) which receives air or vacuum pressure from the towing vehicle.

1-7. LOCATION AND DESCRIPTION OF MAJOR COMPONENTS

a. **M103 Series Chassis Trailer.**

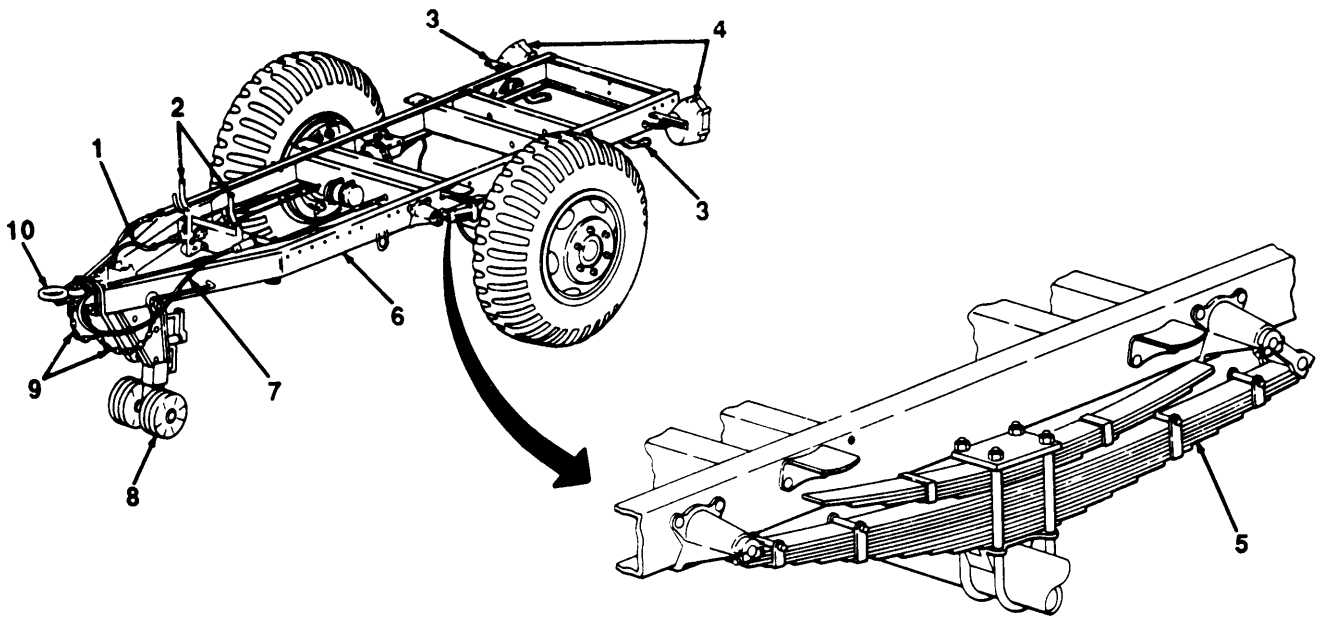

Key	Component	Description
1	Intervehicular Cable	Connects trailer electrical system to the towing vehicle.
2	Handbrake Levers (All Except M107A1)	Used to activate the handbrakes when the trailer is stopped or parked.
3	Handbrake Levers (M107A1)	Used to activate the handbrakes when the trailer is stopped or parked.
4	Light Assemblies	Consist of blackout, tall, and composite lights, indicate presence of trailer to vehicles traveling behind.
5	Leaf Spring	Component of suspension system which serves to cushion road shock.
6	Frame Assembly	Composed of two pressed-steel siderails reinforced by six pressed-steel crossmembers. Serves to support the trailer load.
7	Intervehicular Air Hose(s)	Connect(s) trailer service brake system to the towing vehicle.
8	Adjustable Caster Assembly	Supports front of trailer when not coupled to the towing vehicle.
9	Safety Chains	Hook to eyebolts on towing vehicle to prevent the trailer from fully breaking away.
10	Drawbar Ring	Used to couple trailer to towing vehicle pintle.

TA505223

1-7. LOCATION AND DESCRIPTION OF MAJOR COMPONENTS (Con't).

b. M105 Series Cargo Trailer.

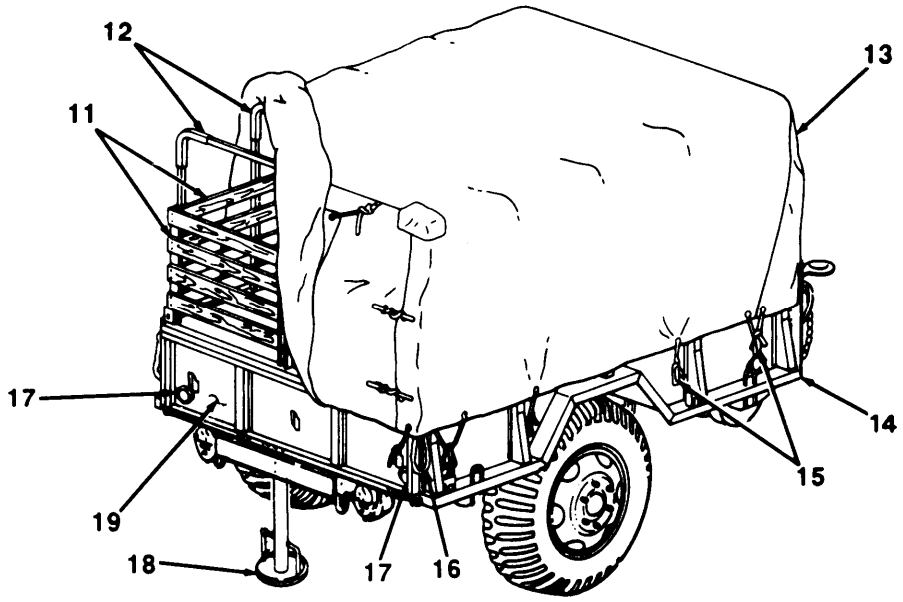

Key	Component	Description
11	Stake Racks	Verticality extend the cargo body to provide a larger cargo area.
12	Roof Bows	Provide support for paulin.
13	Paulin	Used to protect cargo from inclement weather.
14	Cargo Body	One-piece welded construction used to carry a maximum payload of 3000 lb (1362 kg). Left- and right-side body walls have stake pocket holes for mounting of stake racks.
15	Lashing Hooks	Attach paulin to the cargo body.
16	Tailgate Chains	Support the tailgate when open and lock the tailgate closed.
17	Reflectors	indicate trailer presence to vehicles traveling behind.
18	Rear Support Leg	Stabilizes rear of cargo body.
19	Tailgate	Provides access to trailer cargo.

TA505224

1-7. LOCATION AND DESCRIPTION OF MAJOR COMPONENTS (Con't).

c. M107 Series Water Tank Trailer.

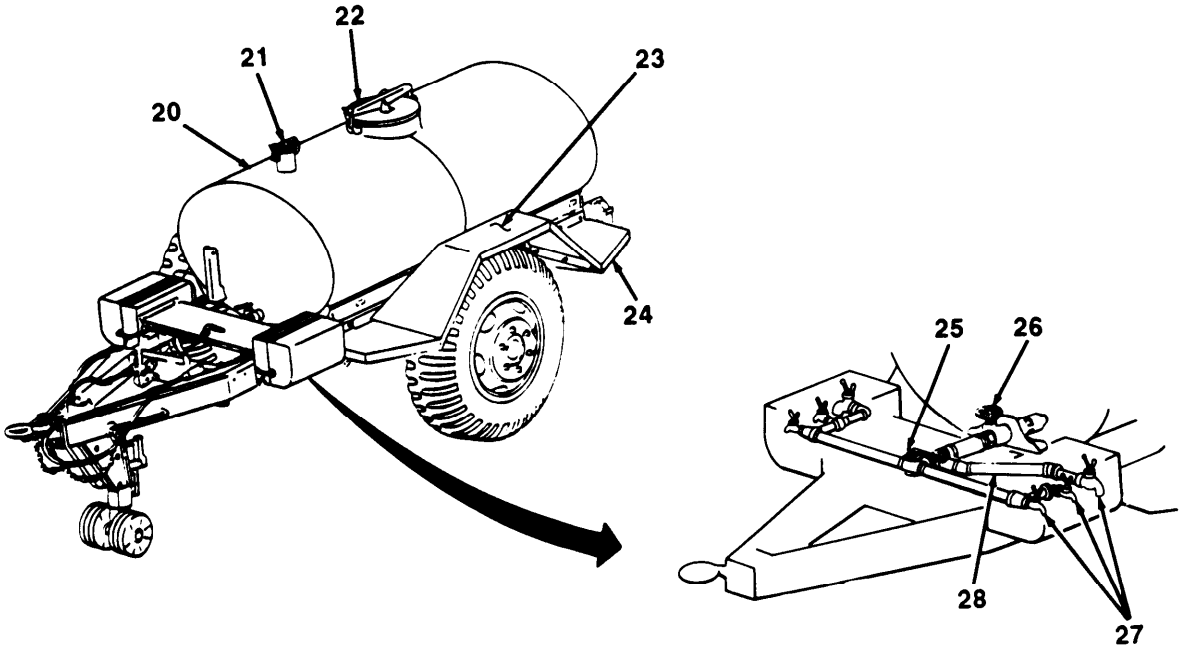

Key	Component	Description
20	Tank	Holds 400 gal. (1514 l) of water for transport.
21	Vent	Allows air circulation in tank.
22	Manhole	Provides access to the tank interior for filling, cleaning, and inspection.
23	Fender	Protects tires, tank, and vehicles traveling behind from thrown dirt or stones.
24	Fender Extension	Used as a step for access to manhole and vent.
25	Manifold Valve	Directs flow of water to the faucets.
26	Discharge Valve	Allows distribution of water from the tank through the piping.
27	Faucets	Allow for dispensing water contained in the tank.
28	Piping	Provides passageway for water from the tank to the faucets.

TA505225

1-7. LOCATION AND DESCRIPTION OF MAJOR COMPONENTS (Con't).

d. M448 Shop Van Trailer.

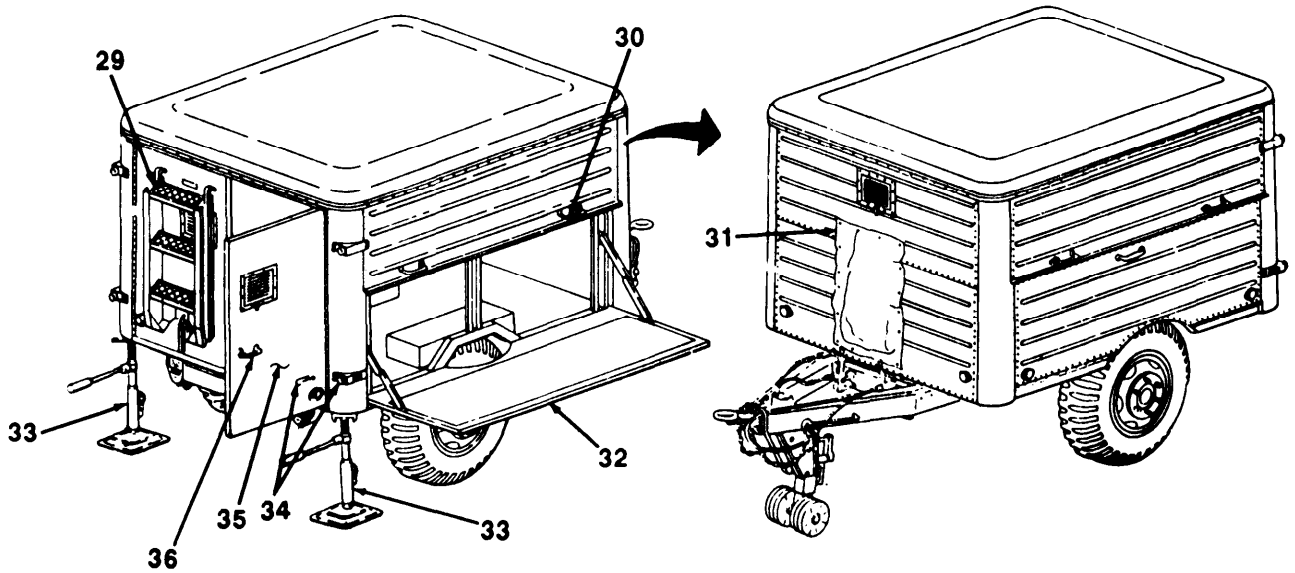

Key	Component	Description
29	Ladder	Provides access to the shop van body.
30	Side Door Latch Handle	Locks the side door closed.
31	Canvas Cover	Protects the battery generating unit when not in use.
32	Side Door	Swings down for use as a work area.
33	Leveling Jacks	Stabilize rear of the trailer.
34	Rear Door Hold-open Clip and Retainer	Holds rear door in open position.
35	Rear Door	Opens to provide access to inside of the shop van.
36	Locking Handle	Operates the door latch mechanism to open and close right rear door.

TA505226

1-7. LOCATION AND DESCRIPTION OF MAJOR COMPONENTS (Con't).

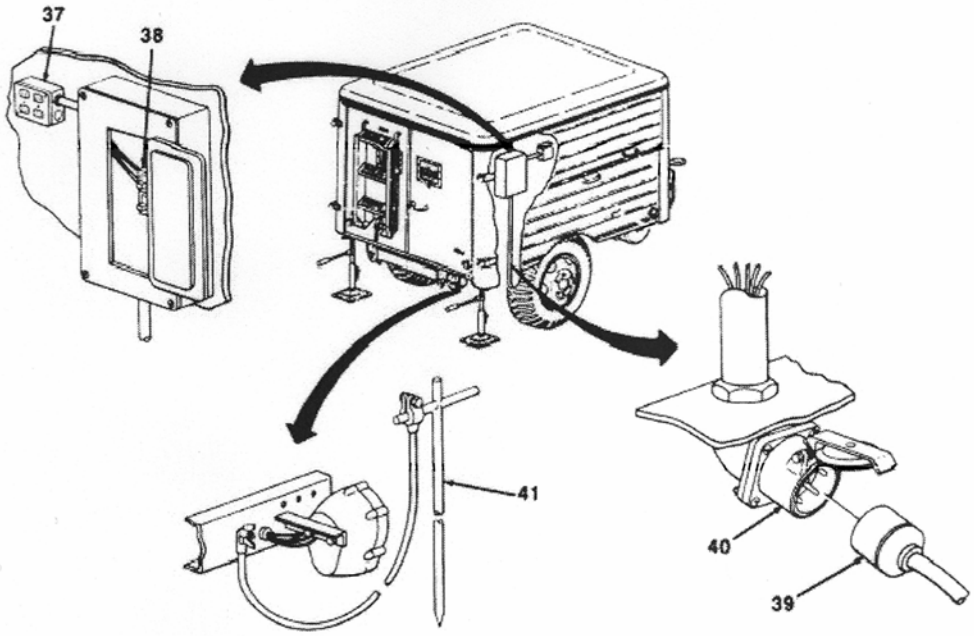

Key	Component	Description
37	Junction Box	Contains four receptacles which provide 110-volt power supply to the operator.
38	Circuit Breaker	Protects the electrical system and equipment from damage in case of a power overload.
39	11 O-volt Auxiliary Power Cable	Connects auxiliary power source to 110-volt electrical system.
40	11 O-volt Receptacle	Connects 110-volt auxiliary power cable to the trailer electrical system.
41	Ground Rod	Grounds the trailer when 110-volt electrical system is in use. Protects personnel from serious electric shock.

TA606227

1-8. LOCATION AND CONTENTS OF PLATES.

a. The following illustration shows the location and contents of all chassis trailer plates.

b. Maintain all plates so that all information remains legible. If any plate is missing or no longer legible, notify unit maintenance.

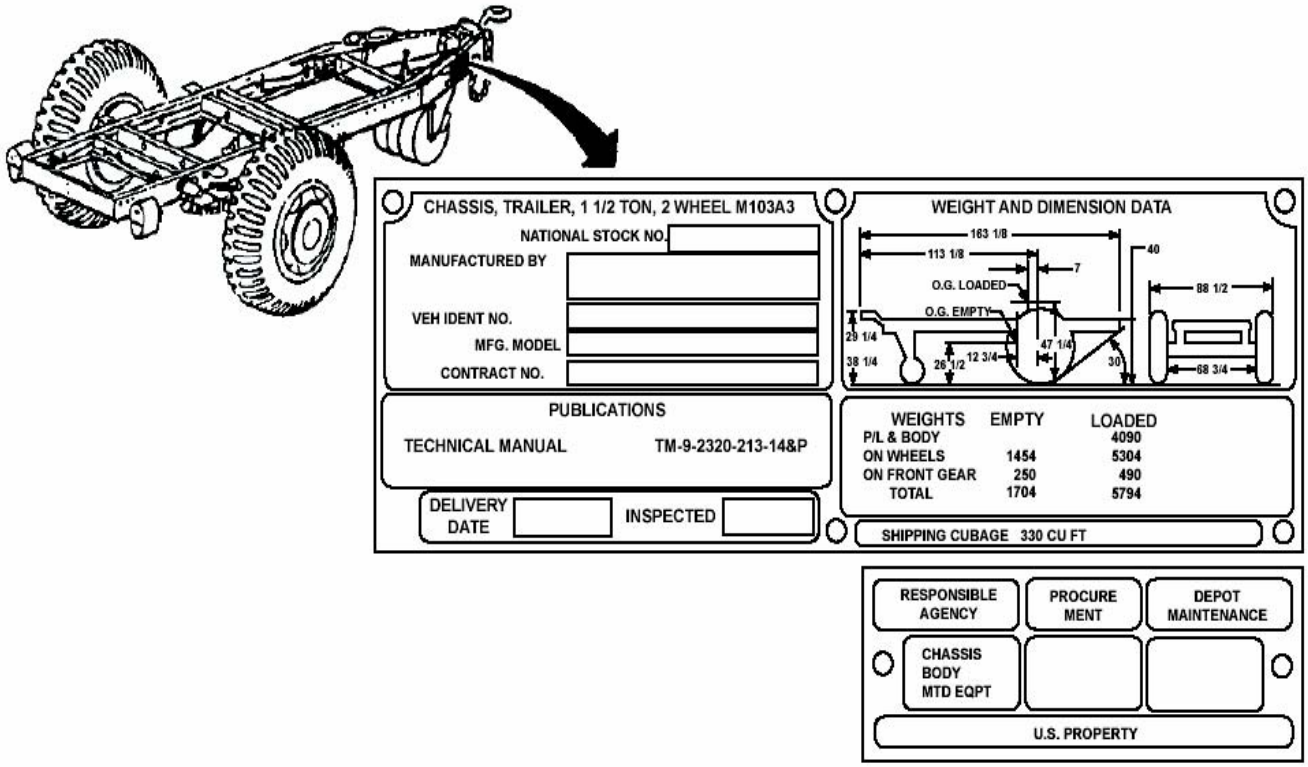

1-9. DIFFERENCES BETWEEN MODELS

Component	M103A1	M103A3	M105AC2	M107A1	M107A21 M107A2C
Electrical System:					
24-volt Electrical System	x	x	x	x	x
Lights:					
Blackout, Taillight, and Stoplight	x			x	
Blackout, Taillight, and Service Stoplight	x			x	
Blackout Stoplight		x	x		x
Blackout and Service Taillight, and Service Stoplight (two each)		x	x		x
Composite Light	x	x	x	x	x
Brake System:					
Single Line Air/Hydraulic	x			x	
Dual Line Air/Hydraulic		x			x
Vacuum/Hydraulic			x		

1-10. EQUIPMENT DATA.

MI05 Series Cargo Trailer

Dimensions (Inside):

Height:

To Top of Side Panels ……1ft 6 in. (46 cm)
To Top of Stack Racks …….. 3 ft 9 in. (114 cm)
To Underside of Roof Bows …….. 5 ft (152 cm)

Length:

Body ……..9 ft 2 in. (279 cm)
Stake Rack …… 9 ft 3 in. (282 cm)

Width:

Body ……6 ft 2 in. (188 cm)
Stake Rack ……6 ft 1 in. (185 cm)

Dimensions (Overall):

Height, Less Paulin (empty) ……8 ft 2 in. (249 cm)
Length ……13 ft 9 ½ in. (420 cm)
Width ……7 ft 4 ½ in. (225 cm)

Drawbar Ring (adjustable) ……30 ¼ in. or 34 ½ in. (77 cm or 87 cm)

1-10. EQUIPMENT DATA (Con't).

M105 Series Cargo Trailer (Con't)

Weights:

Payload Maximum:

Cross-country	3000 lb (1362 kg)
Highway	3000 lb (1362 kg)
Vehicle (net)	2694 lb (1203 kg)

Total:

Cross-country	5694 lb (2585 kg)
Highway	5694 lb (2585 kg)

Tires:

Size	9:00-20
Inflation:	
Radial Tire (All Surfaces)	95 psi (656 kPa)
Highway	50 psi (345 kPa)
Cross-country	35 psi (241 kPa)
Sand	25 psi (172 kPa)

Towing Vehicle	M35

M107 Series Water Tank Trailer

Tank Capacity 400-gal. (15141)

Dimensions (overall):

Height (to top of manhole cover)	6 ft 43/4 in. (195 cm)
Length	13 ft 71/8 in. (414cm)
Width	7 ft 4 1/2 in. (225 cm)
Drawbar Ring (adjustable)	30 1/4 in. or 34 1/4 in. (77 cm or 87 cm)

Weights:

Payload Maximum:

Cross-country	3360 lb (1525 kg)
Highway,	3360 lb (1525 kg)
Vehicle (net)	2324 lb (1055 kg)

Tires:

Size	9:00-20
Inflation:	
Radial Tire (All Surfaces)	95 psi (656 kPa)
Highway	50 psi (345 kPa)
Cross-country	35 psi (241 kPa)
Sand	25 psi (172 kPa)

Towing Vehicle	M35

1-10. EQUIPMENT DATA (Con't).

M448 Shop Van Trailer

Dimensions (overall):

Height (empty)	8 ft 5 5/8 in. (258 cm)
Length	13 ft 9 1/2 in. (420 cm)
Width	7 ft 7 in. (231 cm)
Van Body Over Chassis	5 ft 6 in. (168 cm)

Weights:

Payload Maximum:	
Cross-count	3000 lb (1362 kg)
Highway	3000 lb (1362 kg)
On Wheels:	
Empty	2669 lb (1212 kg)
Cross-count.	5669 lb (2574 kg)
Highway	5669 lb (254 kg)
On Front Landing Leg:	
Empty	335 lb (152 kg)
Cross-country	520 lb (236 kg)
Highway	520 lb (236 kg)
Total:	
Empty	3004 lb (1364 kg)
Cross-country	6189 lb (2810 kg)
Highway	6189 lb (2810 kg)

Drawbar Ring (adjustable)	30 1/4 in. or 34 1/4 in. (77 cm or 87 cm)
Shipping Cubage	863 cu ft. (24 cu m)

Tires:

Size	9:00-20
Inflation:	
Radial Tire (All Surfaces)	95 psi (656 kPa)
Highway	50 psi (345 kPa)
Cross-country	35 psi (241 kPa)
Sand	25 psi (172 kPa)

Towing Vehicle	M35

M103A3 Radial Tire Configuration

Dimensions:

Height	40 in. (102 cm)
Length	163 1/8 in. (415 cm)
Width	7 ft 4 ½ in. (225 cm)
Tire PSI	330 cu. ft.

CHAPTER 2
OPERATING INSTRUCTIONS

Section I. DESCRIPTION AND USE OF OPERATOR'S CONTROLS AND INDICATORS

Paragraph Title	Page Number
Controls and Indicators	2-1
General	2-1

2-1. GENERAL.

This section shows the location and function of all trailer controls and indicators. Review this section thoroughly before operating the trailer.

2-2. CONTROLS AND INDICATORS.

a. **M103 Series Chassis Trailer.**

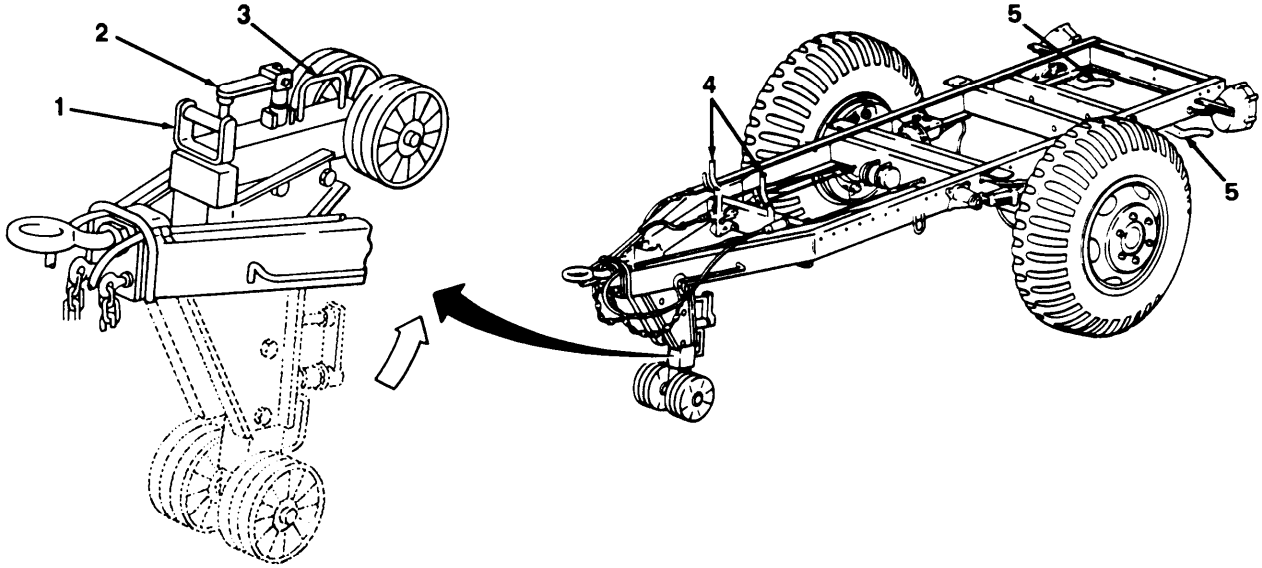

Key	Control or Indicator	Description
1	Release Handle	Secures the adjustable caster assembly in up or down position.
2	Handcrank	Operates the gearbox to raise or lower the adjustable caster assembly.
3	Ground Pad Handle	Used to raise or lower the adjustable caster assembly.
4	Handbrake Levers (all except M107A1)	Used to activate handbrakes when the trailer is stopped or parked.
5	Handbrake Levers (M107A1)	Used to activate handbrakes when the trailer is stopped or parked.

TA505229

2-2. CONTROLS AND INDICATORS (Con't).

b. M107 Series Water Tank Trailer.

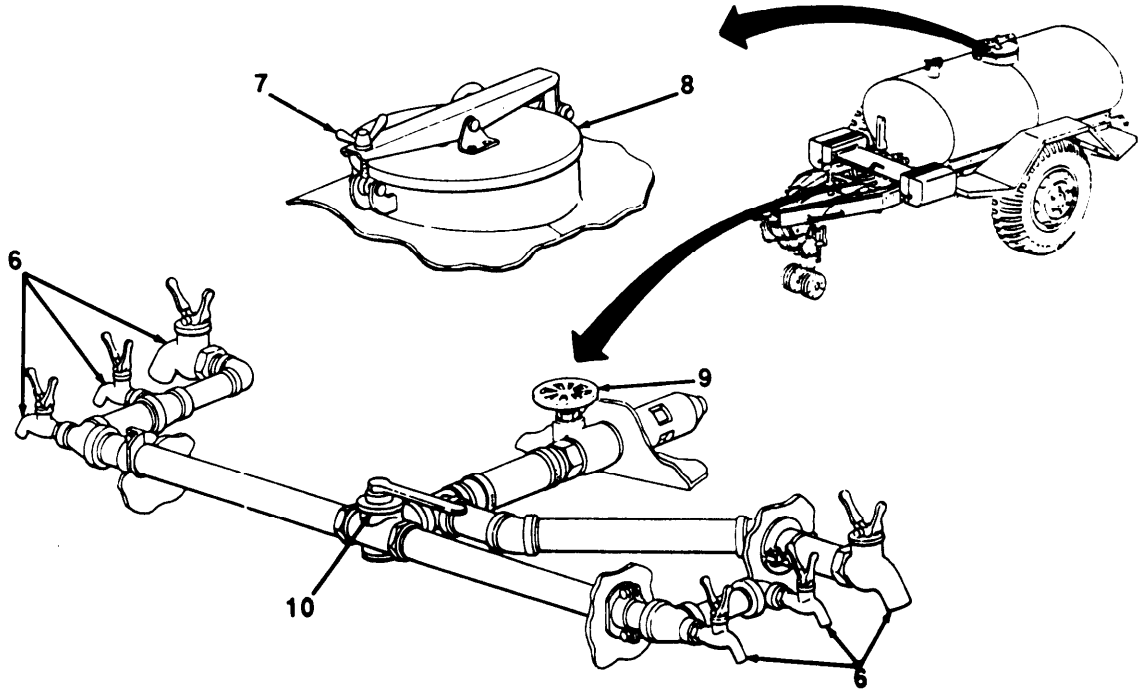

Key	Control or Indicator	Description
6	Faucets	Used to draw water from the tank.
7	Manhole Cover Latch	Secures the manhole cover closed.
8	Manhole Cover	Provides access to the tank body for filling, cleaning, and inspection.
9	Discharge Valve	Opens the tank for water distribution through the piping.
10	Manifold Valve	Directs water to the faucets.

TA505230

2-2. CONTROLS AND INDICATORS (Con't).

c. M448 Shop Van Trailer.

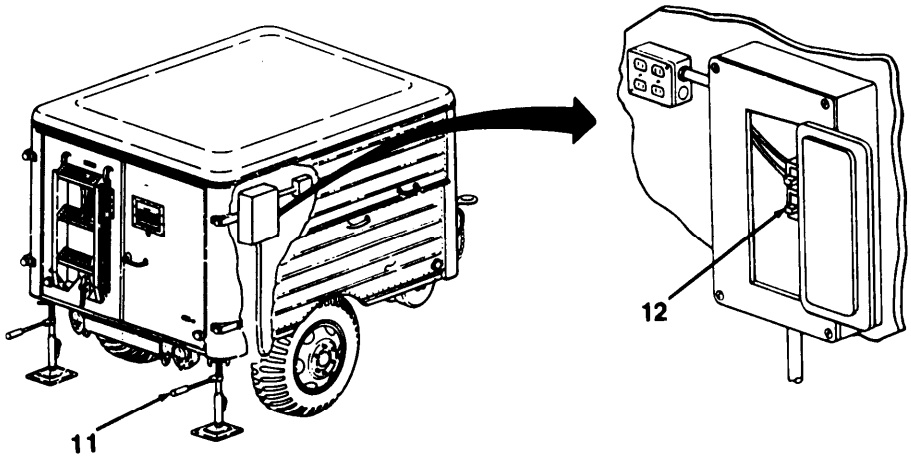

Key	Control or Indicator	Description
11	Handle Assembly	Used to raise or lower the leveling jack.
12	Circuit Breaker Switch	Allows electrical power to reach the receptacles.

TA505231

Section II. OPERATOR/CREW PREVENTIVE MAINTENANCE CHECKS AND SERVICES (PMCS)

Paragraph Title	Page Number
General	2-4
General PMCS Procedures	2-4
Leakage Definitions	2-5
Operator/Crew Preventive Maintenance Checks and Services (PMCS), Table 2-1	2-6
Reporting Repairs	2-4
Service Intervals	2-4
Specific PMCS Procedures	2-5

2-3. GENERAL.

a. To ensure that the M105 and M107 Series Trailers and M448 Shop Van are ready for operation at all times, they must reinspected on a regular basis so that defects may be found before they result in serious damage, equipment failure, or injury to personnel. This section contains systematic instructions on inspections, adjustments, and corrections to be performed by the operator/crew.

b. While performing PMCS, read and follow all safety instructions found in the Warning Summary at the front of this manual. Keep in mind all WARNINGS and CAUTIONS.

2-4. SERVICE INTERVALS.

Perform PMCS, found in Table 2-1, at the following intervals:

(1) Perform Before (B) PMCS just before operating the trailer.

(2) Perform During (D) PMCS while operating the trailer,

(3) Perform After (A) PMCS right after operating the trailer,

2-5. REPORTING REPAIRS.

All defects which the operator cannot fix must be reported on a DA Form 2404, Equipment Inspection and Maintenence Worksheet, immediately after completing PMCS. If a serious problem is found, IMMEDIATELY report it to your supervisor.

2-6. GENERAL PMCS PROCEDURES.

WARNING

Dry cleaning solvent P-D-680 is toxic and flammable. Always wear protective goggles and gloves, and use only in a well-ventilated area. Avoid contact with skin, eyes, and clothes, and DO NOT breathe vapors. DO NOT use near open flame or excessive heat. The solvent's flash point is 100°F-130°F (38°C-59°C). If you become dizzy while using cleaning solvent, immediately get fresh air and medical help. if solvent contacts eyes, immediately wash your eyes and get medical aid.

a. Keep equipment clean. Dirt, oil, and debris may cover up a serious problem. Clean as you work and as needed. Use dry cleaning solvent (Item 6, Appendix E) on all metal surfaces, Use soap (Item 5, Appendix E) and water on rubber, plastic, and painted surfaces.

2-6. GENERAL PMCS PROCEDURES (Con't).

b. While performing specific PMCS procedures, inspect the following components:

(1) Bolts, Nuts, and Screws. Ensure that they are not loose, missing, bent, or broken. Report loose or missing bolts, nuts, and screws to unit maintenance.

(2) Welds. Inspect for gaps where parts are welded together. Check for loose or chipped paint, rust, and cracks. Report bad welds to unit maintenance.

(3) Electric Conduit, Wires, or Connectors. Inspect for cracked or broken conduit insulation, bare wires, and loose or broken connectors. Report loose connections and faulty wiring to unit maintenance.

(4) Hoses, Lines, and Fittings. Inspect for wear, damage, and leaks. Ensure that clamps and fittings are tight. Report any damage, leaks, or loose fittings and clamps to unit maintenance.

c. Check that components are adequately lubricated in accordance with Chapter 3, Section I.

2-7. SPECIFIC PMCS PROCEDURES.

a. Operator/crew PMCS are provided in Table 2-1. Always perform PMCS in the order listed. Once it becomes a habit, anything that is not right can be spotted in a minute.

b. Before performing PMCS, read all the checks required for the applicable interval and prepare all the tools needed. Have several clean rags (Item 11, Appendix E) handy. Perform ALL inspections at the applicable interval.

c. if anything wrong is discovered through PMCS, perform the appropriate troubleshooting task in Chapter 3, Section Il. If any component or system is not serviceable, or if a given service does not correct the problem, notify your supervisor.

d. The columns in Table 2-1 are defined as follows:

(1) Item No. Provides a logical sequence for PMCS to be performed and is used as a source of item numbers for the “TM ITEM NO” column when recording PMCS results on DA Form 2404.

(2) Interval. Specifies the interval at which PMCS is to be performed.

(3) Item To Be inspected. Lists the system and common name of items that are to be inspected. included in this column are specific servicing, inspection, replacement, or adjustment procedures to be followed.

NOTE

The terms “ready/available” and “mission-capable” refer to the same stahtus: Equipment is on hand and is able to perform its combat missions (AR 700-138).

(4) Equipment is Not Ready/Available If: Explains when the trailer is nonmission-capable.

2-8. LEAKAGE DEFINITIONS.

a. it is important to know how fluid leakage affects the status of the trailer. Following are types/classes of leakage an operator must know to determine whether the trailer is mission-capable. Learn these leakage definitions. When in doubt, notify your supervisor.

2-8. LEAKAGE DEFINITIONS (Con't).

Leakage Deilnitions for Crew/Operator PMCS

Class I	Seepage of fluid (as indicated by wetness or discoloration) not great enough to form drops.
Class II	Leakage of fluid great enough to form drops, but not great enough to cause drops to drip from item being inspected.
Class Ill	Leakage of fluid great enough to form drops that fall from item being inspected.

CAUTION

When operating with Class I or II leaks, continue to check fluid levels in addition to that required in PMCS, Parts without fluid will stop working or may be damaged.

b. Equipment operation is allowed with minor (Class I or II) Leakage. Fluid leveis in an item/system affected with such leakage must be checked more frequently than required in PMCS. When in doubt, notify your supervisor.

c. Report Class Ill leaks IMMEDIATELY to your supervisor.

Table 2-1. Operator/Crew Preventive Maintenance Checks and Services (PMCS).

B - Before D - During A - After

ITEM NO.	INTERVAL B	INTERVAL D	INTERVAL A	ITEM TO BE INSPECTED PROCEDURE: Check for I nd have repaired, filled or adjusted as needed.	Equipment Is Not Ready/Available If:
1				WHEELS AND TIRES	
				WARNING DO NOT attempt to seat a Iockring when tire is inflated, Improperly seated Iockring could fly off. Serious injury or death will result.	
	•			a. Check for proper mounting of wheel assembly Iockring.	Lockring not properly seated.
			•	b. Remove any glass, nails, or other debris imbedded in tread.	
	•			c. Check tires for obvious damage such as cuts, bruises, bulges, and flats.	Unserviceable.
	•			d. Check for proper tire pressure (para 1-10).	Tire will not hold air pressure,
2				FRAME AND SUSPENSION	
	•			Check for cracks and broken welds.	Cracks or broken welds present.

Table 2-1. Operator/Crew Preventive Maintenance Checks and Services (PMCS) (Con't).

B - Before D - During A - After

ITEM NO.	INTERVAL B	INTERVAL D	INTERVAL A	ITEM TO BE INSPECTED PROCEDURE: Check for and have repaired, filled or adjusted as needed.	Equipment Is Not Ready/Available If:
3				**LIGHTS AND REFLECTORS**	
	•			a. Check for obvious damage and loose lights, lenses, and reflectors.	
	•			b. Check for proper operation.	
4				**ADJUSTABLE CASTER ASSEMBLY**	
	•			a. Check adjustable caster assembly (2) for proper mounting, alinement, and general condition.	Release handle (1) damaged or not properly mounted.
	•			b. If cargo trailer is equipped with an old-style, single-wheel adjustable caster assembly, check that locking pin area of handle is free of dirt and debris and that locking pin works freely. If locking pin does not work freely, clean thoroughly and apply lubricant (Chapter 3, Section 1)	

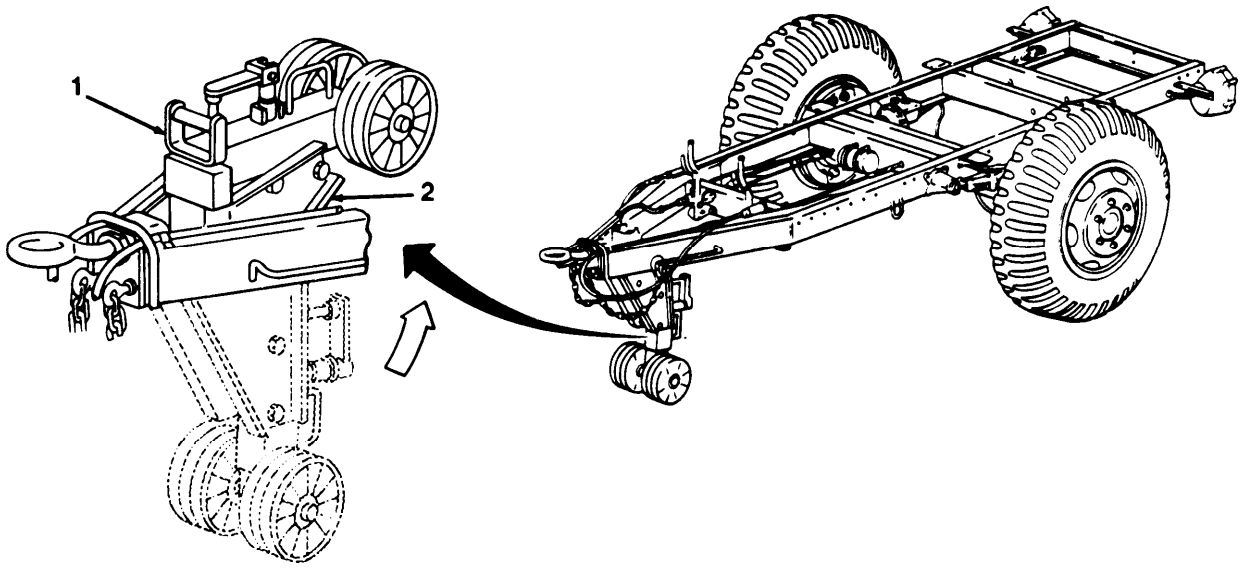

5				**INTERVEHICULAR CABLE**	
	•			Check general condition of intervehicular cable and plug.	

TA505232

Table 2-1. Operator/Crew Preventive Maintenance Checks and Services (PMCS) (Con't).

B - Before D - During A . After

ITEM NO.	INTERVAL B	INTERVAL D	INTERVAL A	ITEM TO BE INSPECTED PROCEDURE: Check for and have repaired, filled or adjusted as needed.	Equipment is Not Ready/Available If:
6				**BRAKE SYSTEM** **NOTE** Perform step a for M105A2C only.	
	•			a. Check for brake fluid leakage from master cylinder (3), hydraulic brake lines (5), fittings, and hydraulic tank (4).	Class Ill leakage is found,
	•			b. Perform operational air leak check (para 3-7). **NOTE** • Perform step c for all models except M105A2C. • Trailer Chassis Model M103A3 has a dual line air/hydraulic brake system. Both right and left sides and emergency relay valve must be inspected.	Air leaks are found.
	•			c. Check air lines (8), intervehicular air hoses (6), fittings, air filter (7), and airbrake chamber (9) for leaks and general condition.	

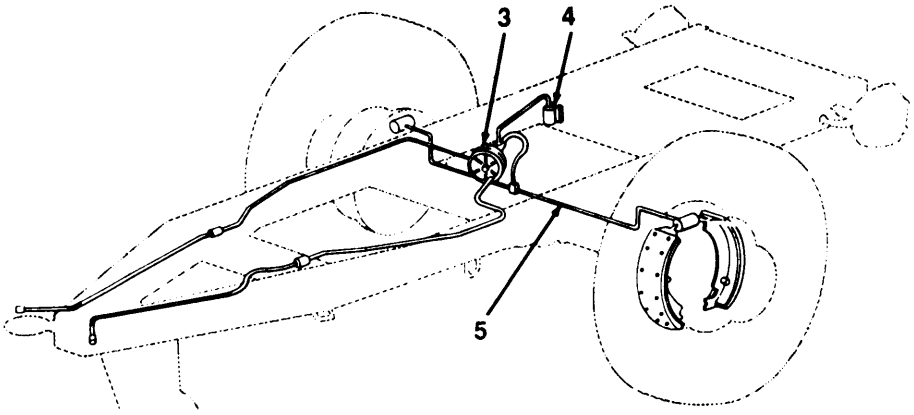

TA505233

Table 2-1. Operator/Crew Preventive Maintenance Checks and Services (PMCS) (Con't).

B - Before D - During A - After

ITEM NO.	INTERVAL B	INTERVAL D	INTERVAL A	ITEM TO BE INSPECTED PROCEDURE: Check for and have repaired, filled or adjusted as needed.	Equipment Is Not Ready/Available If:
				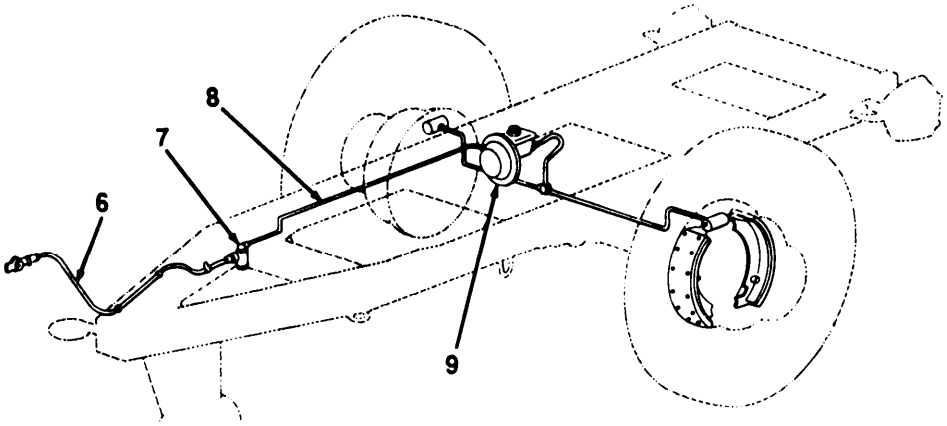	
				WARNING **Cautiously feel each wheel hub and brakedrum. Wheel hubs or brakedrums may be hot. Failure to follow this warning may result in burns.**	
			•	d. Cautiously feel each wheel hub and brakedrum. Check for a wheel hub or brakedrum that is hotter or cooler than the other. Overheating could indicate improperly adjusted or defective wheel bearings, or a locked-up brake. A cool wheel hub and brakedrum could indicate an inoperative brake. IMMEDIATELY report any abnormal conditions to unit maintenance.	Brakedrum or hub is excessively hot or cool.
		•		e. Check for proper operation of service brakes.	Brakes do not operate properly.
			•	f. On M103A3 drain air reservoir.	

TA505234

Table 2-1. Operator/Crew Preventive Maintenance Checks and Services (PMCS) (Con't).

B - Before D - During A - After

ITEM NO.	INTERVAL B	INTERVAL D	INTERVAL A	ITEM TO BE INSPECTED PROCEDURE: Check for and have repaired, filled or adjusted as needed.	Equipment is Not Ready/Available If:
	•			g. Check for proper operation of handbrake lever (10 or 11).	
				NOTE **Perform step h for all models except M107A1.**	
	•			h. Check for proper adjustment of handbrake lever (11). Handbrake lever is properly adjusted when additional force is required to move handbrake lever beyond two-thirds distance of travel toward the applied position (para 3-6).	
7				**M105 SERIES CARGO TRAILER**	
	•			a. Check that stake racks (14) and roof bows (12) are properly installed and not broken or damaged.	
	•			b. Check that paulin (13) is not torn or damaged and is properly tied down.	

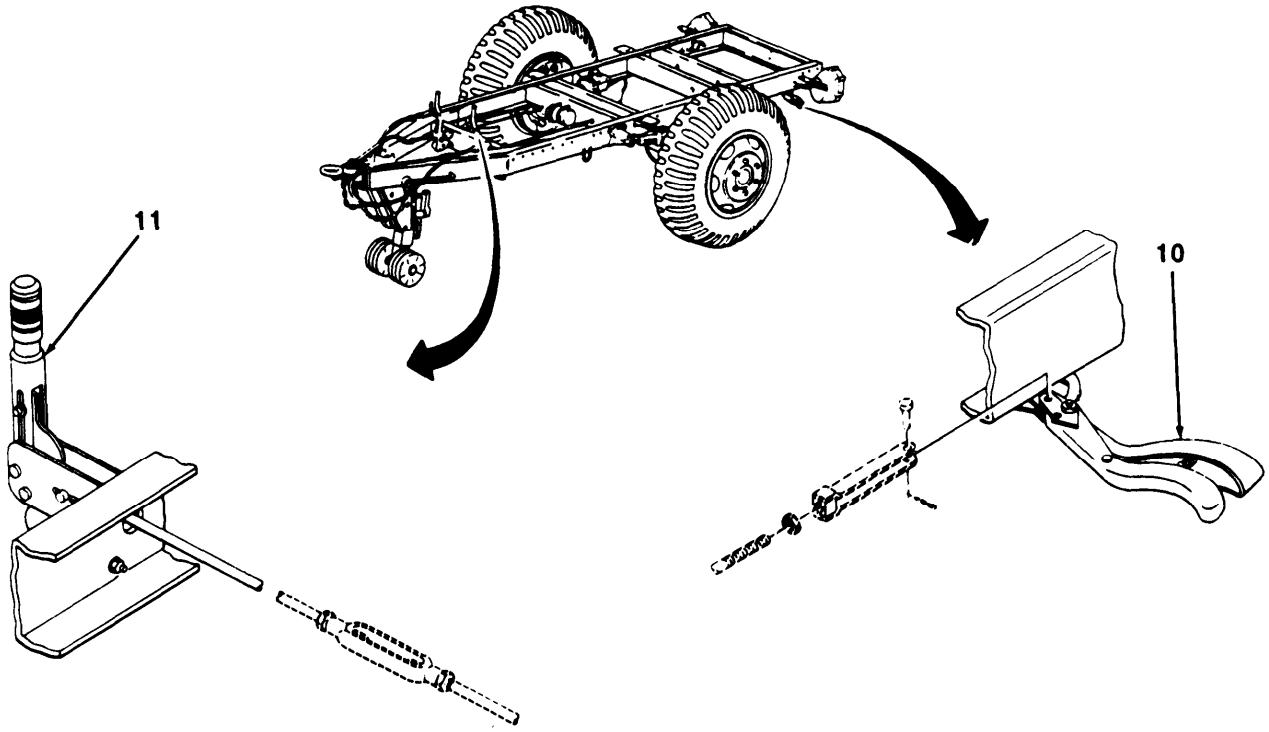

TA505235

Table 2-1. Operator/Crew Preventive Maintenance Checks and Services (PMCS) (Con't).

B - Before D - During A - After

ITEM NO.	INTERVAL B	INTERVAL D	INTERVAL A	ITEM TO BE INSPECTED PROCEDURE: Check for and have repaired, filled or adjusted as needed.	Equipment Is Not Ready/Available If:
				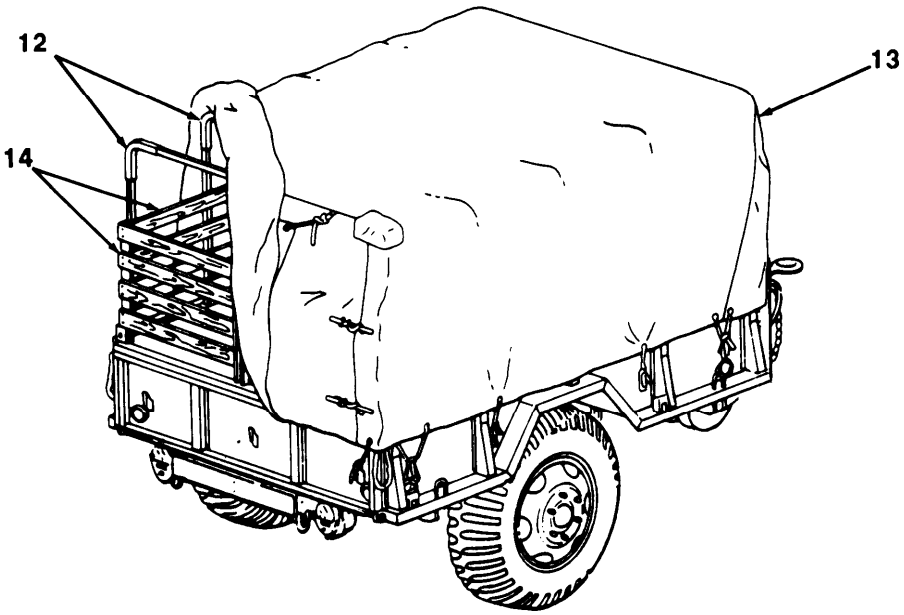	
8				**M107 SERIES WATER TANK TRAILER**	
	•			a. Check that inside of tank (16) is free of dirt and debris.	hide of tank is dirty.
	•			b. Check manhole cover latch (15) for proper operation.	
				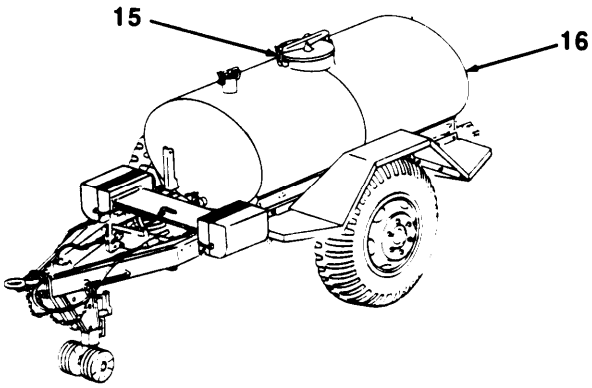	

TA505236

Table 2-1. Operator/Crew Preventive Maintenance Checks and Services (PMCS) (Con't).

B - Before D - During A - After

ITEM NO.	INTERVAL B	INTERVAL D	INTERVAL A	ITEM TO BE INSPECTED PROCEDURE: Check for and have repaired, filled or adjusted as needed.	Equipment is Not Ready/Available If:
	•	•		c. Check that faucets (18), manifold valve (20), and discharge valve (17) operate properly.	
		•		d. Check tank (16), piping (19), faucets (18), manifold valve (20), and discharge valve (17) for ieaks.	
9				**M448 SHOP VAN TRAILER**	
	•			a. Check rear doors (24) and side doors (22) for proper operation.	Doors cannot be properly latched.
	•			b. Check side door latch bandies (21) for proper operation.	
	•			c. Check leveling jacks (23) for freedom of movement and general condition.	

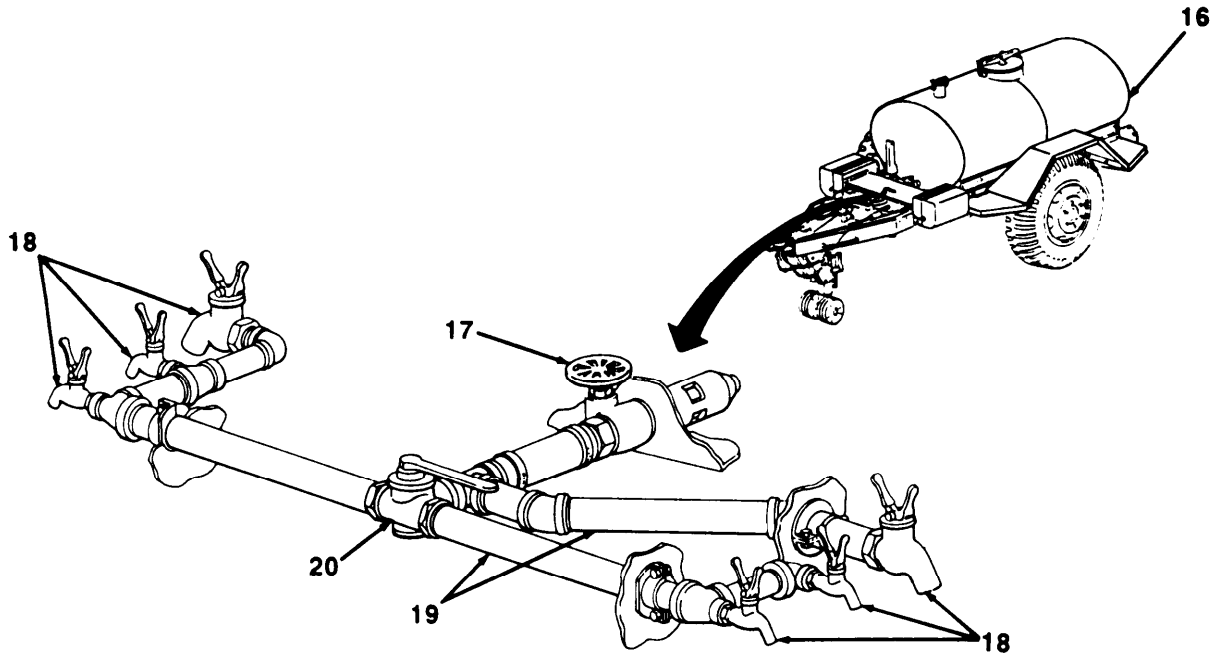

TA605237

Table 2-1. Operator/Crew Preventive Maintenance Checks and Services (PMCS) (Con't).

B-Before D - During A - After

ITEM NO.	INTERVAL B	INTERVAL D	INTERVAL A	ITEM TO BE INSPECTED PROCEDURE: Check for and have repaired, filled or adjusted as needed.	Equipment Is Not Ready/Available If:

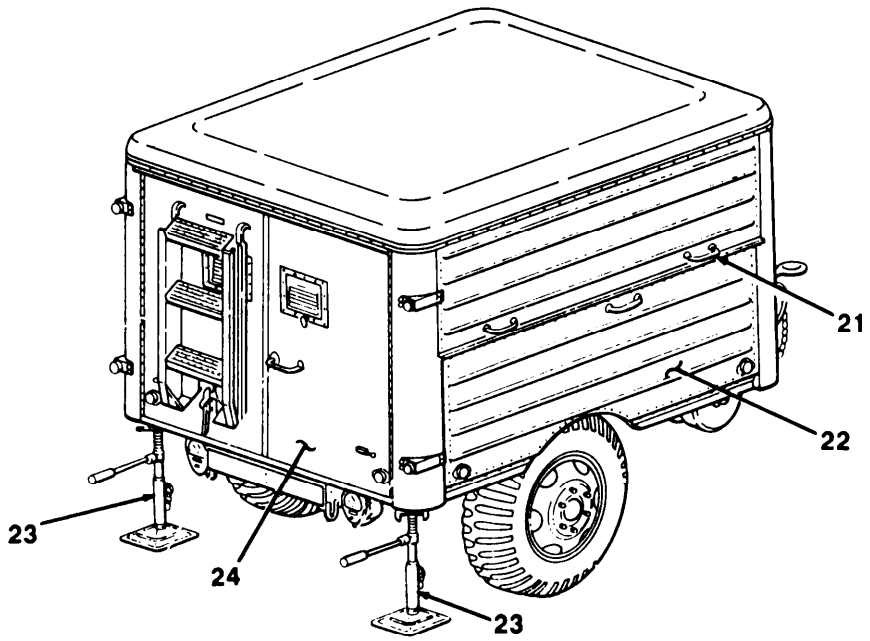

TA606238

Table 2-1. Operator/Crew Preventive Maintenance Checks and Services (PMCS) (Con't).

B - Before D - During A - After

ITEM NO.	INTERVAL B	INTERVAL D	INTERVAL A	ITEM TO BE INSPECTED PROCEDURE: Check for and have repaired, filled or adjusted as needed.	Equipment is Not Ready/Avallablo If:
	•			d. Check 110-volt receptacle (27) for proper mounting and general condition.	
	•	•		e. Check electrical outlets (25) for proper mounting, operation, and general condition.	
	•	•		f. Check circuit breakers (28), panel, and box (26) for proper mounting, operation, and general condition.	Circuit breakers do not operate properly.

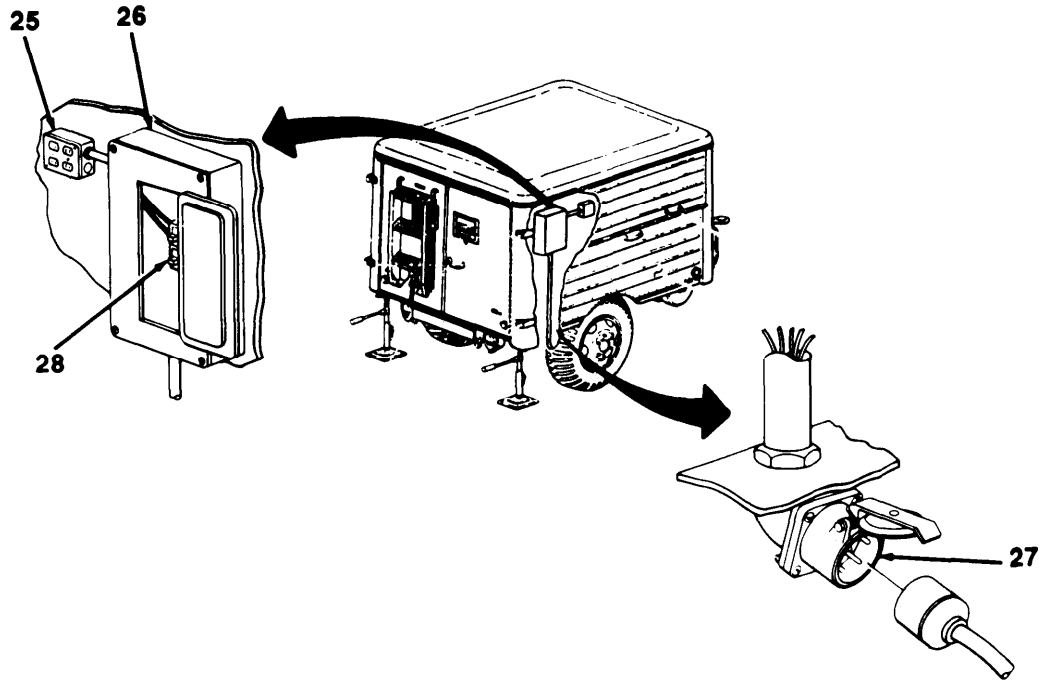

TA505239

Section III. OPERATION UNDER USUAL CONDITIONS

Paragraph Title	Page Number
Coupling Trailer to Towing Vehicle	2-15
General	2-15
Loading Cargo Trailer (M105 Series)	2-18
Operating 110-volt Electrical Power Source (M448)	2-19
Towing Instructions	2-17
Uncoupling Trailer from Towing Vehicle	2-17
Water TAnk Trailer (M107 Series)	2-18

2-9. GENERAL.

a. This section contains instructions for safely operating the trailers under usual conditions. Unusual operating conditions are defined and described in Section IV of this chapter.

b. Perform all Before (B) PMCS in Table 2-1 before operating the trailer.

c. Review all towing vehicle operating instructions to prepare for coupling and **uncoupling** operations.

2-10. COUPLING TRAILER TO TOWING VEHICLE.

WARNING

All personnel must stand clear of towing vehicle and trailer during coupling operation. Failure to follow this warning may result in serious injury or death to personnel.

2-10. COUPLING TRAILER TO TOWING VEHICLE (Con't).

CAUTION

Have assistant direct you during backing operations. Damage to equipment may result if caution is not followed.

a. Aline towing vehicle with trailer and slowly back towing vehicle until pintle (6) is adjacent to drawbar ring (7).

b. Remove pintle lockpin (5) and open pintle (6).

c. Release trailer handbrake(s) and, with assistance, move trailer as required to engage drawbar ring (7) in pintle (6).

d. Close pintle (6) and install pintle lockpin (5).

e. Cross safety chains (11) under drawbar ring (7) and attach to towing vehicle eyebolts (1O).

f. Connect intervehicular cable (1) to towing vehicle receptacle (4).

g. Connect service air hose (2) to towing vehicle gladhand (3). If coupling an M105A2C, also connect emergency air hose (9) to towing vehicle gladhand (8).

h. Turn on towing vehicle air valves to apply vacuum or pressure as required.

i. Pull out release handle (13) and at same time, begin raising adjustable caster assembly (12). Let go of release handle while raising adjustable caster assembly.

WARNING

If cargo trailer is equipped with an old-style, single-wheel adjustable caster assembly, use extreme caution to ensure that locking pin of handle has securely locked the adjustable caster assembly in the raised position. if locking pin is not fully locked, adjustable castor assembly may fall, resulting in serious injury.

j. Raise adjustable caster assembly (12) until release handle (13) locks adjustable caster assembly in position. Ensure that release handle is fully engaged.

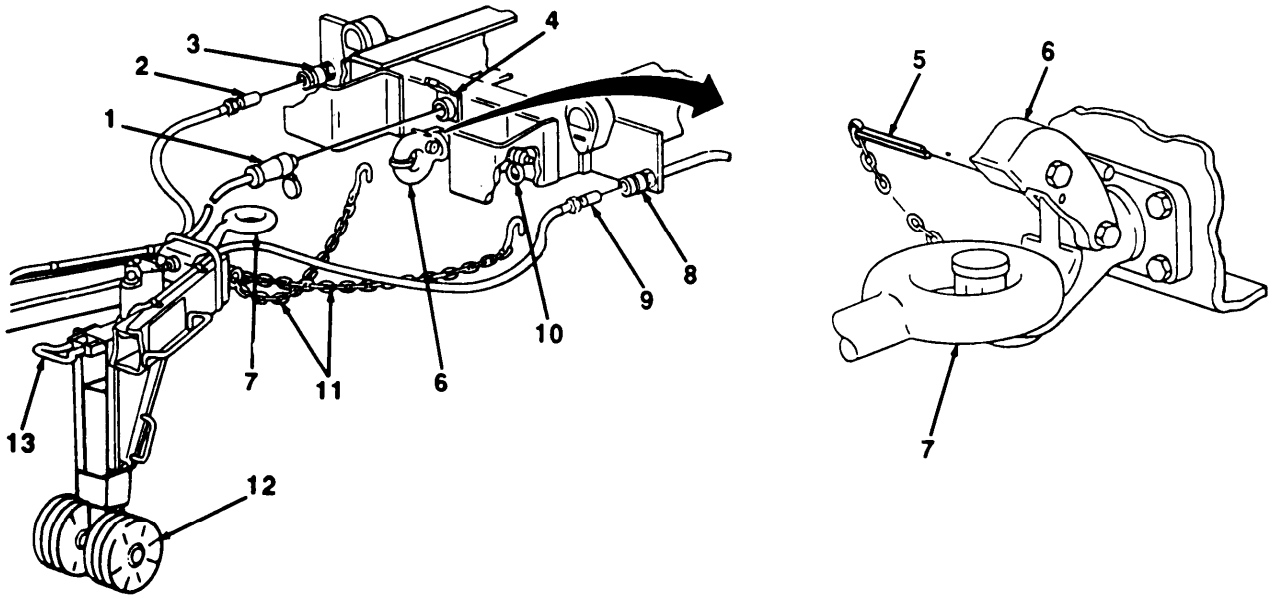

TA606240

2-11. TOWING INSTRUCTIONS.

WARNING

Before moving trailer, ensure that all loose equipment is properly stowed and that nothing will drag on ground. If trailer is loaded, ensure that load is properly secured. Failure to follow this warning may result in injury to personnel or damage to equipment.

a. Perform all During (D) PMCS in Table 2-1 while operating the trailer.

b. When towing the trailer, overall length of the unit must be kept in mind when passing other vehicles and when turning.

c. Turning and backing operations will be affected because the towing vehicle and trailer are a hinged unit.

d. Always tow the trailer at safe speeds and note any driving irregularities.

e. When parking for extended periods, set the handbrakes on both towing vehicle and trailer.

f. If the towing vehicle and trailer are parked on a hill, chock wheels.

g. Refer to FM 21-305 for further information on proper driving practices.

2-12. UNCOUPLING TRAILER FROM TOWING VEHICLE.

WARNING

- **All personnel must stand clear of towing vehicle and trailer during uncoupling operation. Failure to follow this warning may result in serious injury or death.**
- **If cargo trailer is equipped with an old-style, single-wheel castor assembly, use extreme caution to ensure that locking pin of handle has securely locked the adjustable caster assembly in the lowered position. If locking pin is not fully locked, adjustable caster assembly may collapse, resulting in serious injury.**

a. Support adjustable caster assembly (2) and at the same time pull out release handle (1). Lower adjustable caster assembly. Ensure that release handle is fully engaged.

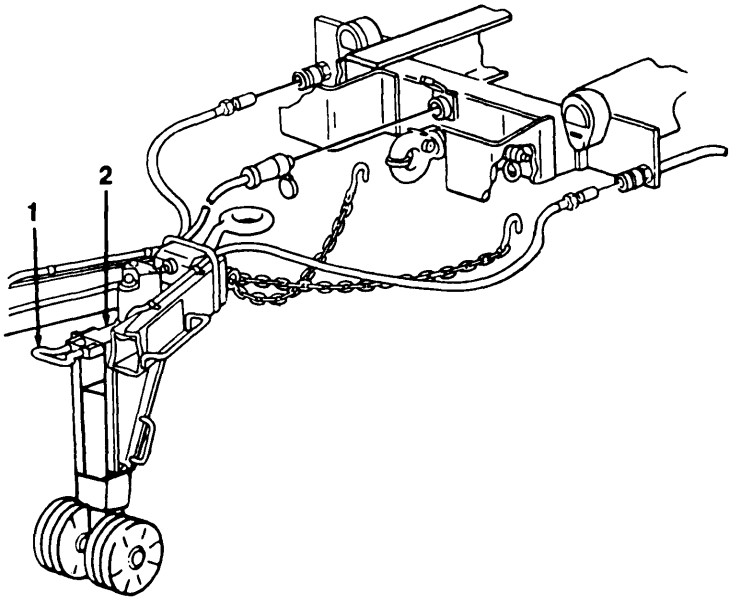

TA505241

2-12. UNCOUPLING TRAILER FROM TOWING VEHICLE (Con't).

b. Disconnect service air hose (4) from towing vehicle gladhand (5). If uncoupling an M105A2C, also disconnect emergency air hose (11) from towing vehicle gladhand (10).

c. Disconnect intervehicular cable (3) from towing vehicle receptacle (6) and stow on trailer,

d. Disconnect safety chains (13) from towing vehicle eyebolts (12) and stow on trailer,

e. Remove pintle Iockpin (7) and open pintle (8).

f. With assistance, move trailer as required to disengage drawbar ring (9) from pintle (8). Apply handbrake(s).

g. Move towing vehicle a safe distance from trailer.

h. Perform all After (A) PMCS in Table 2-1.

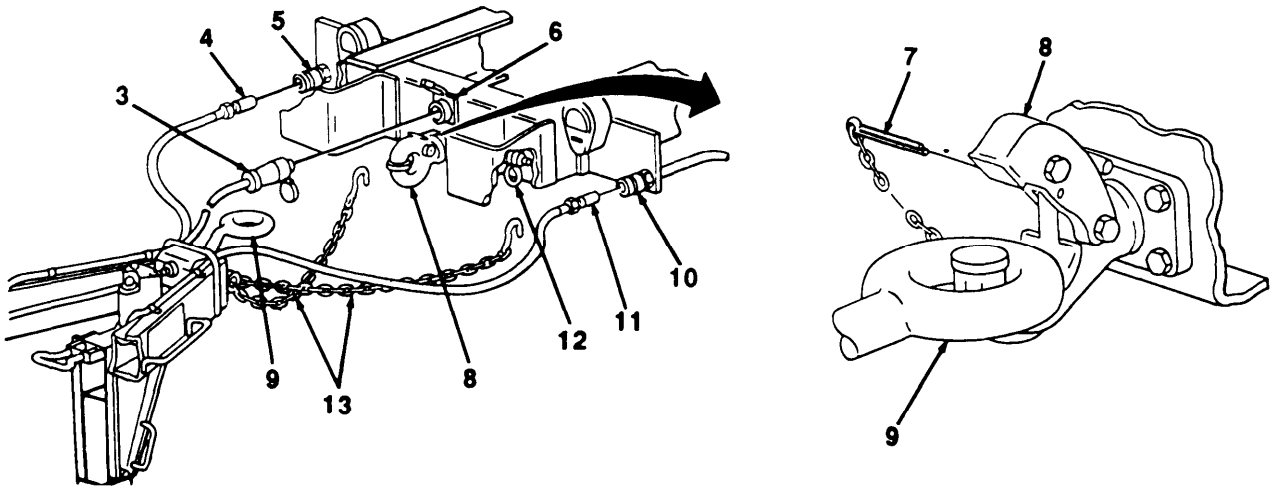

2-13. LOADING CARGO TRAILER (M105 SERIES).

a. Load capacity of the trailer is 3000 lb (1362 kg) on highway or cross-country. All loads must be evenly distributed over trailer floor. Do not exceed load capacity.

b. Trailer may be loaded with a forklift truck if rear stake rack is removed and tailgate is opened.

2-14. WATER TANK TRAILER (M107 SERIES).

a. Filling Tank.

WARNING

- **The highest sanitary practices must be exercised in handling water for drinking purposes. Serious illness may result from impure drinking water.**
- **M107 Series Water Tank Trailers, when used to haul NONPOTABLE WATER, must be so marked.**

(1) Position water tank trailer next to water supply on solid level ground.

TA505242

2-14. WATER TANK TRAILER (M107 SERIES) (Con't)

(2) Open manhole cover (2).

NOTE

All water tank trailers must be filled from an overhead, free-flowing source, or by a pressure pump.

(3) Fill tank (1) through manhole opening (3).

(4) Close manhole cover (2).

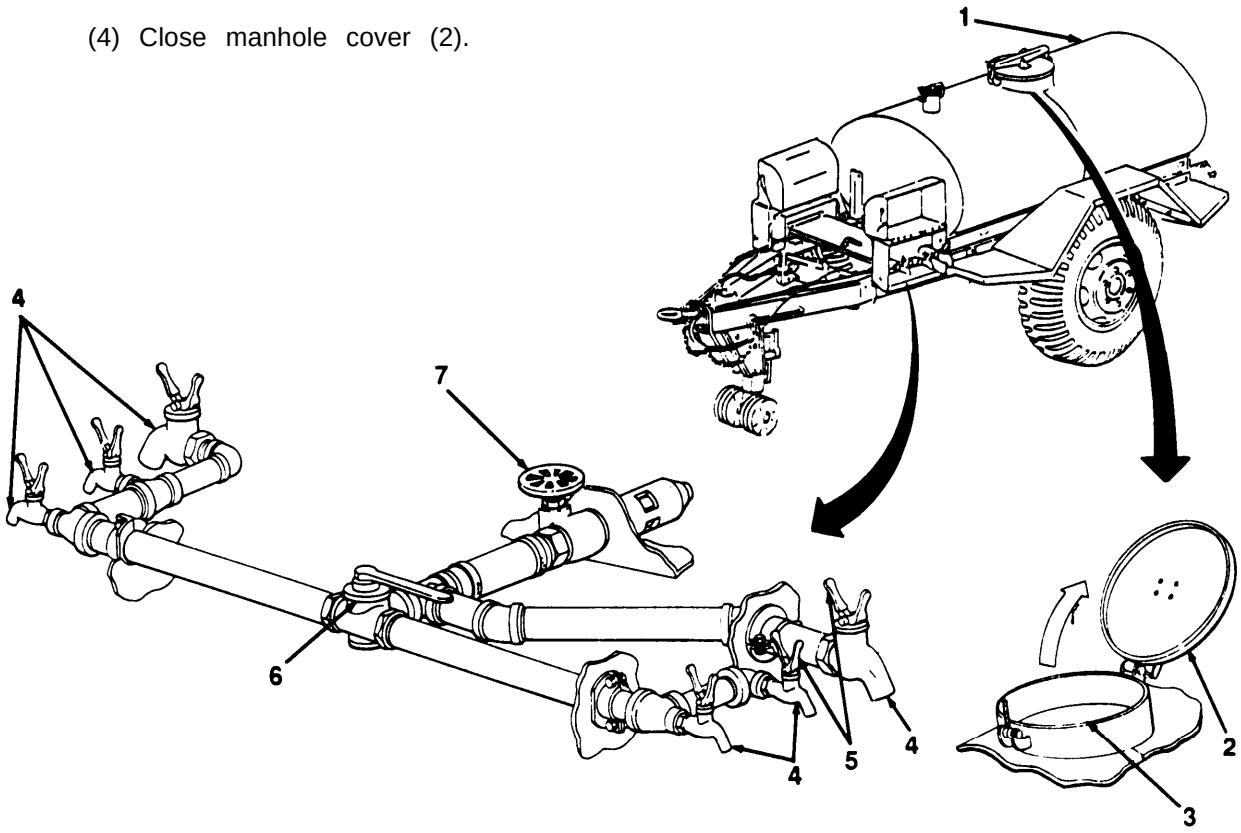

b. Drawing Water from Tank.

NOTE

During periods of inactivity, water should be drained from tank piping, discharge valve (7), manifold valve (6), and faucets (4).

(1) Open discharge valve (7), permitting water to flow from tank (1) to manifold valve (6).

(2) Open manifold valve (6), permitting water to flow to faucets (4).

(3) Squeeze handles (5) on top of faucets (4) as required to dispense water.

2-15. OPERATING 110-VOLT ELECTRICAL POWER SOURCE (M448).

a. Connecting.

(1) Park shop van trailer near auxiliary power source.

TA606243

2-15. OPERATING 110-VOLT ELECTRICAL POWER SOURCE (M448) (Con't).

(2) Remove two leveling jacks (6) from stowed position. Place one leveling jack under each rear corner of shop van trailer.

CAUTION

Leveling jacks (6) are used to provide support when personnel enter and exit trailer. They must not be used to raise rear of trailer. Failure to follow this caution will result in damage to leveling jacks.

(3) Remove lockpin (5) and extend leveling jack (6) until rear of trailer is supported. Insert lockpin to hold leveling jack in extended position. Repeat for other leveling jack.

(4) Remove ground rod (7) from stowed position and drive into ground.

(5) Connect 110-volt auxiliary power cable (4) to receptacle (3).

(6) Turn electrical power on at circuit breaker (2).

(7) Plug electrical equipment into outlets (1) as needed for use.

b. Disconnecting.

(1) Turn off all electrical equipment and unplug from outlets (1).

(2) Turn off electrical power at circuit breaker (2).

(3) Disconnect 110-volt auxiliary power cable (4) from receptacle (3).

(4) Remove ground rod (7) from ground and stow.

(5) Remove lockpin (5) and lower leveling jack (6). Insert lockpin and stow leveling jack in shop van trailer. Repeat for other leveling jack.

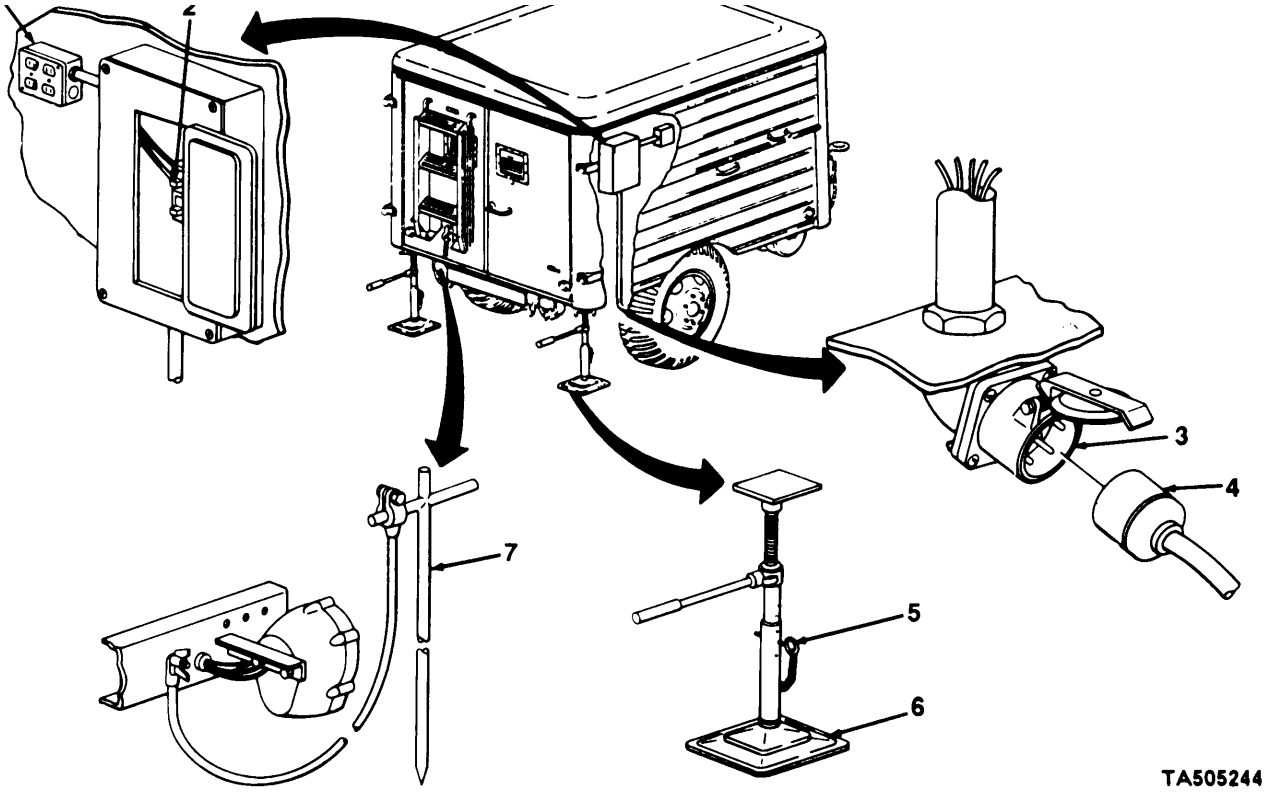

Section IV. OPERATION UNDER UNUSUAL CONDITIONS

Paragraph Title	Page Number
Fording	2-22
General	2-21
Operation in Extreme Cold	2-21
Operation in Extreme Heat	2-21
Operation in Mud	2-22
Operation in Saltwater Areas	2-22
Operation in Sandy or Dusty Areas	2-22
Operation in Snow	2-22

2-16. GENERAL.

This section contains instructions for safely operating the trailers under unusual conditions. In addition to normal preventive maintenance service, special care must be taken to keep the trailers operational in extreme temperatures and humidity.

2-17. OPERATION IN EXTREME COLD.

a. Special care must be taken when operating the trailers in cold weather. Refer to FM 9-207 for information regarding the water tank trailer. Refer to FM 21-305 for special instructions for all trailers.

b. Refer to Chapter 3, Section I for proper lubrication during extreme cold weather.

c. Care must be taken when handling cables. Extreme cold weather can cause insulation material on electrical wire to crack, causing short circuits. Construction material may become hard, brittle, and easily damaged or broken.

d. When parking for any period of time in temperature below 0°F (-18°C), parkin a sheltered area out of the wind and clean off any buildup of ice or snow. Place a footing of planks or brush under tires and adjustable caster assembly to prevent them from freezing to the ground. Ensure that the tires are properly inflated (para 1-10). Underinflated tires will freeze, resulting in flat spots.

e. The following steps should be followed for the M107 Series Water Tank Trailers:

(1) Water trailers equipped with an aluminum water tank body may use the M67 Immersion Heater to prevent contents from freezing. Refer to TM5-4540-202-12&P for Installation, operation, and maintenance of the M67 Immersion Heater.

(2) Drain water from piping, valves, and faucets during periods of inactivity by closing discharge valve and opening manifold valve and all faucets (para 2-14).

(3) In areas where temperatures will drop below 32°F (0°C), manhole cover should be tightly closed.

2-18. OPERATION IN EXTREME HEAT.

a. Refer to Chapter 3, Section I for proper lubrication during extreme heat conditions.

b. Do not park the trailer in sunlight for long periods of time. Heat and sunlight shorten tire life.

c. Shelter or cover the trailer with canvas, if available.

2-19. OPERATION IN SANDY OR DUSTY AREAS.

a. Clean, inspect, and lubricate the trailer more often in sandy or dusty areas (Chapter 3, Section 1),

b. Maintain proper tire pressure:

(1) Reduce tire pressure to 25 psi (172 kPa) for operation on soft sand,

(2) Reduce tire pressure to 35 psi (241 kPa) for operation on cross-country terrain. Tire pressure must be returned to 50 psi (345 kPa) when operation resumes on hard-surface roads if tactical situation permits.

c. Take precautions to prevent water for drinking purposes from becoming contaminated with sand and dust.

2-20. OPERATION IN SALTWATER AREAS.

Clean, inspect, and lubricate the trailer more often when operating in saltwater areas (Chapter 3, Section 1).

2-21. OPERATION IN MUD.

a. Immediately after operation in mud, thoroughly clean, inspect, and lubricate if tactical situation permits (Chapter 3, Section 1).

b. Pack wheel bearings as required (Chapter 3, Section I).

2-22. OPERATION IN SNOW.

a. Refer to FM 21-305 for special instructions on driving hazards in snow.

b. Reduce tire pressure to 25 psi (172 kPa).

2-23. FORDING.

a. Refer to the towing vehicle operating instructions for information on fording. Towing vehicle instructions are also applicable to the trailer,

b. Refer to TM 9-238 for fording instructions.

CHAPTER 3
OPERATOR MAINTENANCE

Section I. LUBRICATION INSTRUCTIONS

Paragraph Title	Page Number
General	3-1
Lubrication Chart	3-2
Specific Lubrication Instructions	3-1

3-1. GENERAL.

NOTE

These instructions are MANDATORY.

a. The trailers must receive lubrication with approved lubricants at recommended intervals in order to be mission-ready at all times.

b. The KEY lists lubricants to be used in all temperature ranges and shows the intervals.

c. The lubrication chart shows lubrication points, names items to be lubricated, the required lubricant, and recommended intervals for lubrication. Any special lubricating instructions required for specific components are contained in the NOTES section of the chart.

d. Recommended intervals are based on normal conditions of operation, temperature, and humidity. When operating under extreme conditions, lubricants should always be changed more frequently. When in doubt, notify your supervisor.

3-2. SPECIFIC LUBRICATION INSTRUCTIONS.

a. Keep all lubricants in a closed container and store in a clean, dry place away from extreme heat. Keep container covers clean and do not allow dust, dirt, or other foreign material to mix with lubricants. Keep all lubrication equipment clean and ready for use.

b. Maintain a record of lubrication performed and report any problems noted during lubrication. Refer to DA Pam 738-750 for maintenance forms and procedures to record and report any findings.

WARNING

Wipe excess lubricant from the area of brakeshoe linings to avoid grease soaking the linings. If brakeshoe linings become soaked, have unit maintenance replace them. Failure to follow this warning may cause brakes to malfunction, resulting in serious injury or death.

c. Keep all external parts of equipment not requiring lubrication free of lubricants. After lubrication, wipe off excess oil or grease to prevent accumulation of foreign matter.

d. Refer to FM 9-207 for lubrication instructions in cold weather.

e. Refer to TM 9-238 for lubrication instructions before and after fording operations.

f. After operation in mud, sandy, or dusty conditions, clean and inspect all points of lubrication for fouled lubricants. Change lubricants as required.

LUBRICATION CHART

CHASSIS TRAILER: 1-1/2-TON, 2-WHEEL, M103 SERIES

TRAILER, CARGO: 1-1/2-TON, 2-WHEEL, M105 SERIES

TRAILER, TANK, WATER: 1-1/2-TON, 2-WHEEL, 400-GALLON, M107 SERIES

TRAILER, VAN, SHOP: FOLDING SIDES, 1-1/2-TON, 2-WHEEL, M448

Intervals (on-condition and hard time) and related man-hour times are based on normal operation. The man-hour time specified is the time you need to do all services prescribed for a particular interval. Decrease the intervals if your lubricants are contaminated, or if you are operating equipment under adverse conditions, including longer-than-usual operating hours. The intervals may be extended during periods of low activity. If extended, adequate preservation precautions must be taken.

Dotted leader lines indicate lubrication is required on both sides of the equipment.

WARNING

Dry cleaning solvent P-D-680 is toxic and flammable, Always wear protective goggles and gloves, and use only in a well-ventilated area. Avoid contact with skin, eyes, and clothes, and DO NOT breathe vapors. DO NOT use near open flame or excessive heat. The solvent's flash point is 100°F-130°F (38°C-59°C). if you become dizzy while using cleaning solvent, immediately get fresh air and medical help. if solvent contacts eyes, immediately wash your eyes and get medical aid.

Clean all fittings and area around lubrication points with dry cleaning solvent (Item 6, Appendix E) or equivalent before lubricating equipment. After lubrication, wipe off excess oil or grease to prevent accumulation of foreign matter.

The lowest level of maintenance authorized to lubricate a point is indicated in parentheses by one of the following: (C) for Operator/Crew; or (O) for Unit Maintenance.

M103A1, M103A3, M105A1, M107A2, AND M107A2C

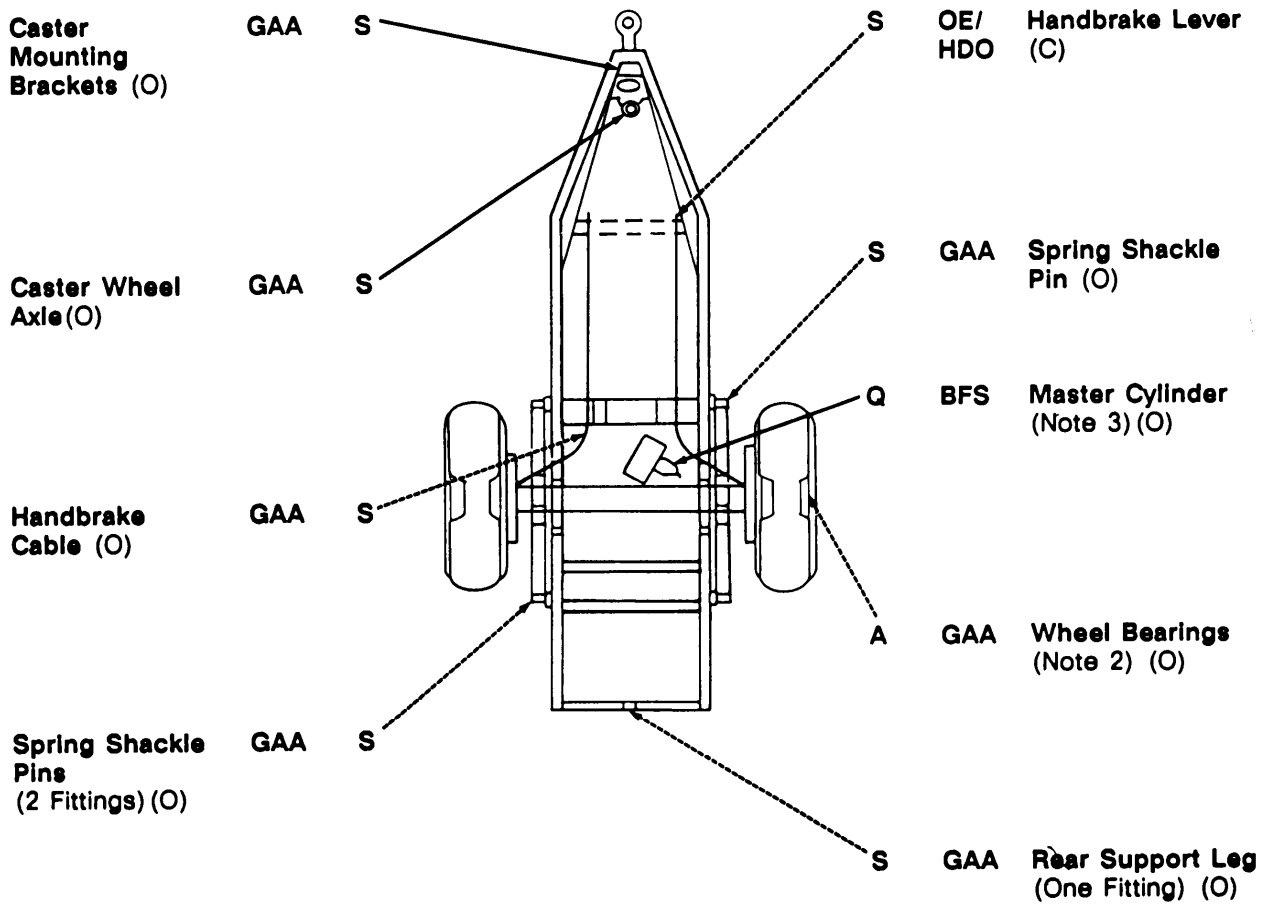

TOTAL MAN-HOUR*

INTERVAL	MAN-HOUR
Q	0.2
S	0.5
A	1.5

* The man-hours time specified is the time you need to do all services prescribed for a particular interval.

TA505245

M107A1

LUBRICANT	INTERVAL		INTERVAL	LUBRICANT	
Caster Mounting Brackets (O)	GAA	S	S	GAA	Spring Shackle Pin (O)
Caster Wheel Axle (O)	GAA	S	Q	BFS	Master Cylinder (Note 3) (O)
Handbrake Cable (O)	GAA	S	A	GAA	Wheel Bearings (Note 2) (O)
Spring Shackle Pins (2 Fittings) (O)	GAA	S	S	OE/ HDO	Handbrake Lever (C)

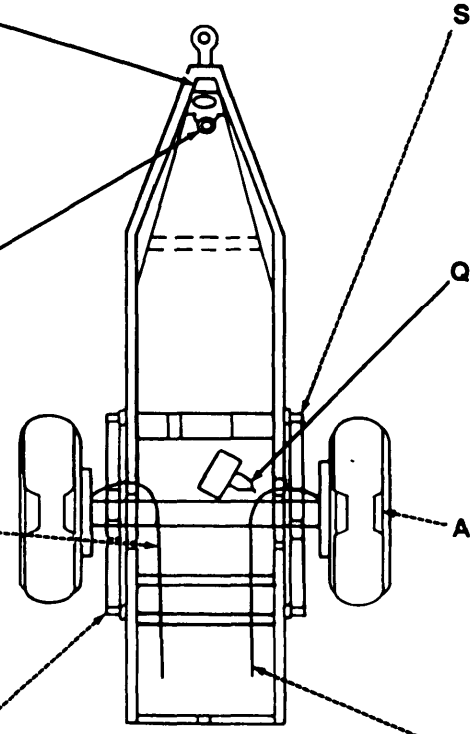

TOTAL MAN-HOUR*

INTERVAL	MAN-HOUR
Q	0.2
S	0.5
A	1.5

* The man-hours time specified is the time you need to do all services prescribed for a particular interval.

TA505246

M105A2C

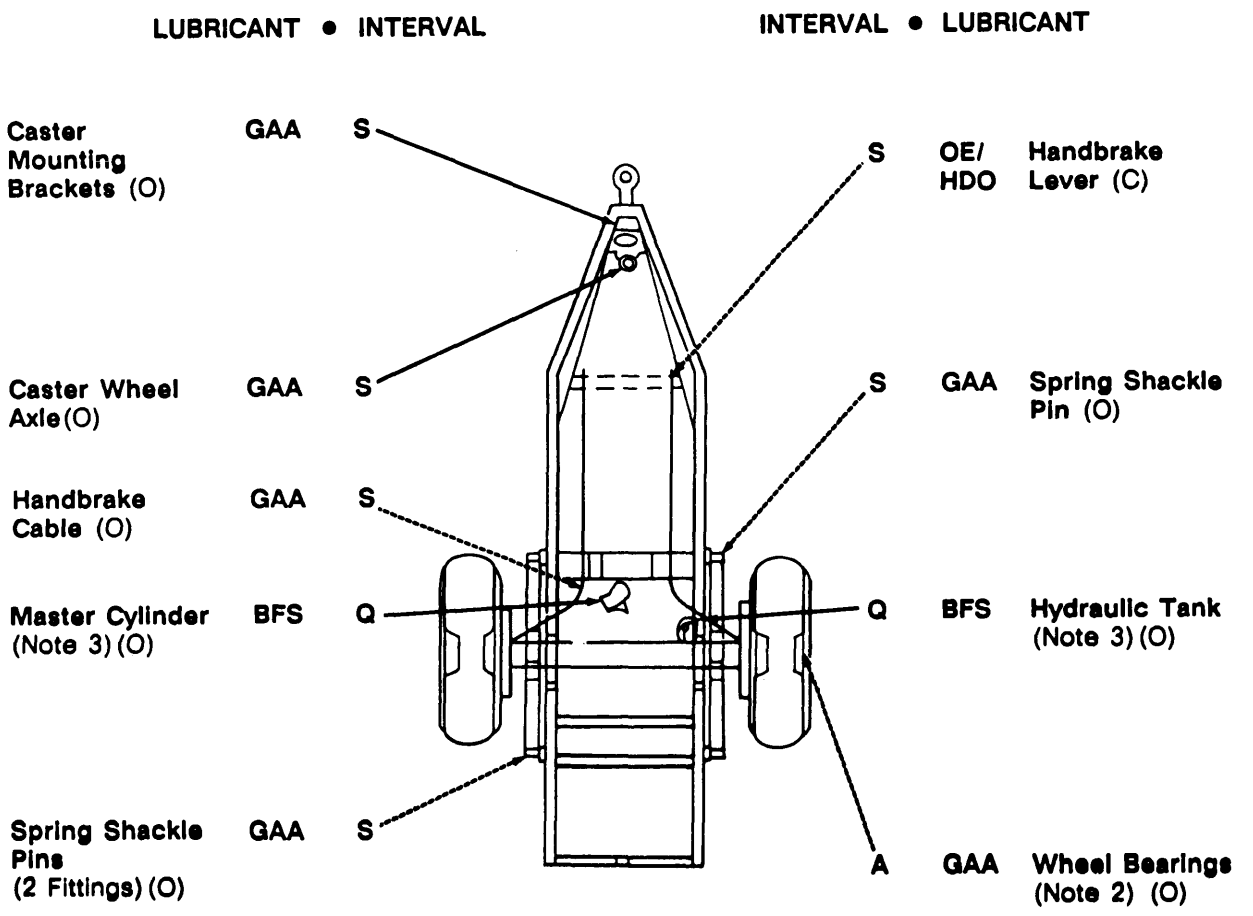

TOTAL MAN-HOUR*

INTERVAL	MAN-HOUR
Q	0.2
S	0.5
A	1.5

* The man-hours time specified is the time you need to do all services prescribed for a particular interval.

TA505247

— KEY —

LUBRICANTS	EXPECTED TEMPERATURES				INTERVALS
	ABOVE +15°F (ABOVE -9°C)	+40°F to -15°F (+4°C to -26°C)	+40°F to -65°F (+4°C to -54°C)	FOR ARCTIC OPERATION, REFER TO FM 9-207.	
OE/HDO (MIL-L-2104) Lubricating Oil, Internal Combustion Engine, Tactical Service	OE/HDO-30	OE/HDO-10	OEA		Q - Quarterly S - Semiannual A - Annual
OEA (MIL-L-46167) Lubricating Oil, Internal Combustion, Arctic			OEA		
BFS (MIL-L-46176) Brake Fluid Silicone, Automotive	All Temperatures				
GAA (MIL-G-10924) Grease, Automotive and Artillery	All Temperatures				

NOTES:

1. **OIL CAN POINTS.**
   - Every six months, lubricate linkage pins, clevises, and all exposed adjusting threads with OE/HDO.
   - If cargo trailer is equipped with old-style, single-wheel adjustable caster assembly, quarterly, or as required, clean all debris and dirt from locking pin area and lubricate with OE/HDO.

2. **WHEEL BEARINGS.** Every 12 months, remove, clean, and pack with GAA. Refer to TM 9-214, *Inspection, Care, and Maintenance of Antifriction Bearings*.

3. **MASTER CYLINDER AND HYDRAULIC TANK.** Every three months, check fluid level. Add fluid to within ½ in. (13 mm) from top.

Section II. TROUBLESHOOTING PROCEDURES

Paragraph Title	Page Number
Explanation of Columns	3-7
General	3-7
Operator/CrewTroubleshooting,Table3-1	3-8
Troubleshooting Symptom Index	3-8

3-3. GENERAL.

a. This section provides information for identifying and correcting malfunctions which may develop while operating your trailer.

b. The Troubleshooting Symptom Index in paragraph 3-5 lists common malfunctions which may occur, and refers you to the proper page in Table 3-1 for a troubleshooting procedure.

c. If you are unsure of the location of an item mentioned in troubleshooting, refer to paragraph l-7 or to the maintenance task where the item is replaced.

d. Before performing troubleshooting, read and follow all safety instructions found in the Warning Summary at the front of this manual.

e. This section cannot list all malfunctions that may occur, nor all tests or inspections and corrective actions. If a malfunction is not listed, or is not corrected by the listed corrective actions, notify your supervisor.

f, When troubleshooting a malfunction:

(1) Locate the symptom or symptoms in the Troubleshooting Symptom Index in paragraph 3-5 that best describe the malfunction.

(2) Turn to the page in Table 3-1 where the troubleshooting procedures for the malfunction in question are described. Headings at top of each page show how each troubleshooting procedure is organized: MALFUNCTION, TEST OR inspection (in step number order), and CORRECTIVE ACTION.

(3) Perform each step in the order listed until the malfunction is corrected. DO NOT perform any maintenance task unless the troubleshooting procedure tells you to do so.

3-4. EXPLANATION OF COLUMNS.

The columns in Table 3-1 are defined as follows:

(1) **MALFUNCTION.** A visual or operational indication that something is wrong with the trailer.

(2) **TEST OR inspection.** A procedure to isolate the problem in a component or system.

(3) **CORRECTIVE ACTION. A** procedure to correct the problem.

3-5. TROUBLESHOOTING SYMPTOM INDEX.

Troubleshooting Procedure Page

BRAKES

Brakes Do Not Engage 3-9
Brakes Do Not Release ..., ... 3-9

ELECTRICAL SYSTEM

All Lamps Fail to night 3-8
One or More Lamps (But Not All) Fail to Light 3-8

110-VOLT ELECTRICAL SYSTEM (M448)

Circuit Breaker Trips 3-9
No Power. 3-9

Table 3-1. Operator/CrewTroubleshooting.

MALFUNCTION TEST OR INSPECTION	CORRECTIVE ACTION
ELECTRICAL SYSTEM	
1. ALL LAMPS FAIL TO LIGHT,	
step 10 Check that towing vehicle lights are turned on.	Refer to towing vehicle technical manual for Instructions.
Step 2. Check intervehicular cable for proper connection,	Connect Intervehicular cable (para 2-10).
Step 3. Check towing vehicle circuit breaker/fuse.	Refer to towing vehicle technical manual for Instructions.
2. ONE OR MORE LAMPS (BUT NOT ALL) FAIL TO LIGHT.	
Check for loose plug connectors at affected light assemblies.	Connect loose plug connector.

Table 3-1. Operator/Crew Troubleshooting (Con't).

MALFUNCTION
TEST OR INSPECTION
CORRECTIVE ACTION

11O-VOLT ELECTRICAL SYSTEM (M448)

3. NO POWER.

Step 1. Check auxiliary power cable for loose connection.

Connect auxiliary power cable (para 2-15).

Step 2. Check if circuit breakers in 110-volt control box are tripped (para 2-15).

Reset circuit breakers (para 2-15).

4. CIRCUIT BREAKER TRIPS.

Check for power overload.

Unplug excess power equipment. Reset circuit breaker (para 2-15).

BRAKES

5. BRAKES DO NOT ENGAGE.

Step 1. Check for closed air valve on towing vehicle.

Open air valve. Refer to towing vehicle technical manual for instructions.

Step 2. Check for brake fluid leaks.

Open air valves. If brake fluid is leaking, notify unit maintenance.

6. BRAKES DO NOT RELEASE.

NOTE

All models have two air hoses except for M103A1 and M105A1. These models have one air hose.

Step 1. Check for loose air hose(s).

Connect air hose(s) (para 2-10).

Step 2_0 Ensure that air valves on towing vehicle are open.

Open air valves. Refer to towing vehicle technical manual for instructions.

Section III. OPERATOR MAINTENANCE

Paragraph Title	Page Number
Handbrake Lever Adjustment (All Except M107A1)	3-10
Operational Air Leak Check	3-10
Wheel Replacement	3-11

3-6. HANDBRAKE LEVER ADJUSTMENT (ALL EXCEPT M107A1).

WARNING

If trailer is not coupled to towing vehicle, ensure that wheols are securelychocked. Failure to do so may cause trailer to roll, resulting in injury to porsonnel or damage to equipment.

NOTE

- **Handbrake lever (1) is property adjusted when additional force is required to move handbrake lever beyond two-thirds distance of travel toward the applied position.**
- **Both handbrake levers (1) preadjusted the same way. This procedure covers one handbrake lever,**

a. Release handbrake lever (1).

b. Turn adjustment knob (2) clockwise to tighten or counterclockwise to loosen.

c. Check adjustment, Repeat steps a and b as required.

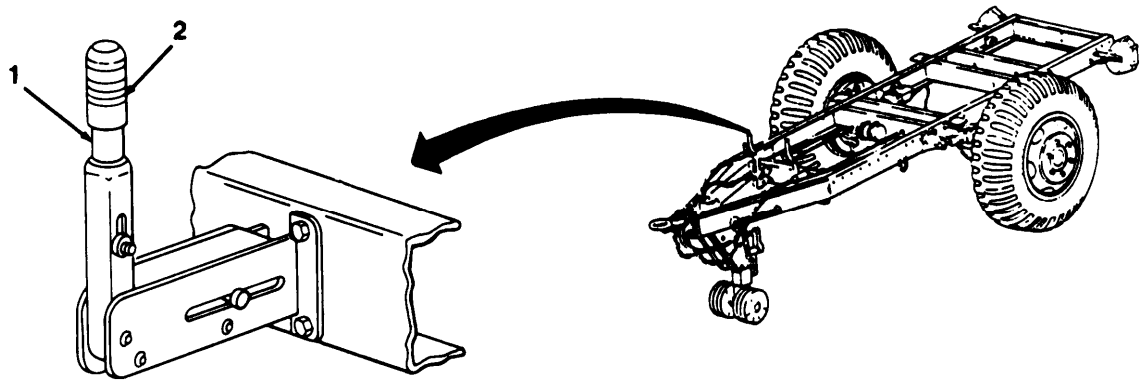

3-7. OPERATIONAL AIR LEAK CHECK.

a. Couple trailer to towing vehicie and connect all air hoses (para 2-10).

b. Start towing vehicle and watch vacuum gage (1) or air pressure gage (2) for normal reading. Refer to towing vehicle technical manual for instructions.

TASOS248

3-7. OPERATIONAL AIR LEAK CHECK (Con't).

c, Push brake pedal down to applied position and hold.

d. Shut down engine.

e. Watch vacuum gage (1) or air pressure gage (2) for two minutes. If pressure or vacuum drops more than 10% within two minutes, notify unit maintenance.

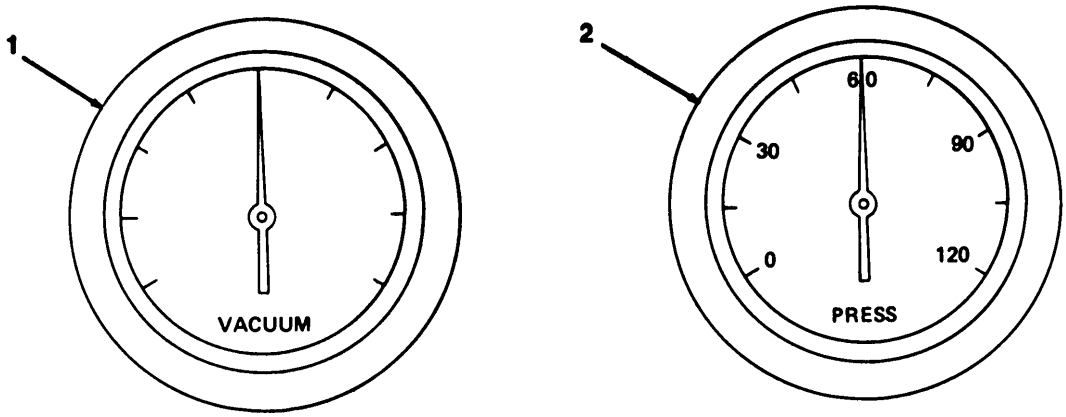

3-8. WHEEL REPLACEMENT.

a. **Removal.**

(1) Apply handbrake(s).

NOTE

Hub studs and wheel nuts are marked Ron right wheel and L on left wheel. Nuts must be turned in opposite direction of normal forward rotation of wheel to be loosened or removed.

(2) Loosen, but do not remove, six nuts (4) from wheel (1).

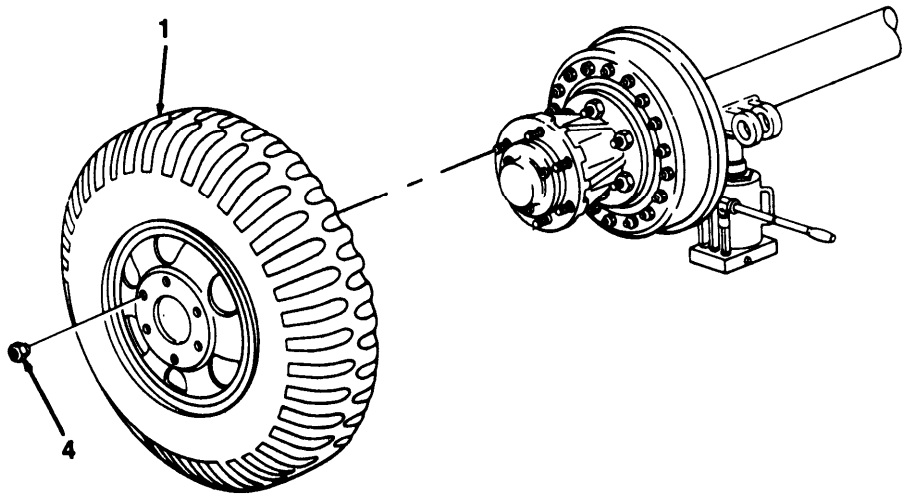

TA506249

3-8. WHEEL REPLACEMENT (Con't).

(3) Position floor jack under axle (3) near wheel (1) to be removed, and raise trailer until wheel is off ground.

(4) Remove six nuts (4).

(5) Remove wheel (1) from wheel studs (2).

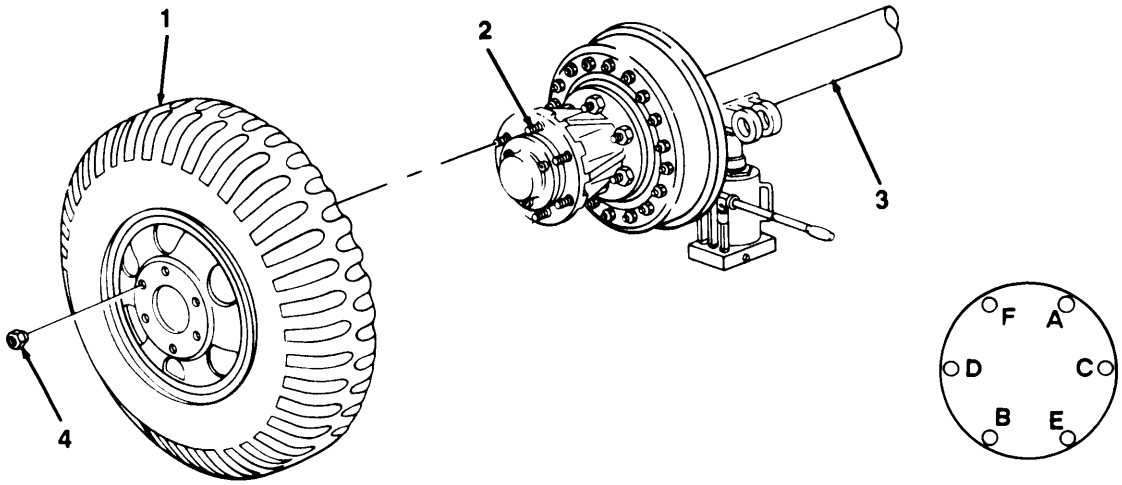

b. Installation.

(1) Position wheel (1) on wheel studs (2).

(2) Install six nuts (4) fingertight.

(3) Lower floor jack until wheel (1) is on ground. Remove floor jack.

(4) Tighten six nuts (4) using tightening sequence shown. Have unit maintenance tighten nuts to 340-370 lb. -ft. (461-502 N.m) as soon as possible.

TA506260 –

CHAPTER 4
UNIT MAINTENANCE

Section 1. REPAIR PARTS; SPECIAL TOOLS; TEST, MEASUREMENT, AND DIAGNOSTIC EQUIPMENT (TMDE); AND SUPPORT EQUIPMENT

Paragraph Title	Page Number
Common Tools and Equipment	4-1
Repair Parts	4-1
Special Tools; Test, Measurement, and Diagnostic Equipment (TMDE); and Support Equipment	4-1

4-1, COMMON TOOLS AND EQUIPMENT.

Refer to the *Modified Table of Organization and Equipment (MTOE)for* authorized common tools and equipment applicable to your unit.

4-2. SPECIAL TOOLS; TEST, MEASUREMENT, AND DIAGNOSTIC EQUIPMENT (TMDE); AND SUPPORT EQUIPMENT.

No special tools, TMDE, or support equipment are required to maintain the trailers.

4-3. REPAIR PARTS.

Repair parts are listed and illustrated in Appendix F of this manual.

Section II. SERVICE UPON RECEIPT

Paragraph Title	Page Number
General	4-2
Inspection Instructions	4-2
Servicing Instructions	4-2

4-4. GENERAL.

When anew, used, or reconditioned trailer is first received, determine whether it has been properly prepared for service and is condition to perform its mission . Follow the inspection instructions in paragraph 4-5 and servicing instructions in paragraph 4-6.

4-5. INSPECTION INSTRUCTIONS.

a. Refer to DD Form 1397 for procedures on unpacking the trailer.

b. Remove all straps, plywood, tape, seals, and wrappings.

WARNING

Drycleaning solvent P-D-680 is toxicand flammable, Always wear protective goggles and gloves, and use only in a well-ventilated area. Avoid contact with skin, eyes, and clothes, and DO NOT breathe vapors. DO NOT use near open flame or excessive heat. The solvent's flash point is 100ºF-130"F (38°C-59°C). If you become dizzy while using cleaning solvent, Immediately get fresh air and medical help. If solvent contacts eyes, immediately wash your eyes and get medical aid.

c. Remove rust preventive compound from coated extetior parts of the trailer using dry cleaning solvent (Item 6, Appendix E) and rags (Item 11, Appendix E).

d. Inspect the trailer for damage incurred during shipment. Check also to see if the equipment has been modified.

e. Check the equipment against the packing list to ensure that the shipment is complete. Report any discrepancies in accordance with instructions in DA Pam 738-750.

4-6. SERVICING INSTRUCTIONS.

a. Perform all operator/crew and unit PMCS. Schedule the next PMCS on DD Form 314.

b. Lubricate all lubrication points as described in Chapter 3, Section 1, regardless of interval.

c. Report any problems on DA Form 2407.

d. Perform a break-in road test of 25 mi (40 km) at a maximum speed of 50 mi/h (80 km/h).

Section III. UNIT PREVENTIVE MAINTENANCE CHECKS AND SERVICES (PMCS)

Paragraph Title	Page Number
General	4-3
General PMCS Procedures	4-3
Unit Preventive Maintenance Checks and Services (PMCS), Table 4-1	4-4
Reporting Repairs	4-3
Service intervals	4-3
Specific PMCS Procedures	4-4

4-7. GENERAL.

To ensure that the M105 and M107 Series Trailers and M448 Shop Van are ready for operation stall times, they must reinspected one regular basis so that defects may be found before they result in serious damage, equipment failure, or injury to personnel. This section contains systematic instructions on inspections, adjustments, and corrections to be performed by unit maintenance.

4-8. SERVICE INTERVALS.

Perform PMCS, found in Table 4-1, at the following intervals:

(1) Perform *Quarterly* (Q) PMCS once every three months.

(2) Perform *Semiannual* (S) PMCS once every six months.

(3) Perform *Annual* (A) PMCS once each year.

4-9. REPORTING REPAIRS.

Report all defects and corrective actions on DA Form 2404. If a serious problem is found, report it to your supervisor immediately.

4-10. GENERAL PMCS PROCEDURES.

WARNING

Dry cleaning solvent P-D-680 is toxic and flammable. Always wear protective goggles and gloves, and use only in a well-ventilated area. Avoid contact with skin, eyes, and clothes, and DO NOT breathe vapors. DO NOT use near open flame or excessive heat. The solvent's flash point is 100°F-130°F(38°C-59°C). If you become dizzy while using cleaning solvent, immediately get fresh air and medical help. If solvent contacts eyes, immediately wash your eyes and get medical aid.

a. Keep equipment clean. Dirt, oil, and debris may cover up a serious problem. Clean as you work and as needed. Use dry cleaning solvent (Item 6, Appendix E) on all metal surfaces. Use soap (Item 5, Appendix E) and water on rubber, plastic, and painted surfaces.

b. While performing PMCS, inspect the following components:

(1) **Bolts, Nuts, and Screws.** Ensure that they are not loose, missing, bent, or broken. Tighten any that are loose.

(2) **Welds.** Inspect for gaps where parts are welded together. Report bad welds to your supervisor.

4-10. GENERAL PMCS PROCEDURES (Con't).

(3) Electric Wires or Connectors. Inspect for cracked or broken insulation, bare wires, and loose or broken connectors. Make repairs or replace as required.

(4) Hoses, Lines, and Fittings. Inspect for wear, damage, and leaks. Ensure that clamps and fittings are tight. If a leak originates from a loose fitting or connector, tighten it. If a component is broken or worn, correct problem if authorized by the Maintenance Allocation Chart (MAC) (Appendix B). If not authorized, report it to your supervisor.

4-11. SPECIFIC PMCS PROCEDURES.

a. Unit PMCS are provided in Table 4-1. Always perform PMCS in the order listed. Once it becomes a habit, anything that is not right can be spotted in a minute. If anything wrong is discovered through PMCS, perform the appropriate troubleshooting task in Section IV of this chapter. If any component or system is not serviceable, or if given service does not correct problem, notify your superisor.

b. Before performing preventive maintenance, read all the checks required for the applicable interval and prepare tools needed to make all checks. Have several clean rags (Item 11, Appendix E) handy. Perform ALL inspections at the applicable interval.

c. The columns in Table 4-1 are defined as follows:

(1) Item No. Provides a logical sequence for PMCS to be performed and is used as a source of item numbers for the "TM ITEM NO" column on DA Form 2404 in recording PMCS results.

(2) Interval. Specifies interval at which PMCS is to be performed.

(3) Item to be Inspected. Lists the system and common name of items that are to be inspected. Included in this column are specific servicing, inspection, replacement, or adjustment procedures to be followed.

(4) Procedures. Tells you how to do the required check or service.

Table 4-1. Unit Preventive Maintenance Checks and Services (PMCS).

Q - Quarterly S - Semiannual A - Annual

ITEM NO.	INTERVAL			ITEM TO BE INSPECTED	PROCEDURES
	Q	S	A		
					NOTE **Perform operator/crew PMCS prior to or along with unit PMCS.**
1				**FRAME**	
			●		Inspect for cracks, bent members, and broken welds.
2				**MASTER CYLINDER AND HYDRAULIC TANK**	
	●				Check fluid level. Fill to within ½ in. (13 mm) from top (CHAPTER 3, Section I).
3				**WHEEL BEARINGS**	
			●		Remove hubs and wheel bearings. Clean, inspect, and pack wheel bearings (para 4-48 or 4-49).

Table 4-1. Unit Preventive Maintenance Checks and Services (PMCS) (Con't).

Q - Quarterly S - Semiannual A - Annual

ITEM NO.	INTERVAL			ITEM TO BE INSPECTED	PROCEDURES
	Q	S	A		
4				BRAKE ASSEMBLIES	
		●			a. Clean, inspect, and repair or replace internal brake parts as required (para 4-33 or 4-34).
		●			b. Adjust brakes (para 4-33 or 4-34).
		●			c. Check handbrake cable adjustment. Adjust as required (para 4-32).
	●				d. Remove plug from bottom of air filter and allow all fluid to drain (para 4-45).
		●			e. Remove and clean air filter element. Replace if unserviceable (para 4-45).
5				WHEELS AND TIRES	
	●				a. Inspect tires for wear and damage. Check tread depth (TM 9-2610-200-24).
	●				b. Tighten wheel nuts to 340-370 lb.-ft. (461-502 N•m) (para 3-8).
6				SUSPENSION	
		●			Inspect springs for bent or cracked leaves, loose mounting, and worn components (para 4-58).
7				ADJUSTABLE CASTER ASSEMBLY	
	●				a. Inspect for bent and broken components (para 4-54).
	●				b. Inspect release handle for proper operation (para 4-54).

Section IV. UNIT TROUBLESHOOTING PROCEDURES

Paragraph Title	Page Number
Explanation of Columns	4-6
General	4-6
Unit Troubleshooting, Table 4-2.	4-7
Troubleshooting Symptom Index	4-7

4-12. GENERAL.

a. This section provides information for identifying and correcting malfunctions which may develop when operating or maintaining the trailer.

b. The Troubleshooting Symptom Index in paragraph 4-14 lists common malfunctions which may occur and refers you to the proper page in Table 4-2 for a troubleshooting procedure.

c. This section cannot list all malfunctions that may occur, nor all tests or inspections and corrective actions. If a malfunction is not listed, or is not corrected by the listed corrective actions, notify your supervisor,

d. When troubleshooting a malfunction:

(1) Question the operator to obtain any information that might help determine the cause of the problem. Before continuing, ensure that all applicable operator/crew troubleshooting was performed.

(2) Locate the symptom (s) in paragraph 4-14 that best describes the malfunction. If the appropriate symptom is not listed, notify your supervisor.

(3) Turn to the page in Table 4-2 where the troubleshooting procedures for the malfunction in question are described. Headings at the top of each page show how each troubleshooting procedure is organized: MALFUNCTION, TEST OR INSPECTION (in step number order), and CORRECTIVE ACTION.

(4) Perform each step in the order listed until the malfunction is corrected. DO NOT perform any maintenance task unless the troubleshooting procedure tells you to do so.

4-13. EXPLANATION OF COLUMNS.

The columns in Table 4-2 are defined as follows:

(1) MALFUNCTION. A visual or operational indication that something is wrong with the trailer.

(2) TEST OR INSPECTION, A procedure to isolate the problem in a component or system.

(3) CORRECTIVE ACTION. A procedure to correct the problem.

4-14. TROUBLESHOOTING SYMPTOM INDEX.

	Troubloshootlng Procedure Page
BRAKE SYSTEM	
Brakes do Not Engage	4-10
Brakes Do Not Release	4-10
ELECTRICAL SYSTEM	
All Lamps Dim or Flickering	4-7
One or More Lamps (But Not All) Fail to night	4-8
110-VOLT ELECTRICAL SYSTEM (M448)	
Circuit Breaker Trips	4-9
No Power	4-9

Table 4-2. Unit Troubleshooting.

MALFUNCTION	TEST OR INSPECTION	CORRECTIVE ACTION

ELECTRICAL SYSTEM

1. ALL LAMPS DIM OR FLICKERING.

WARNING

When troubleshooting an electrical malfunction, ALWAYS disconnect inter vehicular electrical cablefrom. towing vehicie. Failure to do so may result in injury or death due to electric shock,

NOTE

Refer to paragraph 4-27 to determine routing of electrical wires and location of electrical components.

Step 1. Check continuity between terminal ground wire 90 and frame drawbar.

If there is no continuity, remove and clean mating surfaces (para 4-26).

Step 2. Check continuity between terminal ground wire 90 and socket of inter vehicular cable plug,

if there is no continuity, replace intervehicular cable (para 4-26).

Table 4-2, Unit Troubleshooting (Con't).

MALFUNCTION TEST OR inspection	CORRECTIVE ACTION

2. ONE OR MORE LAMPS (BUT NOT ALL) FAIL TO LIGHT.

WARNING

When troubleshooting an electrical malfunction, ALWAYS disconnect Inter vehicular electrlcal cable from towing vehicle. Failure to do so may result in injury or death due to electric shock.

NOTE

Refer to paragraph 4-27 to determine routing of electrical wires and location of electrical components.

Step 1. Check affected lamps.

Replace lamps (para 4-21, 4-22, or 4-23).

Step 2. Check continuity between edge of lamp socket and frame.

If there is no continuity, remove and clean mating surfaces (para 4-21, 4-22, or 4-23).

Step 3. Check continuity between center post of lamp socket and related light assembly plug connectors.

If there is no continuity, replace affected light assembly (para 4-21, 4-22, or 4-23).

Step 4. Check related chassis wiring harness plug connectors for presence of 24 volts.

If 24 volts are not present, proceed to step 5.

Step 5. Check related inter vehicular cable plug connectors for presence of 24 volts.

If 24 volts are present, replace chassis wiring harness (para 4-24).

Step 6. Check towing vehicle receptacle pin connector for presence of 24 volts.

If 24 volts are present, replace intervehicular cable (para 4-26).

If 24 volts are not present, refer to the towing vehicle unit maintenance manual.

Table 4-2. Unit Troubleshooting (Con't).

MALFUNCTION
TEST OR INSPECTION
CORRECTIVE ACTION

110-VOLT ELECTRICAL SYSTEM (M448)

3. CIRCUIT BREAKER TRIPS.

WARNING

When troubleshooting an electrical malfunction, ALWAYS disconnect Intervehicular electrical cable from towing vehicle. Failure to do so may result in injury or death due to electric shock.

NOTE

Refer to paragraph 4-27 to determine routing of electrical wires and location of electrical components.

Step 1. With equipment unplugged from outlet and auxiliary power cable connected, turn circuit breaker off, then on.

If circuit breaker still trips, disconnect auxiliary power cable (para 2-15). Proceed to step 2.

WARNING

To prevent electric shock, auxiliary power cable must be disconnected. Failure to do so may result in serious injury or death.

Step 2. Check for loose or broken wires in 110-volt electrical system.

Tighten or replace wires (para 4-69).

4. NO POWER.

WARNING

When troubleshooting an electrical malfunction, ALWAYS disconnect Intervehicular electrical cable from towing vehicle. Failure to do so may result in injury or death due to electric shock.

NOTE

Refer to paragraph 4-27 to determine routing of electrical wires and location of electrical components.

Step 1. Check for unserviceable circuit breaker (para 4-70).

Replace circuit breaker (para 4-69).

Table 4-2. Unit Troubloshootlng (Con't).

MALFUNCTION TEST OR INSPECTION CORRECTIVE ACTION

4. NO POWER.

step 2. Check for unserviceable auxiliary power cable (para 4-70).

Replace auxiliary power cable (Appendix C).

Step 3. Check for loose or broken wires.

If loose or broken, tighten or replace wires (para 4-69 or 4-71).

Step 4. Check for unserviceable outlets (para 4-70).

Replace outlets (para 4-69).

BRAKE SYSTEM

5. BRAKES DO NOT RELEASE.

Step 1. Check handbrake cable for binding and proper adjustment.

Replace or adjust as required (para 4-30, 4-31, or 4-32).

Step 2. In cold weather, check for frozen brakeshoe linings.

Remove wheel (para 3-8). Heat brakedrum to thaw.

NOTE

Step 3 applies to all models except M105A2C.

Step 3. Check for proper brake adjustment.

Adjust brakes (para 4-33 or 4-34).

NOTE

Step 4 applies only to M105A2C.

Step 4. Check for obstruction in service or emergency vacuum hoses or lines.

Clear obstruction or replace affected hose or line (para 4-42).

6. BRAKES DO NOT ENGAGE.

NOTE

Step 1 applies only to M105A2C.

Step 1. Check fluid level in hydraulic tank and master cylinder.

Fill hydraulic tank and master cylinder to within ½ in. (13 mm) from top (Chapter 3, Section 1). Bleed brakes (para 4-39).

Table 4-2. Unit Troubloshooting (Con't).

MALFUNCTION
TEST OR INSPECTION
CORRECTIVE ACTION

NOTE

Stop 2 applies to all models except M105A2C.

Step 2. Check fluid level in master cylinder,

Fill master cylinder to within ½ in. (13 mm) from top (Chapter 3, Section 1). Bleed brakes (para 4-39).

Step 3. Check air filter for obstructions.

Replace air filter (para 4-45).

Step 4. Check for obstruction in service air hose or line.

Clear obstruction or replace hose or line (para 4-46).

Step 5. Check for worn brakeshoe linings. Brakeshoe linings should have a minimum thickness of 1/8 in. (3.2 mm).

Replace worn brakeshoes (para 4-33 or 4-34).

Section V. GENERAL MAINTENANCE INSTRUCTIONS

Paragraph Title	Page Number
Cleaning instructions	4-13
General	4-12
Inspection Instructions	4-14
Repair instructions	4-14
Tagging Wires and Hoses	4-14
Work Safety	4-12

4-15. GENERAL.

a. These general maintenance instructions contain general shop practices and specific methods you must be familiar with to properly maintain your trailer. You should read and understand these practices and methods before performing any unit maintenance tasks.

b. Before beginning a task, find out how much repair, modification, or replacement is needed to fix the equipment. Sometimes the reason for equipment failure can be seen right away, and complete teardown is not necessary. Disassemble equipment only as far as necessary to repair or replace damaged or broken parts.

c. The following “initial Setup” information applies to all procedures:

(1) Resources are not listed unless they apply to the procedure.

(2) Personnel are listed only if more than one technician is required to complete the task, If “Personnel Required” is not listed, one technician can complete the task.

d. All tags and forms attached to equipment must be checked to learn the reason for equipment’s removal from service, Modification Work Orders (MWO) and Technical Bulletins (TB) must also be checked for equipment changes and updates.

e. In some cases, a part may be damaged by removal. If the part appears to be good, and other parts behind it are not defective, leave it on and continue with the procedure. Here area few simple rules:

(1) Do not remove dowel pins or studs unless loose, bent, broken, or otherwise damaged.

(2) Do not remove bearings or bushings unless damaged. If you need to remove them to access parts behind, pull bearings and bushings out carefully.

(3) Replace all gaskets, seals, and preformed packings.

4-16. WORK SAFETY.

a. Observe all WARNINGS and CAUTIONS. Always use power tools carefully.

b. Protect yourself against injury. Wear protective gear such as safety goggles or lenses, safety shoes, rubber apron, or gloves.

c. When lifting heavy parts, have someone help you. Ensure that lifting/jacking equipment is working properly, is suitable for the assigned task, and is secure against slipping.

4-17. CLEANING INSTRUCTIONS.

WARNING

Improper cleaning methods and use of unauthorized cleaning liquids or solvents can injure personnel and damage equipment. To prevent this, refer to TM 9-247 for further instructions.

a. General. Cleaning instructions will be the same for a majority of parts and components which make up the trail. The following should apply to all cleaning operations:

(1) Clean all parts before inspection, after repair, and before assembly.

(2) Keep hands free of grease which can collect dust, dirt, and grit.

(3) After cleaning, all parts should be covered or wrapped to protect them from dust and dirt. Parts that are subject to rust should be lightly oiled.

b. Steam Cleaning

(1) Before steam cleaning exterior of trailer, protect all electrical equipment which could be damaged by steam or moisture.

(2) Place disassembled parts in a suitable container to steam clean. Parts that are subject to rust should be dried and lightly oiled after cleaning.

c. Castings, Forgings, and Machined Metal Parts.

WARNING

Dry cleaning solvent P-D-680 is toxic and flammable, Always wear protective goggles and gloves, and use only in a well-ventilated area. Avoid contact with skin, eyes and clothes, and DO NOT breathe vapors. DO NOT use near open flame or excessive heat. The solvent's flash point is 100°F-130°F (38°C-59°C). If you become dizzy while using cleaning solvent, immediately get fresh air and medical help. If solvent contacts eyes, immediately wash your eyes and get medical aid.

(1) Clean inner and outer surfaces with dry cleaning solvent (Item 6, Appendix E).

(2) Remove grease and accumulated deposits with a stiff bristle brush.

WARNING

Compressed air used for cleaning or drying purposes, or for clearing restrictions, should never exceed 30 psi (207 kPa). Wear protective clothing (goggles/shield, gloves, etc.) and use caution to avoid injury to personnel.

(3) Clear all threaded holes with compressed air to remove dirt and cleaning fluids.

CAUTION

Do not wash oil seals, electrical cables, and flexible hoses with dry cleaning solvent or mineral spirits. Serious damage or destruction of material would result.

d. Oil Seals, Electrical Cables, and Flexible Hose. Wash electrical cables and flexible hose with a solution of soap (Item 5, Appendix E) and water and wipe dry.

e. Bearings. Clean bearings in accordance with TM 9-214.

4-18. INSPECTION INSTRUCTIONS.

NOTE

All damaged areas should be marked for repair or replacement.

a, All components and parts must be carefully checked to determine if they are serviceable for use, can be repaired, or must be scrapped,

b. inspect drilled and tapped (threaded) holes for the following:

(1) Wear, distortion, cracks, and any other damage in or around holes.

(2) Threaded areas for wear distortion (stretching), and evidence of cross-threading.

c. Inspect metal lines, fiexible lines (hoses), and metal fittings for the following:

(1) Metal lines for sharp kinks, cracks, bad bends, and dents.

(2) Fiexible lines for fraying, evidence of leakage, and loose metal fittings or connectors.

(3) Metal fittings and connectors for thread damage and worn or rounded hex heads.

d. Inspect castings, forgings, and machined metal parts for the following:

(1) Machined surfaces for nicks, burrs, raised metal, wear, and other damage.

(2) Inner and outer surfaces for breaks and cracks.

e. inspect air lines, fittings, and connectors for leaks by coating them with a solution of soap (Item 5, Appendix E) and water, No leakage is permissible.

f. inspect bearings in accordance with TM 9-214,

4-19. REPAIR INSTRUCTIONS.

a. Repair casting, forgings, and machined metal parts using the following instructions:

(1) Repair minor cracked casting or forgings in accordance with TM 9-237.

(2) Repair minor damage to machined surfaces with a fine mill file or an abrasive cloth (item 4, Appendix E) dipped in dry cleaning solvent (item 6, Appendix E).

(3) Replace any deeply nicked machined surface that could affect the assembly operation.

(4) Repair minor damage to threaded capscrew holes with thread tap of same size to prevent cutting oversize.

b. Refer to paragraphs 4-37 and 4-42 for maintenance on metal lines, flexibie lines (hoses), and metal fittings.

c. After repair, clean all parts thoroughly to prevent dirt, metal chips, or other foreign material from entering any working parts.

4-20. TAGGING WIRES AND HOSES.

a. As soon as first wire or hose is disconnected, write number” 1“ on two tags. Secure one tag to wire or hose and other tag to terminal, nipple, or fitting. After disconnecting second wire or hose, write number” 2” on two tags. Secure one tag to wire or hose, and second tag to terminal, nipple, or fitting. Do the same for all hoses and fittings.

4-20. TAGGING WIRES AND HOSES (Con't).

b. Note which numbers you used, in pencil, on art in manual. This will help you accurately retag, if tags are removed to perform cleaning and maintenance work,

c. Remove all tags when finished.

Section VI. ELECTRICAL SYSTEM MAINTENANCE

Paragraph Title	Page Number
Blackout Stoplight Maintenance	4-15
Chassis Wiring Harness Replacement	4-24
Composite Marker Light Maintenance	4-22
Intervehicular Cable Replacement	4-28
Service and Blackout Taillight Maintenance	4-18
Wiring Diagrams	4-30
Wiring Harness Repair	4-26

4-21. BLACKOUT STOPLIGHT MAINTENANCE.

This Task Covers:

a. Lamp Replacement
b. Removal
c. Installation

Initial Setup:

Equipment Conditions:

- Intervehicular cable disconnected from towing vehicle (para 2-12).

Tools/Test Equipment:

- General mechanic's tool kit:

Materiais/Parts:

- One lockwasher

4-21. BLACKOUT STOPLIGHT MAINTENANCE (Con't).

a. LAMP REPLACEMENT

1. Remove two screws (1) and door (2) from housing (4).
2. Inspect gasket (3) for damage. If damaged, remove and discard.
3. Remove lamp (6) from socket (5) by pushing lamp in and turning counterclockwise.
4. Install new lamp (6) in socket (5) by pushing lamp in and turning clockwise.
5. If removed, install new gasket (3) in door (2).
6. Install door (2) on housing (4) with two screws (1).

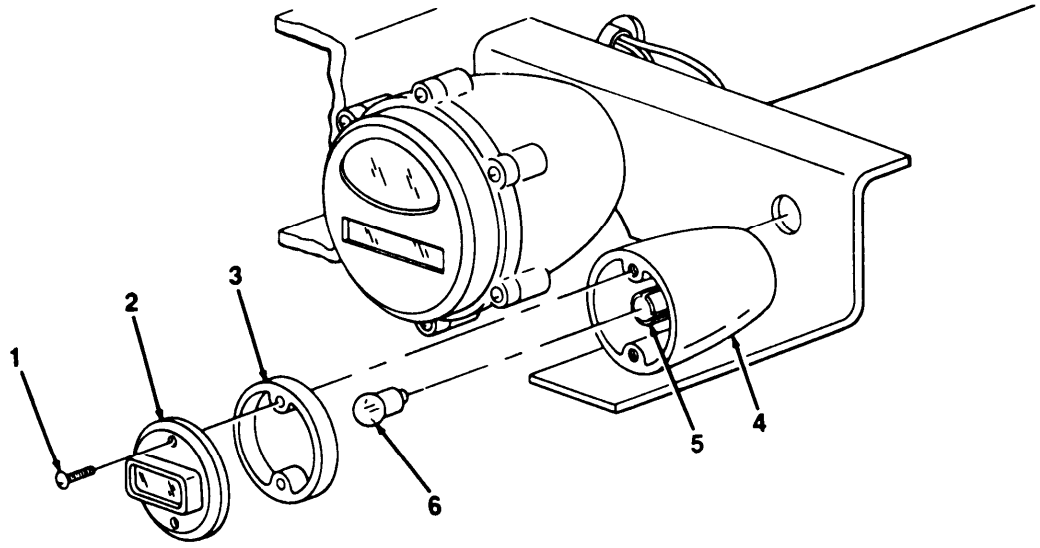

b. REMOVAL

1. Disconnect plug connector (7) from housing (4).
2. Remove bolt (9), lockwasher (10), and housing (4) from bracket (8). Discard lockwasher.

c. INSTALLATION

1. Install housing (4) on bracket (8) with new lockwasher (10) and bolt (9).
2. Connect plug connector (7) to housing (4).

TA505251

4-21. BLACKOUT STOPLIGHT MAINTENANCE (Con't).

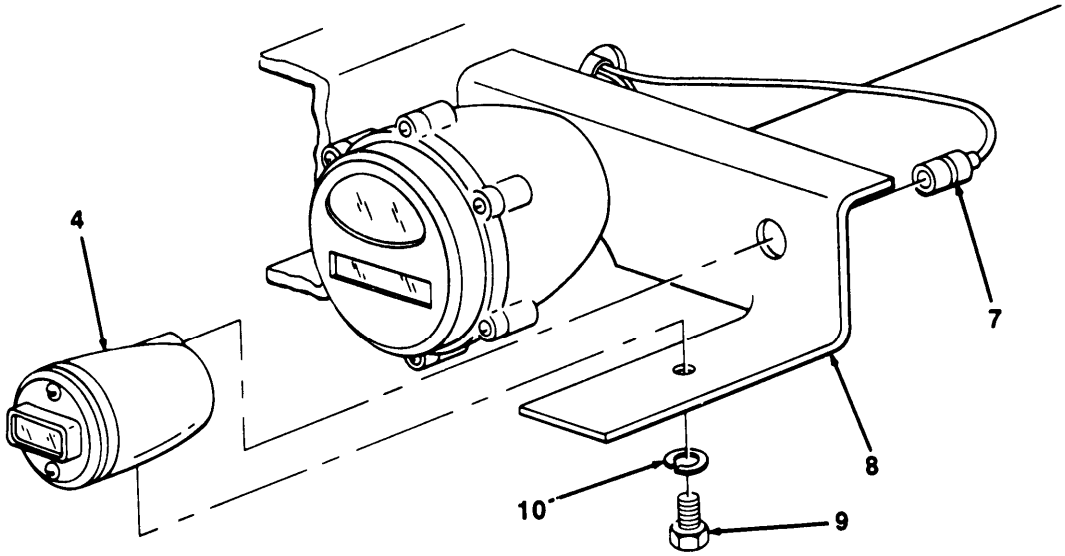

FOLLOW-ON TASKS:

- Connect intervehicular cable to towing vehicle (para 2-10).
- Check operation of light.

TA505252

4-22. SERVICE AND BLACKOUT TAILLIGHT MAINTENANCE.

This Task Covers:

a. Lamp Replacement
b. Removal
c. Installation

Initial Setup:

Equipment Conditions:

- Intervehicular cable disconnected from towing vehicle (para 2-1 2).

Tools/Test Equipment:

- General mechanic's tool kit

Materials/Parts:

- Marker tags (as required) (item 16, Appendix E)
- Two lockwashers

a. LAMP REPLACEMENT

NOTE

Service taillight lamps and blackout taillight lamps are replaced the same way except blackout taillight has two lamps and service taillight has three lamps.

1. Loosen six screws (2) and remove door (1) from body (4).
2. inspect preformed packing (8) for damage. if damaged, remove and discard.
3. Remove two lamps *(6)* and lamp (7) from sockets (3) and socket (5) by pushing lamps in and turning counterclockwise.
4. Install two new lamps (6) and lamp (7) in sockets (3) and socket (5) by pushing lamps in and turning clockwise.

TA505253

4-22. SERVICE AND BLACKOUT TAILLIGHT MAINTENANCE (Con't).

5. If removed, install new preformed packing (8) in door (1).

6. Install door (1) on body (4) and tighten six screws (2).

b. REMOVAL

NOTE

Service taillight and blackout taillight are removed the same way except blackout taillight has two plug connectors and service taillight has three plug connectors.

1. Tag wires for installation if identification bands are missing or not legible (para 4-20).

2. Remove three plug connectors (11 and 12) from clips (13) and disconnect.

3. Remove grommet (10) from framerail (9). Discard grommet if damaged.

4. Remove three plug connectors (11) through hole in framerail (9).

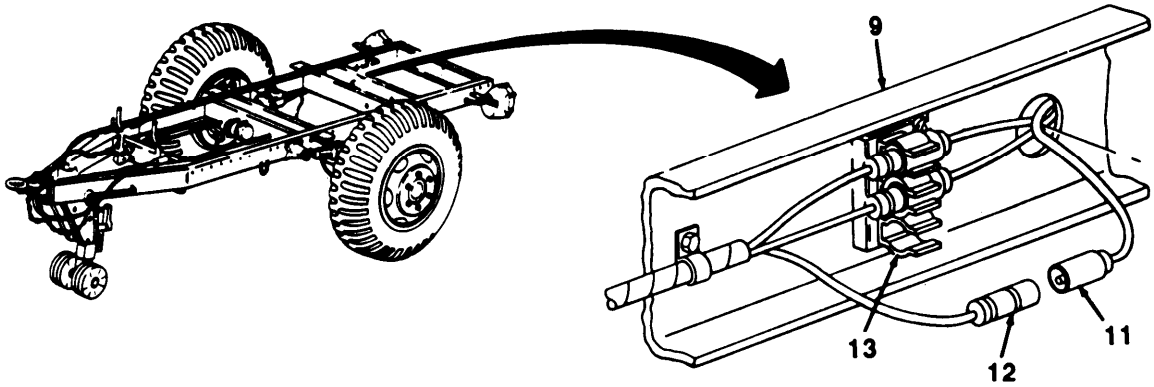

TA505254

4-22. SERVICE AND BLACKOUT TAILLIGHT MAINTENANCE (Con't).

5. Remove two screws (14), lockwashers (15), and body (4) from bracket (16). Discard lockwashers.

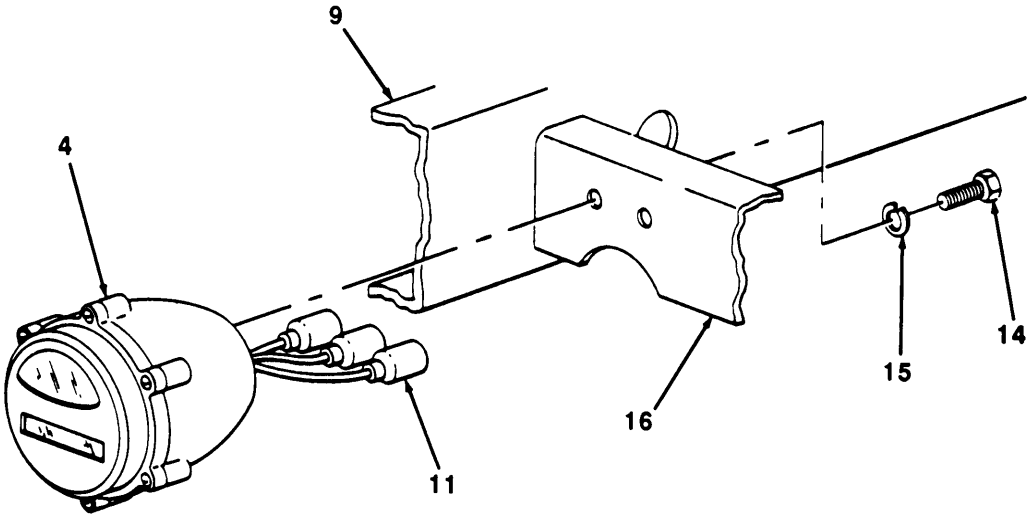

c. INSTALLATION

NOTE

Service taillight and blackout taillight are Installed the same way except blackout taillight has two plug connectors and service taillight has three plug connectors.

1. Install body (4) on bracket (16) with two new lockwashers (15) and screws (14).
2. Insert three plug connector (11) through hole in framerail (9).
3. Install grommet (10) in framerail (9).
4. Connect three plug connectors (11 and 12) and install in clips (13).

TA505255

4-22. SERVICE AND BLACKOUT TAILLIGHT MAINTENANCE (Con't).

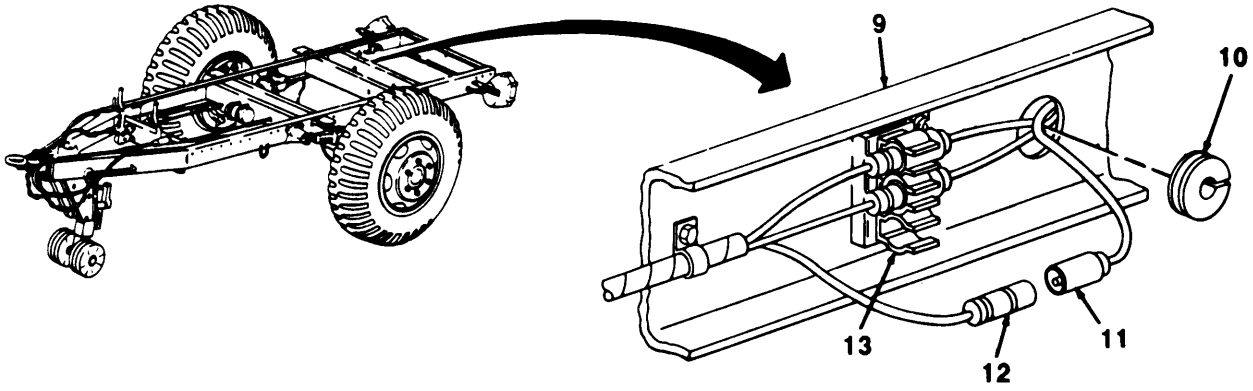

FOLLOW-ON TASKS:

- Connect intervehicular cable to towing vehicle (para 2-10).
- Check operation of light.

TA505256

4-23. COMPOSITE MARKER LIGHT MAINTENANCE.

This Task Covers:

a. Lamp Replacement
b. Removal
c. Installation

Initial Setup:

Equipment Conditions:

- Intervehicular cable disconnected from towing vehicle (para 2-12).

Tools/Test Equipment:

- General mechanic's tool kit

Materlal/Parts:

- Marker tags (as required) (Item 16, Appendix E)
- Two lockwashers

a. LAMP REPLACEMENT

1. Loosen six screws (2) and remove lens (1) from body (8).
2. Inspect preformed packing (3) for damage. If damaged, remove and discard.
3. Remove four lamps (4, 5, and 10) from sockets (6, 7, and 9) by pushing lamps in and turning counter-clockwise.
4, Install new lamps (4, 5, and 10) in sockets (6, 7, and 9) by pushing lamps in and turning clockwise.
5. If removed, install new preformed packing (3) in lens (1).
6. Install lens (1) on body (8) and tighten six screws (2).

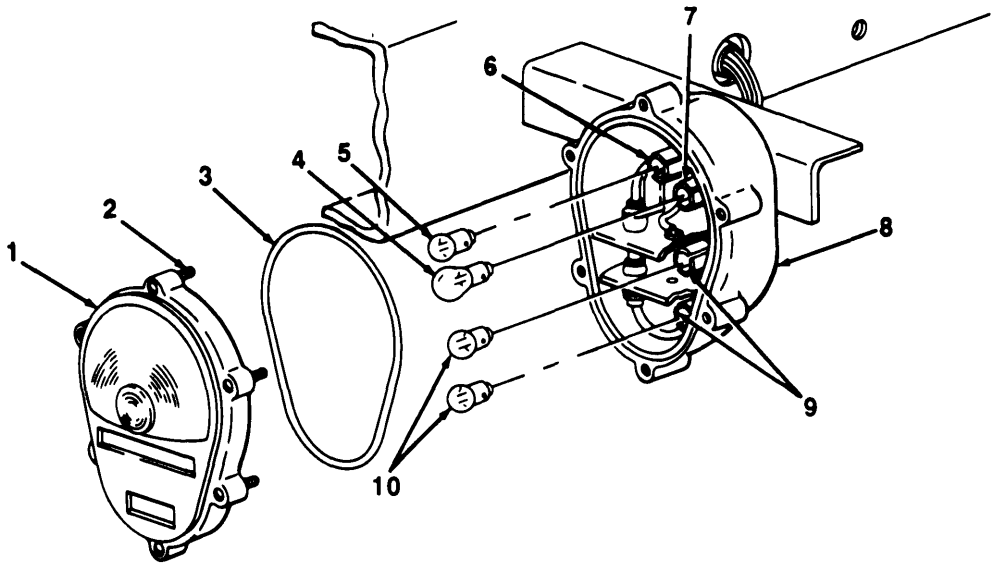

TA505257

4-23. COMPOSITE MARKER LIGHT MAINTENANCE (Con't).

b. REMOVAL

1. Tag wires for installation if identification bands are missing or not legible (para 4-20),
2. Remove four plug connectors (13 and 14) from clips (15) and disconnect.
3. Remove grommet (12) from framerail (11). Discard grommet if damaged.
4. Remove four plug connectors (13) through hole in framerail (11).
5. Remove two screws (16), lockwashers (17), and body (8) from bracket (18), Discard lockwashers.

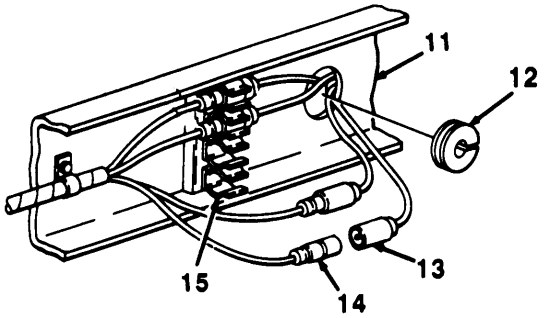

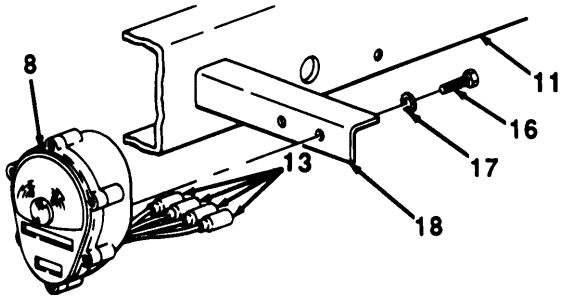

c. INSTALLATION

1. Install body (8) on bracket (18) with two new lockwashers (17) and screws (16).
2. Insert four plug connectors (13) through hole in framerail (11).
3. Install grommet (12) in framerail (11).
4. Connect four plug connectors (13 and 14) and install in clips (15).

FOLLOW-ON TASKS:

- Connect intervehicular cable to towing vehicle (para 2-10).
- Check operation of light.

TA505258

4-24. CHASSIS WIRING HARNESS REPLACEMENT.

This Task Covers:

a. Removal

b. Installation

Initial Setup:

Equipment Conditions:

- InterVehicular cable disconnected from towing vehicle (para 2-12).

Tools/Test Equipment:

- General mechanic's tool kit

Materials/Parts:

- Marker tags (as required) (Item 16, Appendix E)

NOTE

Chassis wiring harness (2) removal is the same for all models except Ml 05A1 and M107A1 which have five plug connectors (8) at front of trailer. All other models have six plug connectors.

1. Tag wires for installation if identification bands are missing or not legible (para 4-20).
2. Remove six plug connectors (7 and 8) from clips (6) and disconnect.
3. Remove screws (9) and clamps (1 O) from drawbar (11).
4. Remove three plug connectors (12 and 13) from clips (14) and disconnect. Repeat on opposite side of trailer.
5. Remove eight screws (1), clamps (3), and chassis wiring harness (2) from framerail (5) and crossmember (4).

b. INSTALLATION

NOTE

Chassis wiring harness (2) installation is the same for all models except Ml 05A1 and Ml 07A1 which have five plug connectors (8) at front of trailer. All other models have six plug connectors.

1. Position chassis wiring harness (2) and clamps (3) on framerail (5) and crossmember (4) and install eight screws (1).
2. Connect three plug connectors (12 and 13) and install in clips (14). Repeat on opposite side of trailer.
3. Connect six plug connectors (7 and 8) and install in clips (6).
4. Secure chassis wiring harness (2) to drawbar (11) with clamps (10) and screws (9).

4-24. CHASSIS WIRING HARNESS REPLACEMENT (Con't).

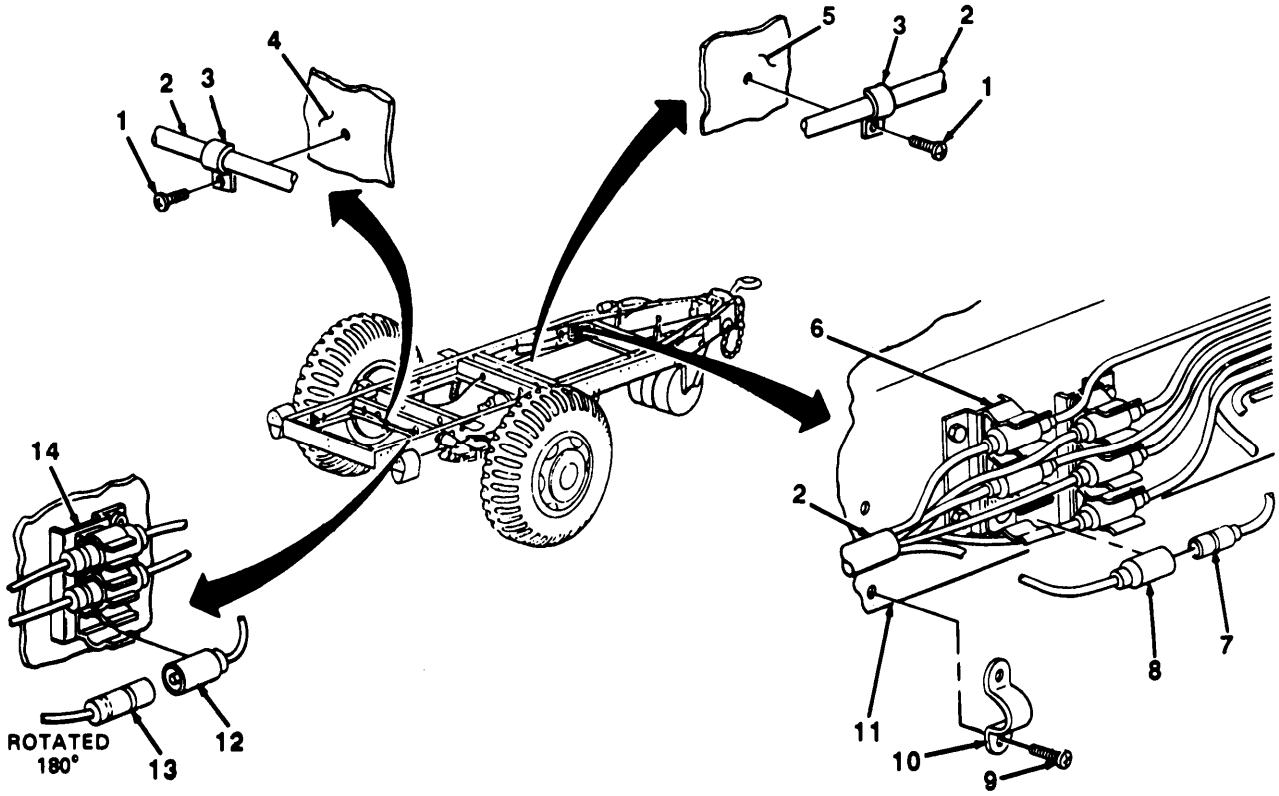

FOLLOW-ON TASKS:

- Connect Intervehicular cable to towing vehicle (para 2-10).
- Check operation of light.

TA605269

4-25. WIRING HARNESS REPAIR.

This Task Covers:

a. Identification Band Replacement
b. Terminal Replacement
c. Male Connector Repair
d. Female Connector Repair

Initial Setup:

Equipment Conditions:

- Intervehicular cable disconnected from towing vehicle (para 2-12).

Tools/Test Equipment:

- General mechanics tool kit
- Common No. 2 shop set
- Electric etcher

Materials/Parts:

- Contacts (as required)
- Identification bands (as required)
- Terminals (as required)

a. IDENTIFICATION BAND REPLACEMENT

1. Remove identification band (2) from wire lead (1) and discard.
2. Mark new identification band (2) with proper identification number.
3. Position new identification band (2) on wire lead (1) and bend tabs over wire lead.

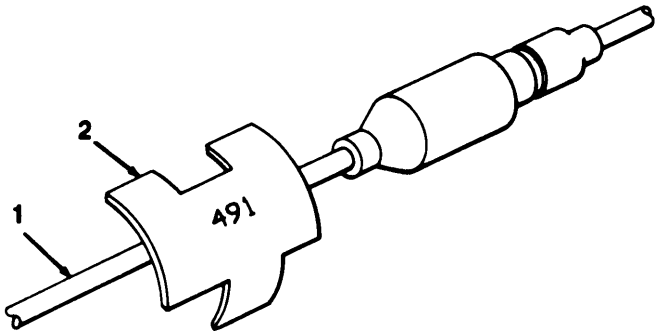

b. TERMINAL REPLACEMENT

1. Cut terminal (3) off wire lead (4) and discard.
2. Strip insulation off wire lead (4) equal to depth of new terminal (3).
3. Position new terminal (3) on wire lead (4). Crimp terminal.

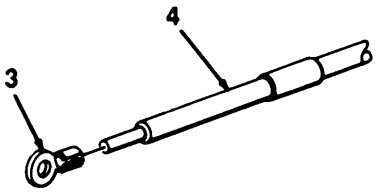

TA505260

4-25. WIRING HARNESS REPAIR (Con't).

c. MALE CONNECTOR REPAIR

1. Slide shell (7) back and remove washer (8) from wire lead (6), Cut contact (5) from wire lead and discard. Remove shell.
2. Strip insulation off wire lead (6) equal to depth of new contact (5).
3. Slide shell (7) on wire lead (6).
4. Position new contact (5) on wire lead (6) and crimp.
5. Position washer (8) on wire lead (6). Slide shell (7) over washer and contact (5).

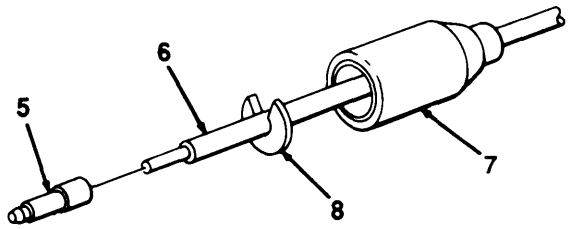

d. FEMALE CONNECTOR REPAIR

1. Slide connector (12) and insulator (11) back and cut terminal (9) from wire lead (10). Discard terminal.
2. Remove insulator (11) and connector (12) from wire lead (10),
3. Strip insulation off wire lead (10) equal to depth of new terminal (9).
4, Slide connector (12) and insulator (11) *on* wire lead (10).
5. Position new terminal (9) on wire lead (10) and crimp.
6. Slide insulator (11) and connector (12) over terminal (9).

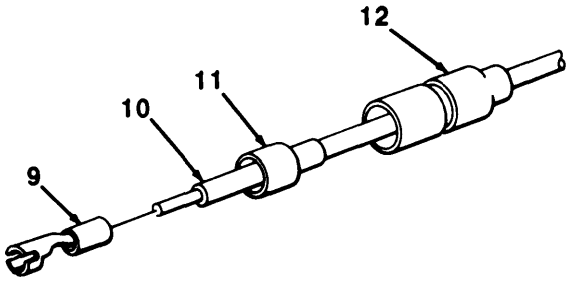

FOLLOW-ON TASKS:

- Connect intervehicular cable to towing vehicle (para 2-10).
- Check operation of lights.

TA505261

4-26. INTERVEHICULAR CABLE MAINTENANCE.

This Task Covers:

a. Removal
b. Installation
c. Repair

Initial Setup:

Equipment Conditions:

- Intervehicular cable disconnected from towing vehicle (para 2-1 2).

Tools/Test Equipment:

- Generai mechanic's tool kit

Materials/Parts:

- Marker tags (as required) (Item 16, Appendix E)

a. REMOVAL

NOTE

Intervehicuiar cable (2) removal is the same for all models except M105A1 and M107A1 which have five plug connectors (9). All other models have six plug connectors.

1. Tag wires for installation if identification bands are missing or not legible (para 4-20).
2. Remove six plug connectors (9 and 10) from clips (1) and disconnect.
3. Remove two screws (5), clip (6), and terminal (7) from drawbar (8).
4. Remove three screws (4), straps (3), and intervehicular cable (2) from drawbar (8).

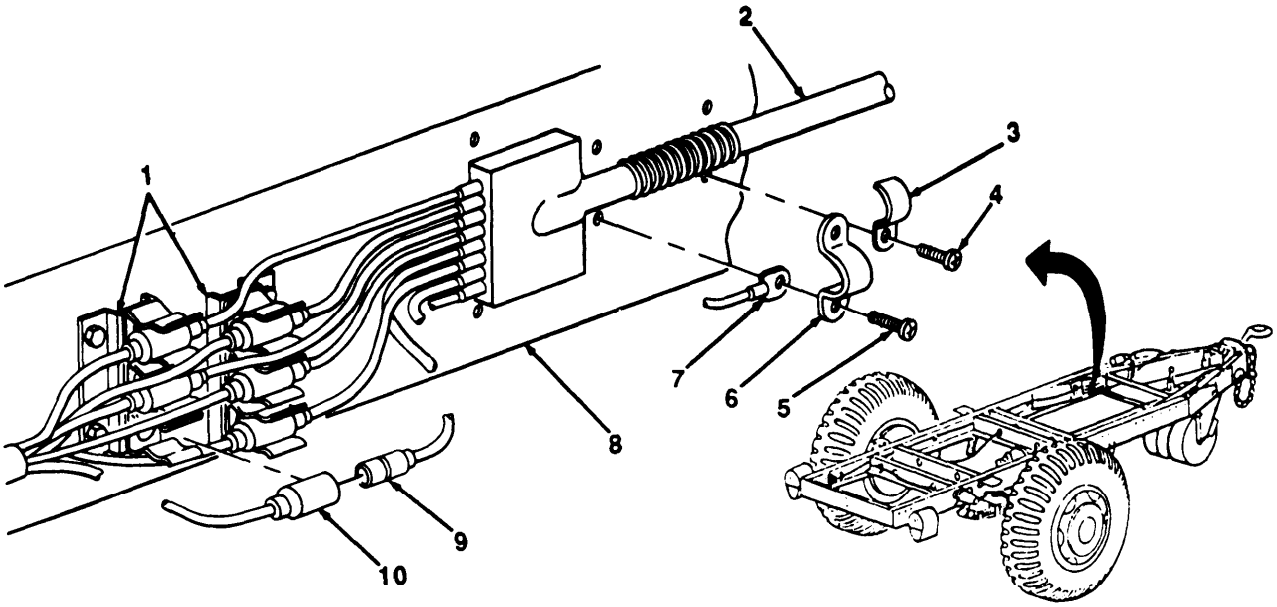

TA505262

4-26. INTERVEHICULAR CABLE MAINTENANCE (Con't).

b. INSTALLATION

NOTE

Intervehicular cable (2) installation is the same for all models except M105A1 and M107A1 which have five plug connectors (9). All other modes have six plug connectors.

1. Position intervehicular cable (2) and three straps (3) on drawbar (8) and install three screws (4).
2. Install terminal (7) and clip (6) on drawbar (8) with two screws (5).
3. Connect six plug connectors (9 and 10) and install in clips (1).

c. REPAIR

NOTE

Repair of intervehicular cable (2) consists of replacement of identification bands, terminal (7) and repair of plug connectors (9).

Refer to paragraph 4-25 for repair instructions.

FOLLOW-ON TASKS:

- Connect intervehicuiar cable to towing vehicle (para 2-10).
- Check operation of lights.

4-27. WIRING DIAGRAMS.

NOTE

- This paragraph contains the trailer wiring diagrams. Refer to these diagrams when performlng electrical troubloshooting and when performing electrical repair and maintenance.
- For information on manufacturing wires, refer to Appendix G.

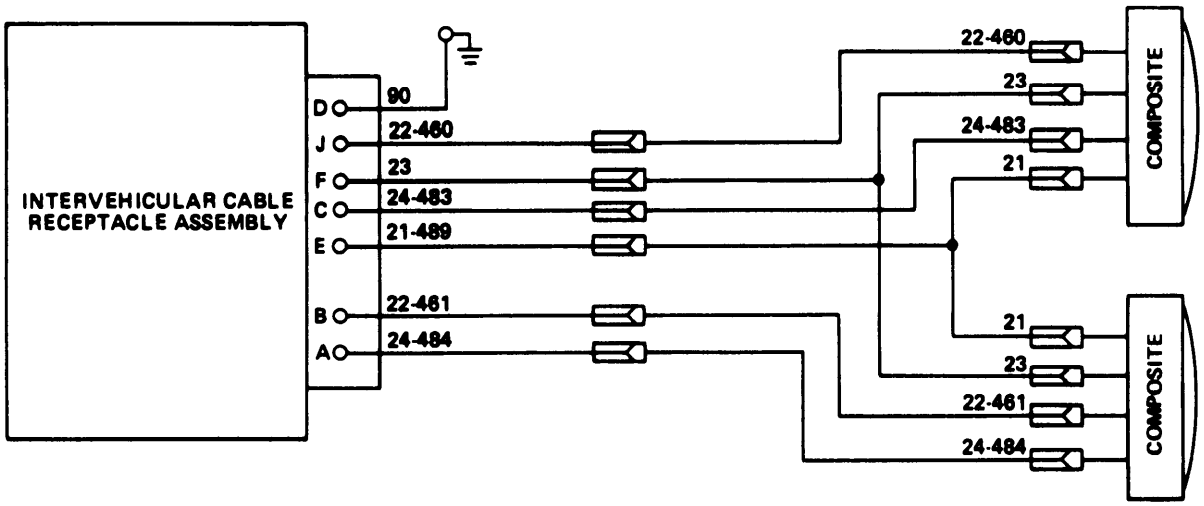

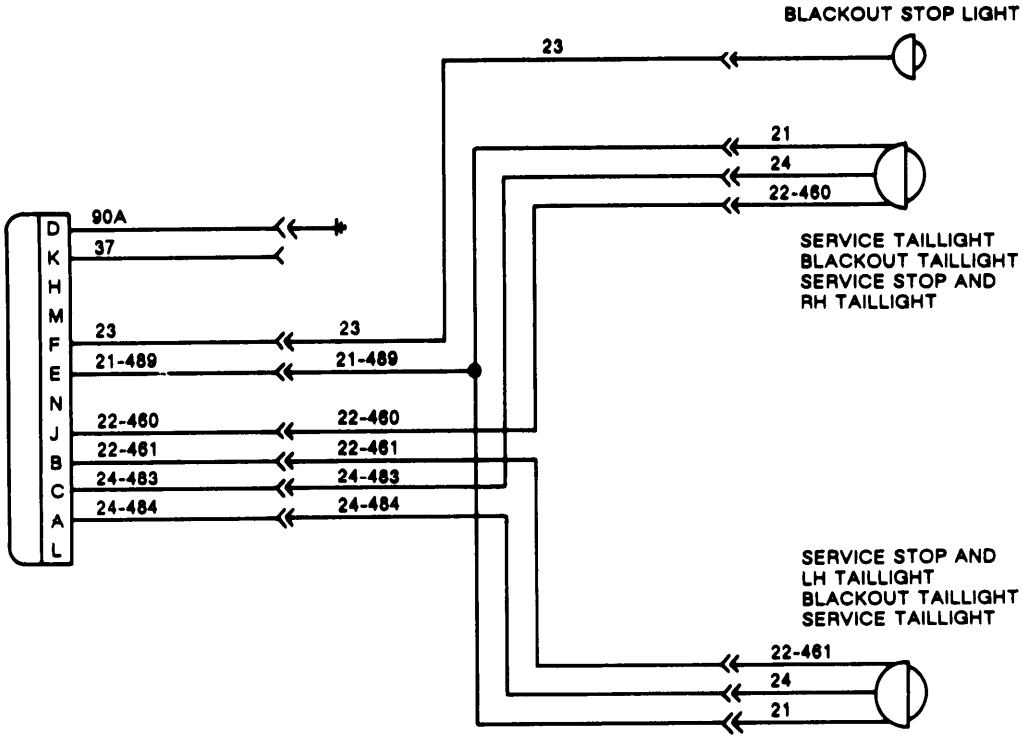

TA505263

Section VII. BRAKE SYSTEM MAINTENANCE

Paragraph Title	Page Number
Airbrake Chamber Replacement	4-70
Air Coupling and Hose Assembly Maintenance	4-74
Air Filter Maintenance	4-72
Air Reservoir Replacement	4-71
Bleeding Hydraulic Brake System	4-61
Emergency Relay Valve Replacement	4-75
Handbrake Cable Adjustment	4-40
Handbrake Cable Replacement (All Except M107A1)	4-34
Handbrake Cable Replacement (M107A1)	4-37
Handbrake Lever Replacement (All Except M107A1)	4-32
Handbrake Lever Replacement (M107A1)	4-33
Hydraulic Lines, Hoses, and Fittings Replacement	4-56
Hydraulic Tank Maintenance (M105A2C)	4-59
Master Cylinder Replacement (Ail Except M105A2C)	4-53
Service Brake Assembly Maintenance (M103A1, M105A1, and M107A1)	4-42
Service Brake Assembly Maintenance (M103A3, M105A2, M105A2C, M107A2, and M107A2C)	4-48
Vacuum Chamber and Master Cylinder Replacement (M105A2C)	4-63
Vacuum Lines, Hoses, and Fittings Replacement (M105A2C)	4-68
Vacuum Quick Coupling Replacement (M105A2C)	4-66
Wheel Cylinder Replacement (All Except M105A2C)	4-55

4-28. HANDBRAKE LEVER REPLACEMENT (ALL EXCEPT M107A1).

This Task Covers:

a. Removal

b. Installation

Initial Setup:

Materials/Parts:

- One cotter pin
- Two lockwashers

Tools/Test Equipment:

- General mechanic's tool kit

a. REMOVAL

WARNING

If trailer is not coupled to towing vehlcle, ensure that wheels are securely chocked. Failure to do so may cause trailer to roll, resulting in Injury to personnel or damage to equipment.

1. Remove cotter pin (3), flatwasher (2), clevis pin (9), and disconnect clevis (5) from handbrake lever (1). Discard cotter pin.
2. Remove two nuts (6), Iockwashers (7), screws (8), and handbrake lever (1) from crossmember (4). Discard Iockwashers.

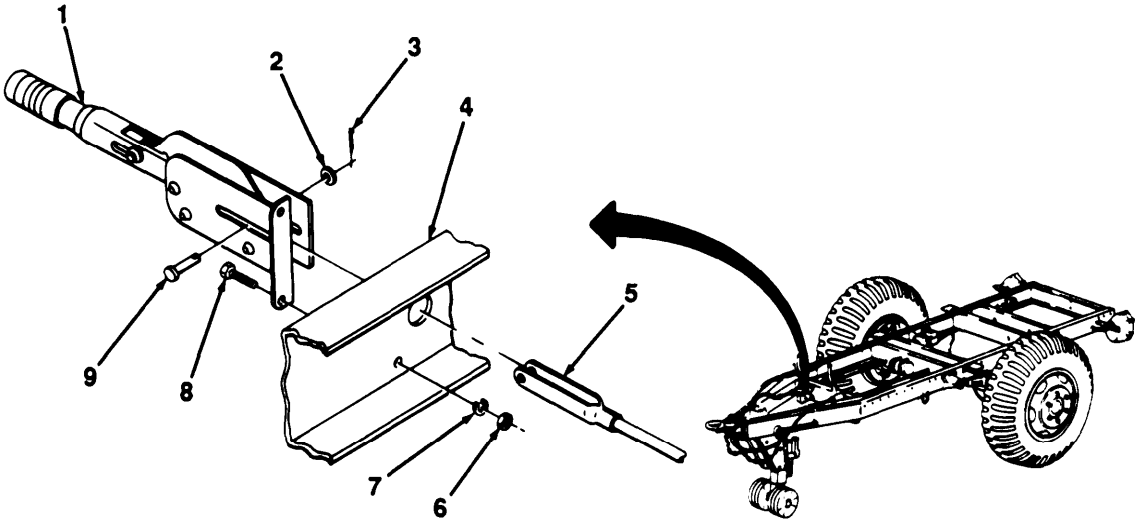

b. INSTALLATION

1. Install handbrake lever (1) on crossmember (4) with two screws *(8),* new Iockwashers (7), and nuts (6).
2. Connect clevis (5) to handbrake lever (1) with clevis pin (9)., flatwasher (2), and new cotter pin (3).

FOLLOW-ON TASKS:

- Adjust handbrake lever (para 3-6).

TA506264

4-29. HANDBRAKE LEVER REPLACEMENT (M107A1).

This Tesk Covers:

a. Removal

b. Installation

Initial Setup:

Materials/Parts:

- One cotter pin
- Two lockwashers

Tools/Test Equipment:

- General mechanic's tool kit

a. REMOVAL

WARNING

If trailer is not coupled to towing vehicle, ensure that wheels are securely chocked. Failure to do so may cause trailer to roil, resulting in injury to personnel or damage to equipment.

1. Remove cotter pin (8) and clevis pin *(2),* and disconnect clevis (1) from handbrake lever (6). Discard cotter pin.
2. Remove two nuts (4), lockwashers (3), bolts (7), and handbrake lever (6) from siderail (5). Discard lockwashers.

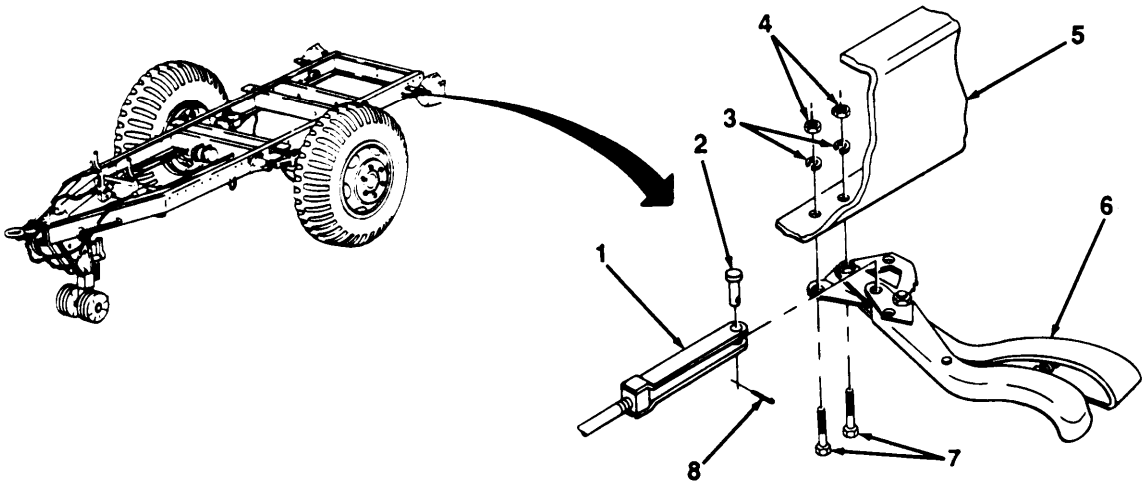

b. INSTALLATION

1. Install handbrake lever (6) on siderail (5) with two bolts (7), new lockwashers (3), and nuts (4).
2. Connect clevis (1) to handbrake lever (6) with clevis pin (2) and new cotter pin (8).

FOLLOW-ON TASKS:

- Adjust handbrake cable (para 4-32).

TA505265

4-30. HANDBRAKE CABLE REPLACEMENT (ALL EXCEPT M107A1).

This Task Covers:

a. Removal

b. Installation

Initial Setup:

Equipment Conditions:

- Hub and brakedrum removed (para 4-49).

Tools/Test Equipment:

- General mechanic's tool kit

Materials/Parts:

- One cotter pin
- Two lockwashers

a. REMOVAL

WARNING

If trailer is not coupled to towing vehicle, ensure that wheels are securely chocked. Failure to do so may cause trailer to roll, resulting in injury to personnel or damage to equipment.

1. Disconnect handbrake cable (3) from brake lever (2).

NOTE

Step 2 applies only to M103A1.

2. Loosen two bolts (5) from bracket (4) and backing plate (1).

NOTE

Step 3 applies only to M103A3.

3. Loosen two nuts (6) from guide bracket (7) and backing plate (1).

4. Pull handbrake cable (3) out from backing plate (1).

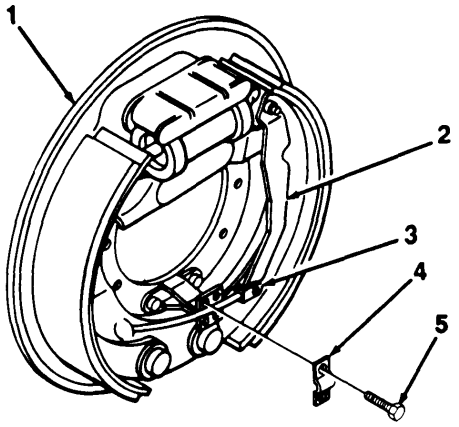

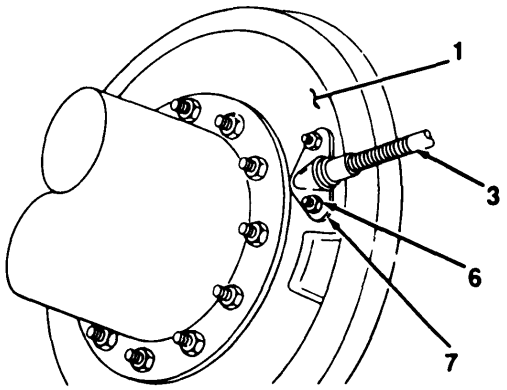

TA505266

4-30. HANDBRAKE CABLE REPLACEMENT (ALL EXCEPT M107A1) (Con't).

5. Loosen two nuts (11) on turnbuckle (12). Remove cotter pin (1 O), flatwasher (9), and clevis pin (20), and disconnect clevis (19) from handbrake lever (8). Discard cotter pin.
6. Remove two nuts (15), lockwashers (16), bolts (13), bracket (14), and handbrake cable (3) from crossmember (17), Discard lockwashers.
7. Remove turnbuckle (12) and two nuts (11) from handbrake cable (3) and rod (18).

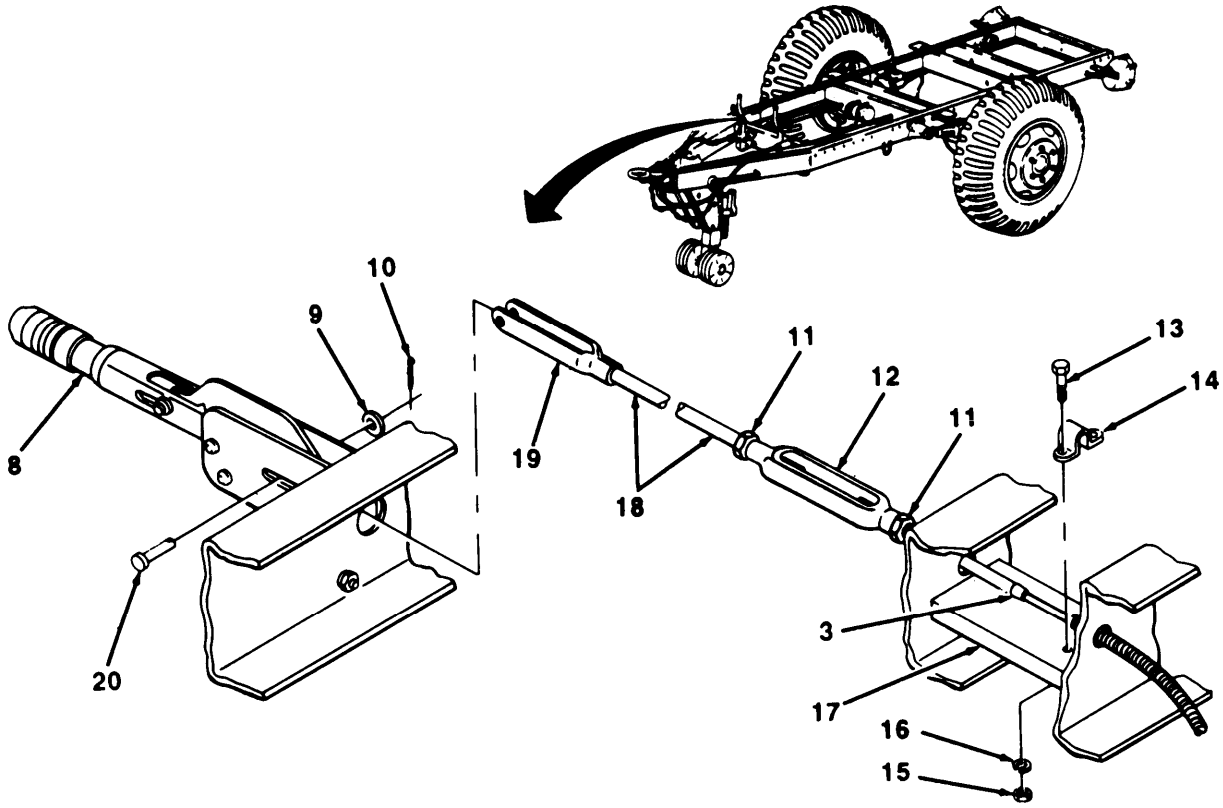

b. INSTALLATION

1. Loosely install turnbuckle (12) and two nuts (11) on handbrake cable (3) and rod (18).
2. Position handbrake cable (3) on trailer. Install handbrake cable and bracket (14) on crossmember (17) with two bolts (13), new lockwashers (16), and nuts (15).
3. Connect clevis (19) to handbrake lever (8) with clevis pin (20), flatwasher (9), and new cotter pin (10).
4. Insert handbrake cable (3) in backing plate (1).

NOTE

Step S applies only to M103A3.

5. Tighten two nuts (6) at guide bracket (7) and backing plate (1).

TA505267

4-30. HANDBRAKE CABLE REPLACEMENT (ALL EXCEPT M107A1) (Con't).

NOTE

Step 6 applies only to M103A1.

6. Tighten two bolts (5) at bracket (4) and backing plate (1).

7. Connect handbrake cable (3) to brake lever (2).

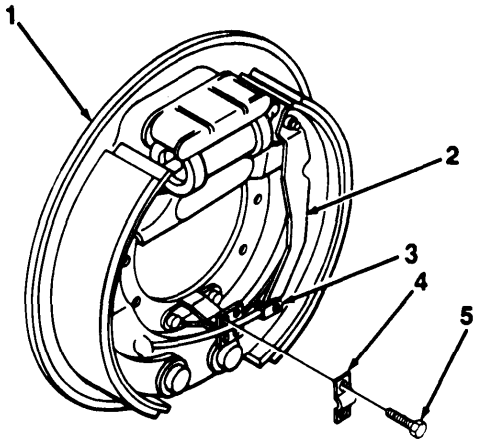

TA505268

FOLLOW-ON TASKS:

- Install hub and brakedrum (para 4-49).
- Adjust handbrake cable (para 4-32).

4-31. HANDBRAKE CABLE REPLACEMENT (M107A1).

This Task Covers:

a. Removal

b. Installation

Initial Setup:

Equipment Conditions:

- Hub and brakedrum removed (para 4-48).

Tools/Test Equipment:

- General mechanic's tool kit

Materials/Parts:

- One cotter pin
- Two lockwashers

a. REMOVAL

WARNING

if trailer is not coupled to towing vehicle, ensure that wheels are securely chocked. Failure to do so may cause trailer to roll, resulting in injury to personnel or damage to equipment.

NOTE

Both handbrake cables (2) are removed the same way. This procedure covers one handbrake cable.

1. Disconnect handbrake cable (2) from brake lever (1).
2. Loosen two bolts (4) from bracket (3) and backing plate (5).

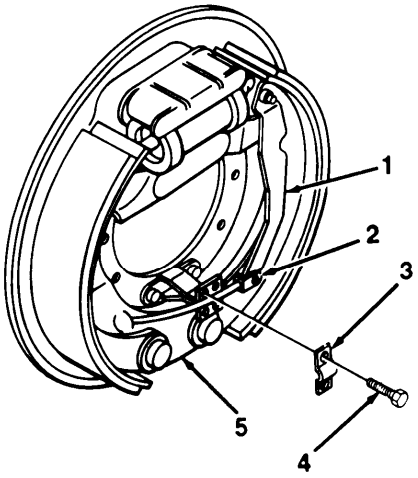

TA505269

4-31. HANDBRAKE CABLE REPLACEMENT (M107A1) (Con't).

3. Remove screw (15) and clip (16) from siderail (8).

4. Remove cotter pin (11) and clevis pin (10), and disconnect clevis (9) from handbrake lever (12). Discard cotter pin.

5. Remove two nuts (6), lockwashers (7), bolts (13), bracket (14), and handbrake cable (2) from siderail (8). Discard lockwashers.

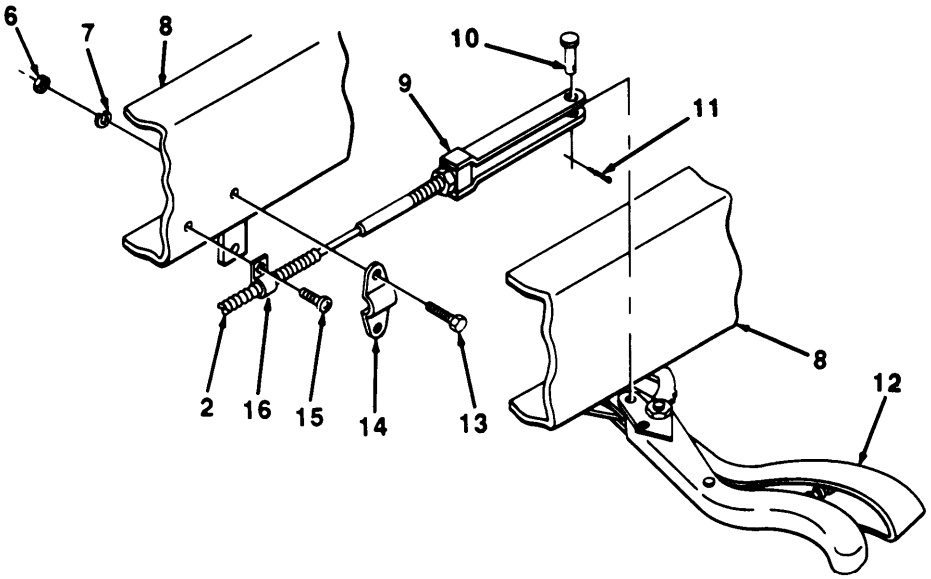

b. INSTALLATION

NOTE

Both handbrake cables (2) are installed the same way. This procedure covers one handbrake cable.

1. Position handbrake cable (2) on trailer, Install handbrake cable and bracket (14) on siderail (8) with two bolts (13), new lockwashers (7), and nuts (6).

2. Connect clevis (9) to handbrake lever (12) with clevis pin (10) and new cotter pin (11),

3. Install clip (16) on siderail (8) with screw (15).

TA505270

4-31. HANDBRAKE CABLE REPLACEMENT (M107A1) (Con't).

4. Position handbrake cable (2) and bracket (3) on backing plate (5) and tighten two bolts (4).

5. Connect handbrake cable (2) to brake lever (1).

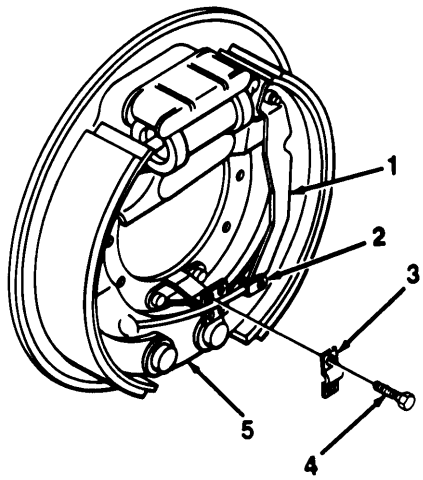

FOLLOW-ON TASKS:

- Install hub and brakedrum (para 4-48),
- Adjust handbrake cable (para 4-32).

TA505271

4-32. HANDBRAKE CABLE ADJUSTMENT.

This Task Covers:

a. Adjustment (All Except M107A1)

b. Adjustment (M107A1)

Initial Setup:

Equipment Conditions:

- Brakes adjusted (para 4-33 or 4-34).

Tools/Test Equipment:

- Generai mechanic's tool kit

Materials/Parts:

- One cotter pin

a. ADJUSTMENT (ALL EXCEPT M107A1)

NOTE

When handbrake cable (4) is properly adjusted, handbrake lever (1) should only require 1/3 of its full travel to apply handbrake.

1. Release handbrake lever (1).
2. If tightened, loosen two nuts (2) on turnbuckle (3). Do not allow handbrake cable (4) to twist.
3. Rotate turnbuckle (3) as required to eliminate excess slack or tension.
4. Tighten two nuts (2) on turnbuckle (3). Do not allow handbrake cable (4) to twist.
5. Check handbrake lever (1) and handbrake cable (4) for proper operation. Adjust as required,

b. ADJUSTMENT (M107A1)

NOTE

When handbrake cable (5) is properly adjusted, handbrake lever (9) should only require 1/3 of its full travel to apply handbrake.

1. Release handbrake lever (9).
2. Loosen nut (6). Remove cotter pin (10) and clevis pin (8), and disconnect clevis (7) from handbrake lever (9). Discard cotter pin.
3. Turn clevis (7) clockwise to tighten or counterclockwise to loosen handbrake cable (5).
4. Tighten nut (6) on handbrake cable (5) and clevis (7).
5. Connect clevis (7) to handbrake lever (9) with clevis pin (8) and new cotter pin (10).
6. Check handbrake lever (9) and handbrake cable (5) for proper operation. Adjust as required.

4-32. HANDBRAKE CABLE ADJUSTMENT (Con't).

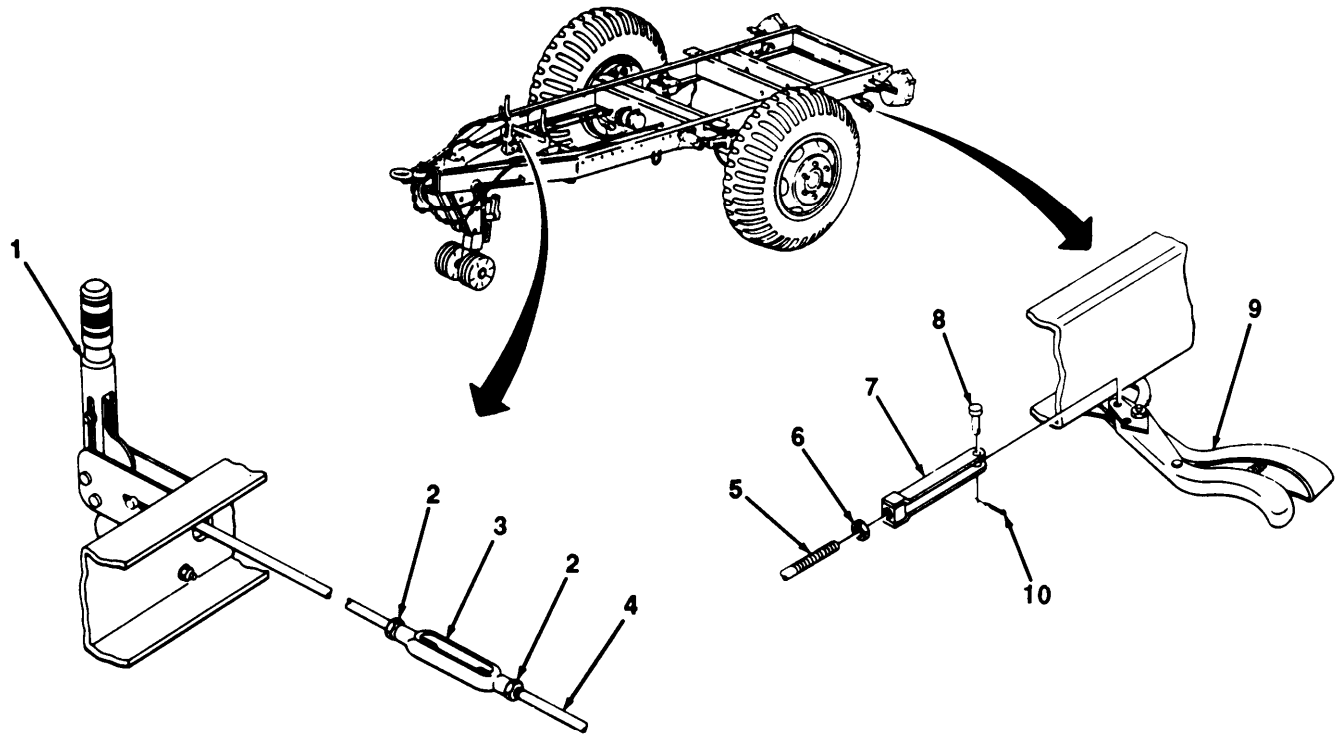

TA505272

4-33. SERVICE BRAKE ASSEMBLY MAINTENANCE (M103A1, M105A1, AND M107A1).

This Task Covers:

a. Disassembly
b. Cleaning and Inspection
c. Assembly
d. Major Adjustment
e. Minor Adjustment

Initial Setup:

Equipment Conditions:

- Hub and brakedrum removed (para 4-48).
- Axie hydraulic lines disconnected from backing plate, if removing backing plate (para 4-37)

Tools/Test Equipment:

- General mechanic's tool kit
- Floor jack
- Jackstand

Materials/Parts:

- Dry cleaning solvent (Item *6,* Appendix E)
- Two cotter pins
- Fifteen lockwashers

a. DISASSEMBLY

WARNING

DO NOT handle brakeshoes, brakedrums, or other brake components unless area has been properly cleaned. There may be asbestos dust on these components which can be dangerous if you touch it or breathe It. Wear an approved filter mask and gloves. Never use compressed air or a dry brush to clean brake components. Dust may be removed using an industrial-type vacuum cleaner. Clean dust or mud away from brake components with water and a wet, soft brush or cloth. Failure to follow this warning may result in serious illness or death to personnel.

NOTE

if replacing brakeshoes (10 and 23) only, perform steps 1 through 7.

1. Disconnect handbrake cable (15) from brake lever (11).
2. Remove cotter pin (14), nut (13), flatwasher (12), shoulder bolt (9), and brake lever (11) from brakeshoe (10). Discard cotter pin.
3. Remove cotter pin (16), nut (17), flatwasher (18), shoulder bolt (6), and strut (7) from brakeshoe (23). Discard cotter pin.
4. Remove return spring (8) from brakeshoes (10 and 23).
5. Remove two slotted washers (19) and flatwashers (20) from brakeshoes (10 and 23) and anchor pins (27) .
6. Remove four lockpins (21) and flatwashers (22) from guide pins (2).
7. Remove brakeshoes (10 and 23) from backing plate (3).
8. Remove two flatwashers (24) and flatwashers (25) from anchor pins (27).
9. Remove four flatwashers (5) and springs (4) from guide pins (2).

4-33. SERVICE BRAKE ASSEMBLY MAINTENANCE (M103A1, M105A1, AND M107A1) (Con't).

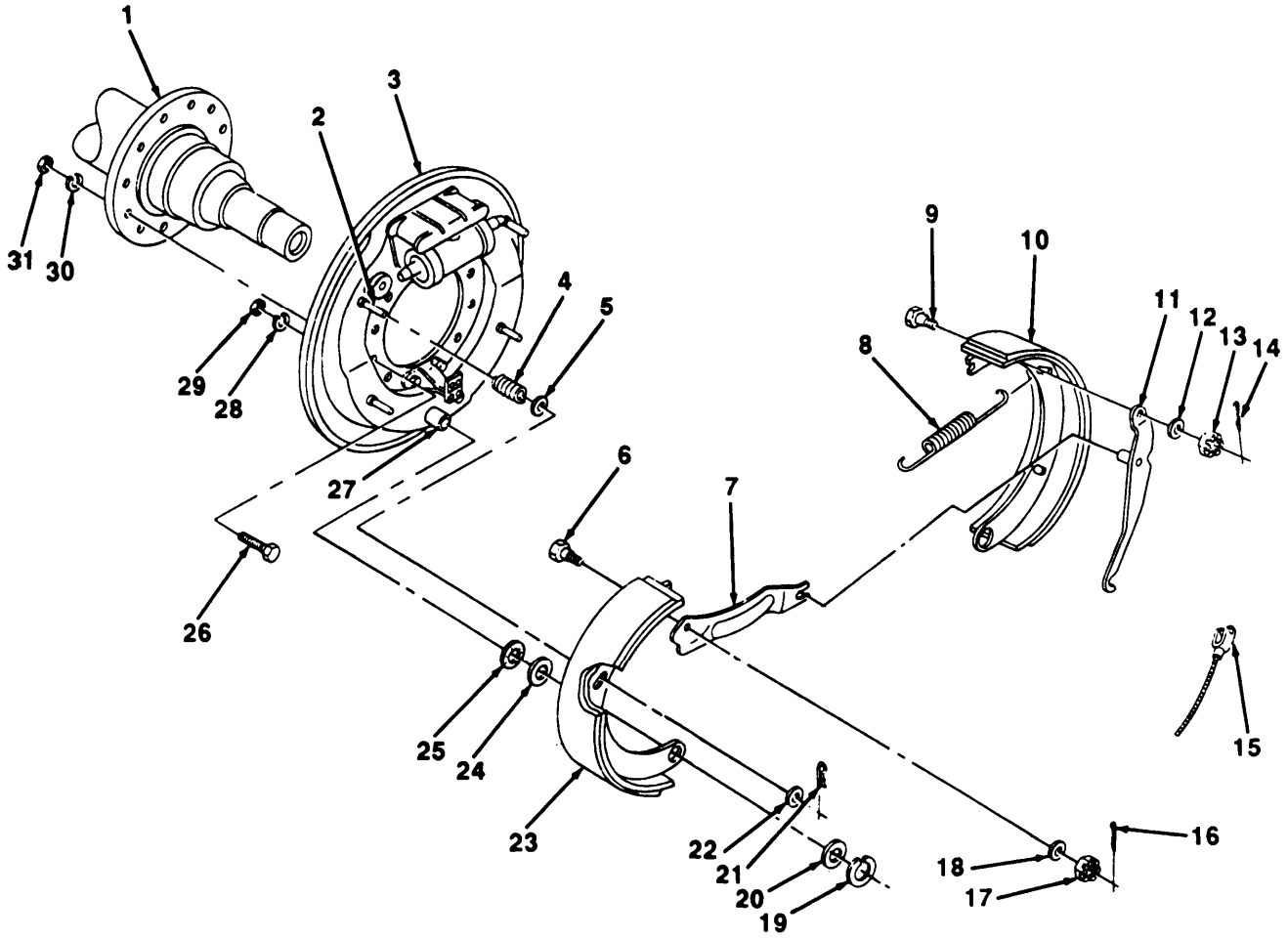

10. Remove two nuts (29), lockwashers (28), and anchor pins (27) from backing plate (3). Discard lockwashers.

11. Remove 12 nuts (31), lockwashers (30), screws (26), and backing plate (3) from axle (1). Discard lockwashers.

TA505273

4-33. SERVICE BRAKE ASSEMBLY MAINTENANCE (M103A1, M105A1, AND M107A1) (Con't).

b . CLEANING AND INSPECTION

WARNING

- **DO NOT handle brakeshoes, brakedrums, or other brake components unless area has been properly cleaned. There may be asbestos dust on these components which can be dangerous if you touch it or breathe It. Wear an approvod filter mask and gloves. Never use compressed air or a dry brush to clean brake components. Dust may be removed using an industrial-type vacuum cleaner. Clean dust or mud away from brake components with water and a wet, soft brush or cloth. Failure to follow this warning may result in serious illness or death.**
- **Dry cleaning solvent P-D-680 is toxic and flammable. Always wear protective goggles and gloves, and use only in a weil-ventilated area. Avoid contact with skin, eyes, and clothes, and DO NOT breathe vapors. DO NOT use near open frame or excessive heat. The solvent's flash point is 100°F-130°F (38°C-59°C). if you become dizzy while using cleaning solvent, immediately get fresh air and medical help. If solvent contacts eyes, immediately wash your eyes and get medical aid.**

1. Clean all parts with dry cleaning solvent. Dry thoroughly.
2. inspect all parts for damage. Replace any damaged parts.
3. Inspect brakeshoe surfaces for cracks, distortion, and excessive wear. Brakeshoe linings should have a minimum thickness of 1/8 in. (3.2 mm). Replace brakeshoes if cracked or if lining thickness is less than 1/8 in. (3.2 mm).

c. ASSEMBLY

NOTE

If replacing brakeshoes (10 and 23) only, perform steps 5 through 12.

1. Position backing plate (3) on axle (1) and install 12 screws (26), new lockwashers (30), and nuts (31).
2. Insert two anchor pins (27) in backing plate (3) and install two new lockwashers (28) and nuts (29).
3. Position four springs (4) and flatwashers (5) on guide pins (2).

4* Position two flatwashers (25) and flatwashers (24) on anchor pins (27).

5. Position two shoulder bolts (6 and 9) and brakeshoes (10 and 23) on backing plate (3).
6. Install four flatwashers (22) and lockpins (21) on guide pins (2).
7. Install two flatwashers (20) and slotted washers (19) on anchor pins (27).
8. Install return spring (8) on brakeshoes (10 and 23).
9. Position strut (7) on brakeshoe (23) and install flatwasher (18), nut (17), and new cotter pin (16).
10. Position brake lever (11) on brakeshoe (10), and aline with strut (7). Install flatwasher (12), nut (13), and new cotter pin (14).

4-33. SERVICE BRAKE ASSEMBLY MAINTENANCE (M103A1, M105A1, AND M107A1) (Con't).

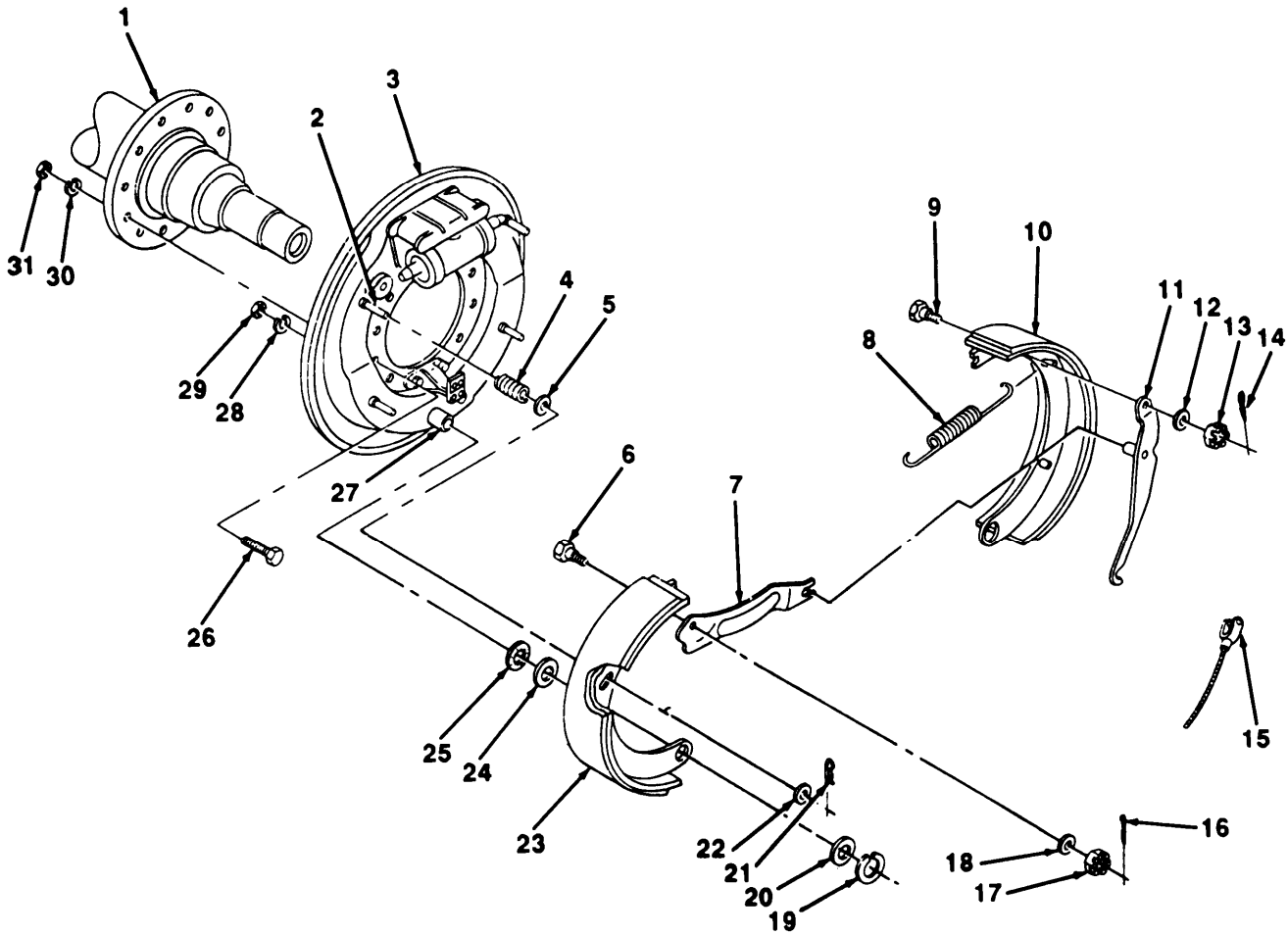

11. Connect handbrake cable (15) to brake lever (11).

12. If disconnected, connect axle hydraulic lines to backing plate (para 4-37).

13. Install hub and brakedrum (para 4-48).

TA505274

4-33. SERVICE BRAKE ASSEMBLY MAINTENANCE (M103A1, M105A1, AND M107A1) (Con't).

d. MAJOR ADJUSTMENT

NOTE

Perform this adjustment at each wheel when now brakeshoes are installed.

1. Remove nut (37), lockwasher (36), and cover (35) from brakedrum (33). Discard lockwasher.
2. Rotate brakedrum (33) until inspection hole (34) is 1½ in. (3.8 cm) from anchor pin (39) and adjacent to rear brakeshoe.
3. Loosen nut (38) on anchor pin (39).
4. Insert a 0.010 in. (.25 mm) feeler gage in inspection hole (34).
5. Adjust brakeshoe by turning anchor pin (39) on backing plate (3) until a slight drag is felt with feeler gage. Remove feeler gage.

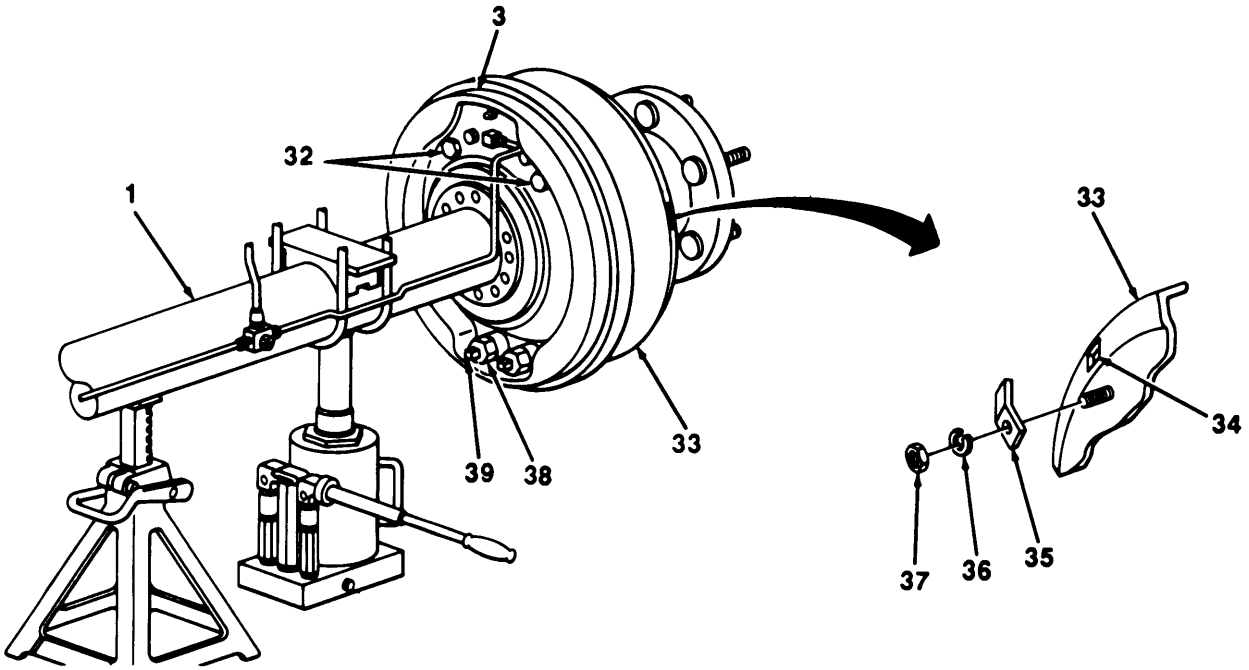

6. Rotate brakedrum (33) until inspection hole (34) is 1½ in. (3.8 cm) from adjusting stud (32) and adjacent to rear brakeshoe.
7. Insert a 0.020 in. (.51 mm) feeler gage in inspection hole (34).
8. Adjust brakeshoe by turning adjusting studs (32) on backing plate (3) until a slight drag is felt with feeler gage. Remove feeler gage,
9. Tighten nut (38) on anchor pin (39).
10. Install cover (35), new lockwasher (36), and nut (37) over inspection hole (34) on brakedrum (33).

TA505275

4-33. SERVICE BRAKE ASSEMBLY MAINTENANCE (M103A1, M105A1, AND M107A1) (Con't).

e. MINOR ADJUSTMENT

NOTE

Perform this adjustment at each wheel to compensate for normal brakeshoe lining wear.

1. Raise axle (1) enough to allow wheel to spin freely. Support axle with suitable jackstand.
2. Adjust brakeshoes by turning two adjusting studs (32) on backing plate (3) until a slight drag is felt when wheel is spun.
3. Back off adjustment until wheel spins freely.
4. Remove jackstand and lower axle (1).

FOLLOW-ON TASKS:

- Bleed brakes, if axle hydraulic lines were disconnected from backing plate (para 4-39).
- Install wheel (para 3-8).

4-34. SERVICE BRAKE ASSEMBLY MAINTENANCE (M103A3, M105A2, M105A2C, M107A2, AND M107A2C).

This Task Covers:

a. Disassembly
b. Cleaning and Inspection
c. Assembly
d. Adjustment

Initial Setup:

Equipment Conditions:

- Hub and brakedrum removed (para 4-49).
- Axle hydraulic lines disconnected from backing plate, if removing backing plate (para 4-37).

Tools/Test Equipment:

- General mechanic's tool kit

Materials/Parts:

- Dry cleaning solvent (Item 6, Appendix E)
- Eighteen lockwashers

a. DISASSEMBLY

WARNING

DO NOT handle brakeshoes, brakedrums, or other brake components unless area has been properly cleaned. There may be asbestos dust on these components which can be dangerous if you touch it or breathe it. Wear an approved filter mask and gloves. Never use compressed air or a dry brush to clean brake components. Dust may be removed using an Industrial-type vacuum cleaner. Clean dust or mud away from brake components with water and a wet, soft brush or cloth. Failure to follow this warning may result In serlous illness or death.

NOTE

If replacing brakeshoes (8 and 18) only, perform steps 1 through 5.

1. Remove two springs (1) from pins (7, 19, 20, and 29).

2. Disconnect handbrake cable (17) from brake lever (5).

3. Remove two slotted washers (2), flatwashers (3), spring washers (4), brake lever (5), and link (6) from pins (7 and 20).

4. Remove screw (30), lockwasher (31), flatwasher (32), sleeve (33), and brakeshoe (8) from backing plate (12). Discard lockwasher.

5. Remove nut (24), lockwasher (23), flatwasher (22), sleeve (21), bolt (14), and brakeshoe (18) from backing plate (12). Discard lockwasher.

6. Remove 12 nuts (15), lockwashers (16), bolts (26), cable ramp (25), two supports (11), and backing plate (12) from axle (13). Discard lockwashers.

7. Remove brake adjusting screw (28) and slack adjusting wheel (27) from each support (11).

8. Remove four nuts (10) and lockwashers (9) from pins (7, 19, 20, and 29). Remove pins from brakeshoes (8 and 18). Discard lockwashers.

4-34. SERVICE BRAKE ASSEMBLY MAINTENANCE (M103A3, M105A2, M105A2C, M107A2, AND M107A2C) (Con't).

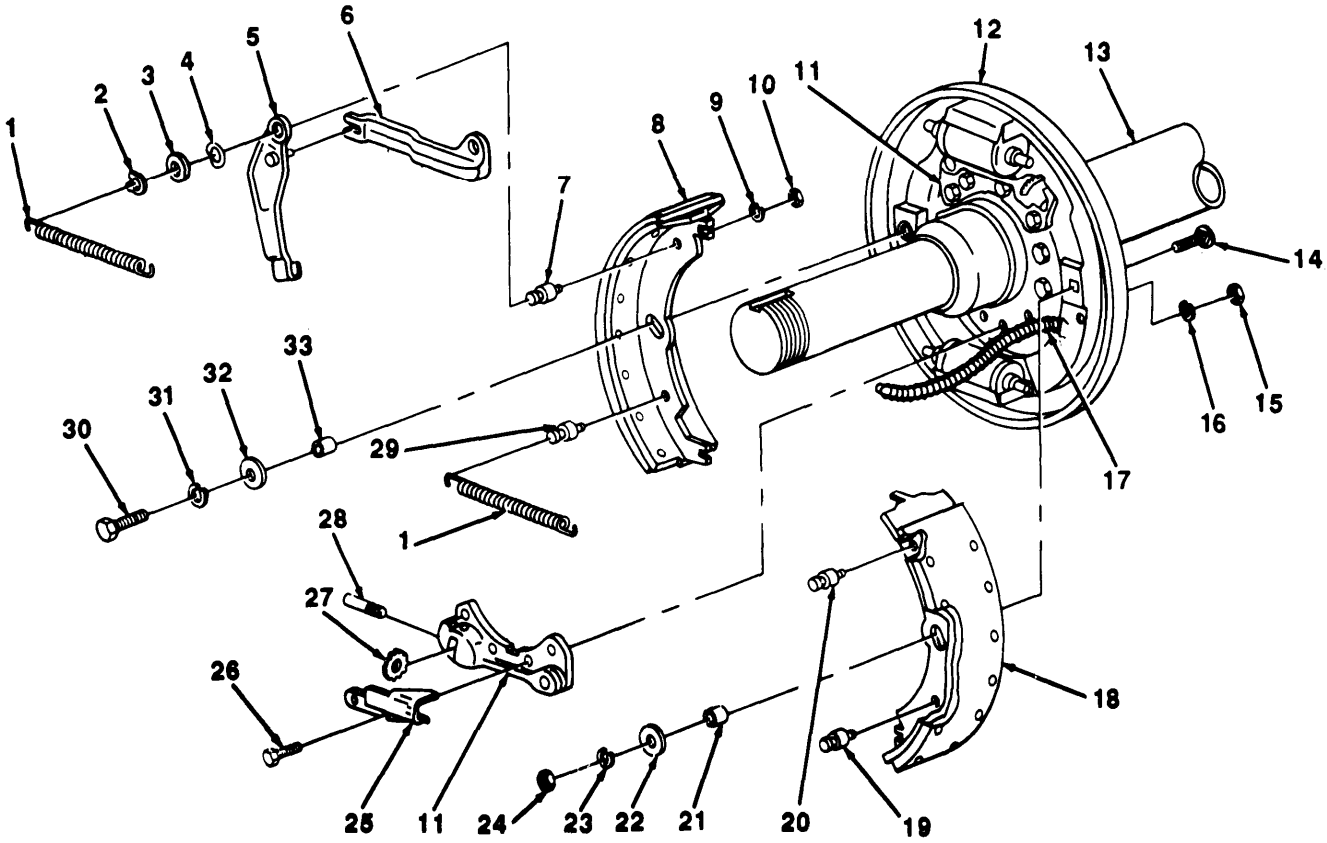

b. CLEANING AND INSPECTION

WARNING

- **DO NOT handle brakeshoes, brakedrums, or other brake components unless area has been properly cleaned, There may be asbestos dust on these components whlch can be dangerous if you touch it or breathe it. Wear an approved filter mask and gloves. Never use compressed air or a dry brush to clean brake components. Dust may be removed uslng an lndustrial-type vacuum cleaner. Clean dust or mud away from brake components with water and a wet, soft brush or cloth. Failure to follow this warning may result in serious illness or death.**
- **Dry cleaning solvent P-D-680 is toxic and flammable. Always wear protectlve goggles and gloves, and use only In a well-ventilated area. Avoid contact with skin, eyes, and clothes, and DO NOT breathe vapors. DO NOT use near open flame or excessive heat. The solvent's flash point is 100°F-130°F (38°C-59°C). If you become dizzy while using cleaning solvent, immediately get fresh air and medical help. If solvent contacts eyes, immediately wash your eyes and get medical aid.**

1. Clean all parts with dry cleaning solvent. Dry thoroughly.
2. inspect all removed components for damage. Replace any damaged parts.

TA505276

4-34. SERVICE BRAKE ASSEMBLY MAINTENANCE (M103A3, M105A2, M105A2C, M107A2, AND M107A2C) (Con't).

3. Inspect brakeshoe linings (34) for cracks. Brakeshoe linings should have a minimum thickness of ⅛ in. (3.2 mm). Replace brakeshoes if cracked or if lining thickness is less than ⅛ in. (3.2 mm).

4. Measure rivets (35) for $^{1}/_{16}$ in. (1.6 mm) depth below brakeshoe lining (34). Replace brakeshoe if depth of rivets is not at least $^{1}/_{16}$ in. (1.6 mm) below brakeshoe lining.

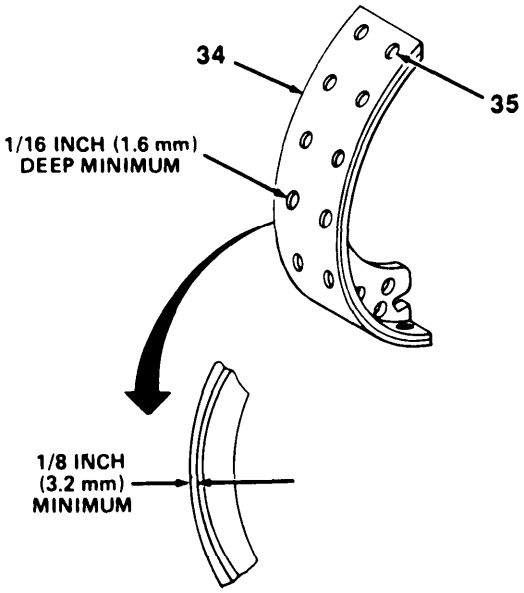

NOTE

If replacing brakeshoes (8 and 18) only, perform steps 4 through 9.

1. Install pins (7, 19, 20, and 29) on brakeshoes (8 and 18) with four new lockwashers (9) and nuts (10).
2. Install slack adjusting wheel (27) and brake adjusting screw (28) on each support (11).
3. Position backing plate (12), two supports (11), and cable ramp (25) on axle (13) and install 12 bolts (26), new lockwashers (16), and nuts (15),
4. Position brakeshoe (18) on backing plate (12) and install bolt (14), sleeve (21), flatwasher (22), new lockwasher (23), and nut (24).
5. Position brakeshoe (8) on backing plate (12) and install sleeve (33), flatwasher (32), new lockwasher (31), and screw (30).
6. Install link (6) on pin (20). install brake lever (5) on pin (7). Pin on brake lever must engage slot in link.
7. install two spring washers (4), flatwashers (3), and slotted washers (2) on pins (7 and 20).
8. Install two springs (1) on pins (7, 19, 20, and 29).
9. Connect handbrake cable (17) to brake lever (5).
10. if disconnected, connect axle hydraulic lines to backing plate (para 4-37).
11. install hub and brakedrum (para 4-49).

TA505277

4-34. SERVICE BRAKE ASSEMBLY MAINTENANCE (M103A3, M105A2, M105A2C, M107A2, AND M107A2C) (Con't).

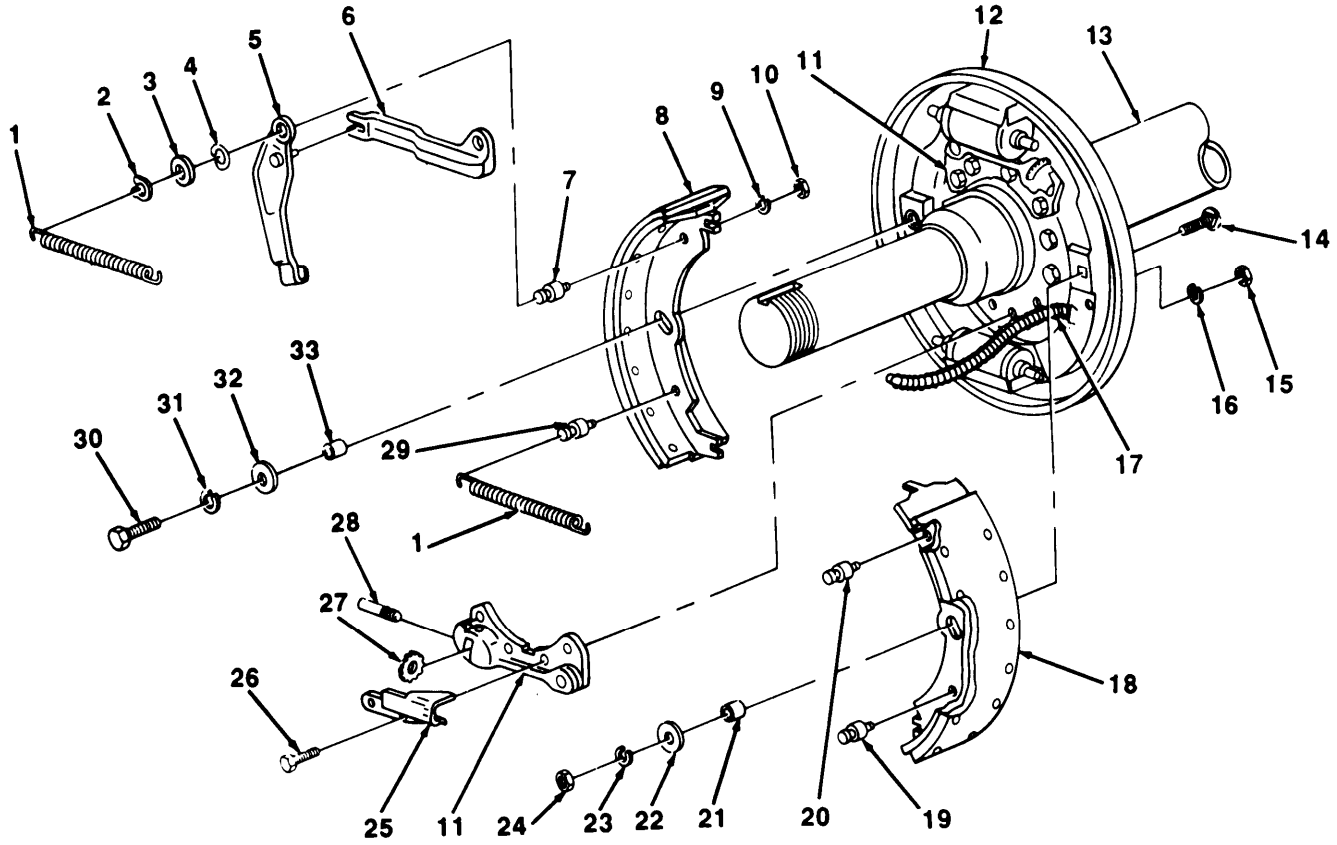

TA505278

4-34. SERVICE BRAKE ASSEMBLY MAINTENANCE (M103A3, M105A2, M105A2C, M107A2, AND M107A2C) (Con't).

d. ADJUSTMENT

NOTE

- **To ensure an accurate adjustment this procedure must be performed when brakeshoe are cool.**
- **Perform this adjustment at each wheel to adjust brakes.**

1. Turn upper brakeshoe adjusting bolt (36) counterclockwise until wheel locks, then back off enough to allow wheel to turn freely,
2. Repeat step 1 for lower brakeshoe adjusting bolt (37) .

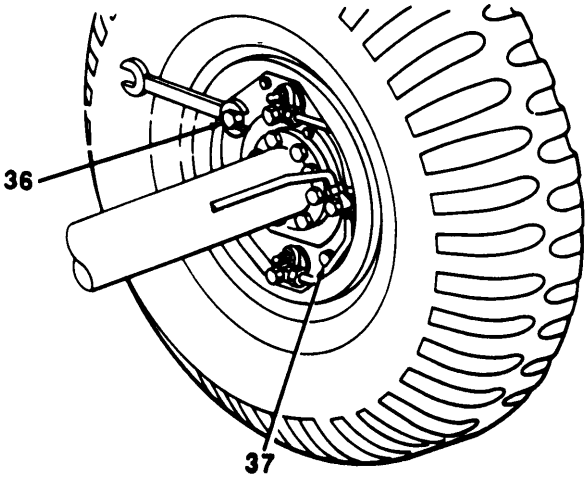

FOLLOW-ON TASKS:

- Bleed brakes, if axle hydraulic lines were disconnected from backing plate (para 4-39),
- Install wheel (para 3-8).
- Adjust handbrake cable (para 4-32).

TA505279

4-35. MASTER CYLINDER REPLACEMENT (ALL EXCEPT M105A2C).

This Task Covers:

a. Removal

b. Installation

Initial Setup:

Materials/Parts:

- Rags (Item 11, Appendix E)
- One gasket
- Six lockwashers

Tools/Test Equipment:

- General mechanic's tool kit
- Drain pan

a. REMOVAL

NOTE

A suitable container should be used to catch any draining brake fluid. Ensure that all spiiis are cleaned up.

1. Remove hose (12) and reducer (11) from master cylinder (15).
2. Remove three nuts (13), lockwashers (14), master cylinder (15), and airbrake chamber (1) from bracket (18). Discard lockwashers.
3. Remove boot (16) from master cylinder (15).
4. Loosen clamp (9) and remove hose (10) from vent tube (8).
5. Remove vent tube (8), filler cap (7), baffle (6), and gasket (5) from master cylinder (15). Discard gasket.
6. If bracket (18) is damaged, remove three nuts (4), lockwashers (3), screws (2), and bracket from crossmember (17). Discard lockwashers.

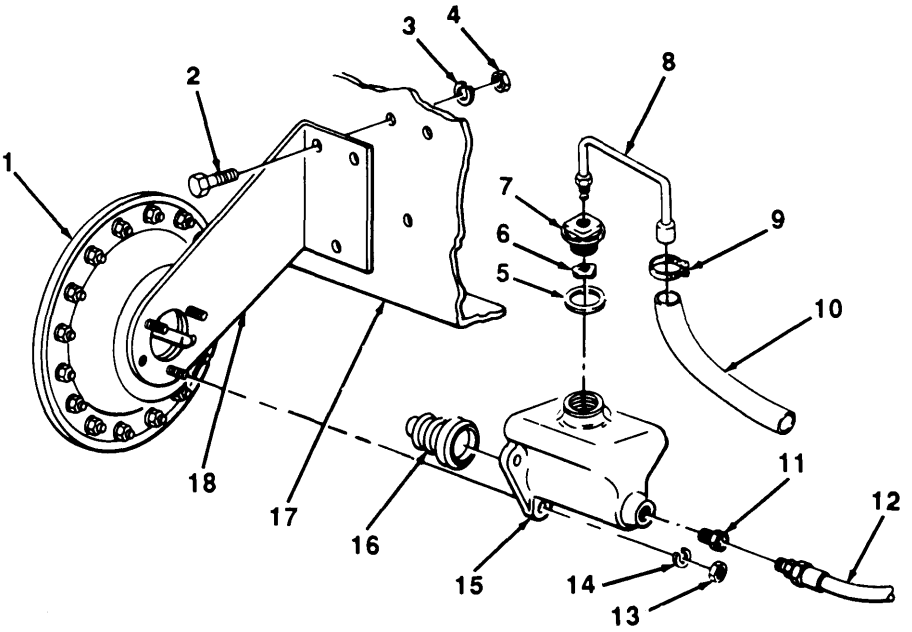

TA505280

4-35. MASTER CYLINDER REPLACEMENT (ALL EXCEPT M105A2C) (Con't).

b. INSTALLATION

1. If removed, install bracket (18) on crossmember (17) with three screws (2), new lockwashers (3), and nuts (4).
2. Install new gasket (5), baffle (6), filler cap (7), and vent tube (8) on master cylinder (15).
3. install hose (10) on vent tube (8) and tighten clamp (9).
4. Install boot (16) on master cylinder (15).
5. Position airbrake chamber (1) and master cylinder (15) on bracket (18) and install three new lockwashers (14) and nuts (13).
6. Install reducer (11) and hose (12) on master cylinder (15).

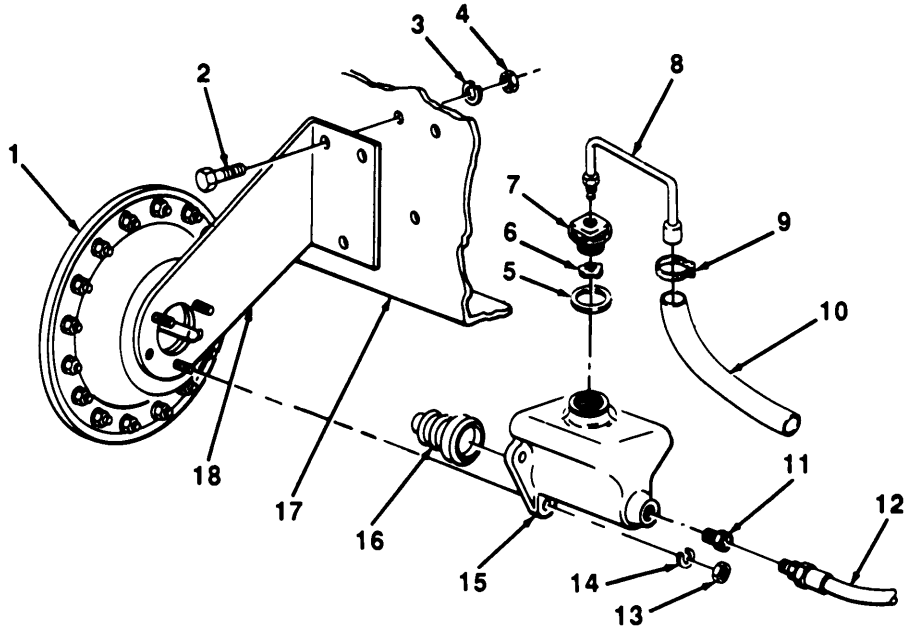

TA505281

FOLLOW-ON TASKS:

- Bleed brakes (para 4-39).

4-36. WHEEL CYLINDER REPLACEMENT (ALL EXCEPT M105A2C).

This Task Covers:

a. Removal

b. Installation

Initial Setup:

Equipment Conditions:

- Service brakes disassembled (para 4-33 or 4-34).
- General mechanic's tool kit
- Drain part

Materials/Parts:

- Rags (Item 11, Appendix E)

a. REMOVAL

NOTE

- Chassis model M103A1 has only one wheel cylinder for each service brake assembly. Chassis model M103A3 has two wheel cylinders for each service brake assembly. This procedure is typical for all models.
- A suitable container should be used to catch any draining brake fluid. Ensure that all spills are cleaned up.

1. Remove bolt (1), flatwasher (2), and spacer (4) from connector (3) and wheel cylinder (5).
2. Remove two screws (8), wheel cylinder (5), and shield (6) from backing plate (7).

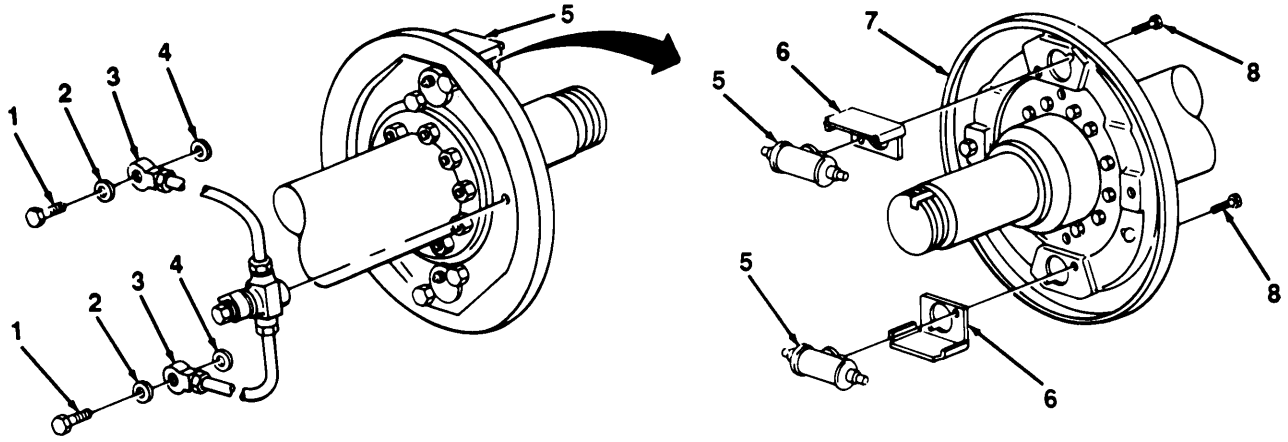

b. INSTALLATION

1. Position shield (6) and wheel cylinder (5) on backing plate (7) and install two screws (8).
2. Install spacer (4), flatwasher (2), and bolt (1) on connector (3) and wheel cylinder (5).

FOLLOW-ON TASKS:

- Assemble service brakes (para 4-33 or 4-34).
- Bleed brakes (para 4-39).

TA505282

4-37. HYDRAULIC LINES, HOSES, AND FITTINGS REPLACEMENT.

This Task Covers:

a. Hose Replacement
b. Axle Lines and Axle Tee Replacement
c. Backing Plate Line Replacement
d. Hydraulic Tank Tube Assembly Replacement (M105A2C)

Initial Setup:

Materials/Parts:

- Rags (item 11, Appendix E)
- One lockwasher
- One connector

Tools/Test Equipment:

- General mechanic's tool kit
- Drain pan

a. HOSE REPLACEMENT

NOTE

A suitable container should be used to catch any draining brake fluid. Ensure that all spills are cleaned up.

1. Remove hose (3) from reducer (2) and connector (7).
2. Install new hose (3) on connector (7) and reducer (2).

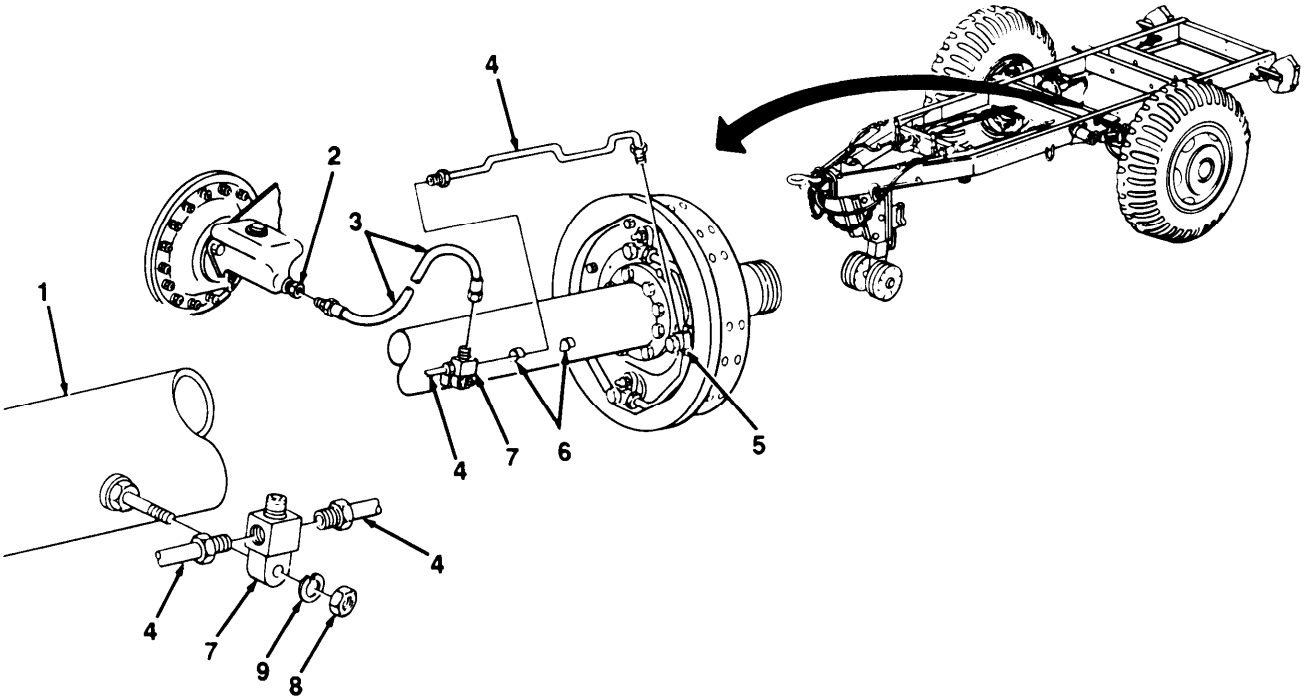

TA505283

4-37. HYDRAULIC LINES, HOSES, AND FITTINGS REPLACEMENT (Con't).

b. AXLE LINES AND AXLE TEE REPLACEMENT

NOTE

- **A suitable container should be used to catch any draining brake fluid. Ensure that all spills are cleaned up.**
- **This procedure covers right and left axle lines (4).**

1. Remove two axle lines (4) from connectors (5 and 7) and axle clips (6).
2. If connected, disconnect hose (3) from connector (7).
3. Remove nut (8), lockwasher (9), and connector (7) from axle (1). Discard lockwasher and connector.
4. Install new connector (7) to axle (1) with new lockwasher (9) and nut (8), Connect hose (3) to connector.

NOTE

Instructions for manufacturing axle lines (4) can be found in Appendix G.

5. Install new axle lines (4) on axle clips (6) and connectors (5 and 7).

c. BACKING PLATE LINE REPLACEMENT

NOTE

- **A suitable contalner should be used to catch any draining brake fluid, Ensure that all spills are cleaned up.**
- **This procedure covers right and left sides of trailer.**

1. Remove backing plate lines (11 and 12) from connectors (10 and 5),
2. Install new backing plate lines (11 and 12) on connectors (10 and 5).

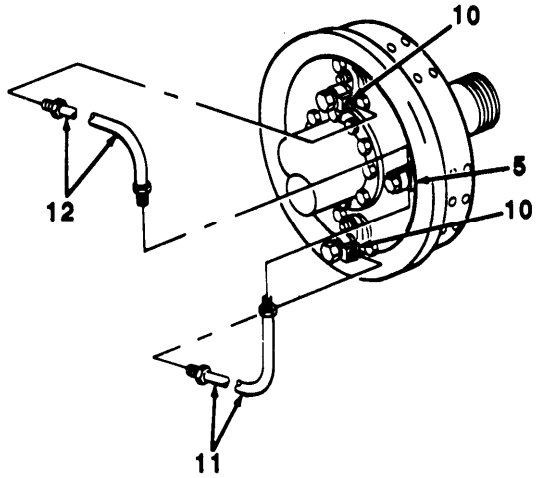

TA505284

4-37. HYDRAULIC LINES, HOSES, AND FITTINGS REPLACEMENT (Con't).

d. HYDRAULIC TANK TUBE ASSEMBLY REPLACEMENT (M105A2C)

NOTE

A suitable container should be used to catch any draining brake fluid. Ensure that ail spills are cleaned up.

1. Remove screw (17) and clamp (16) from tube assembly (14) and framerail (15).
2. Remove tube assembly (14) from master cylinder (18) and hydraulic tank (13).
3. Install new tube assembly (14) on hydraulic tank (13) and master cylinder (18).
4. Secure tube assembly (14) to framerail (15) with clamp (16) and screw (17).

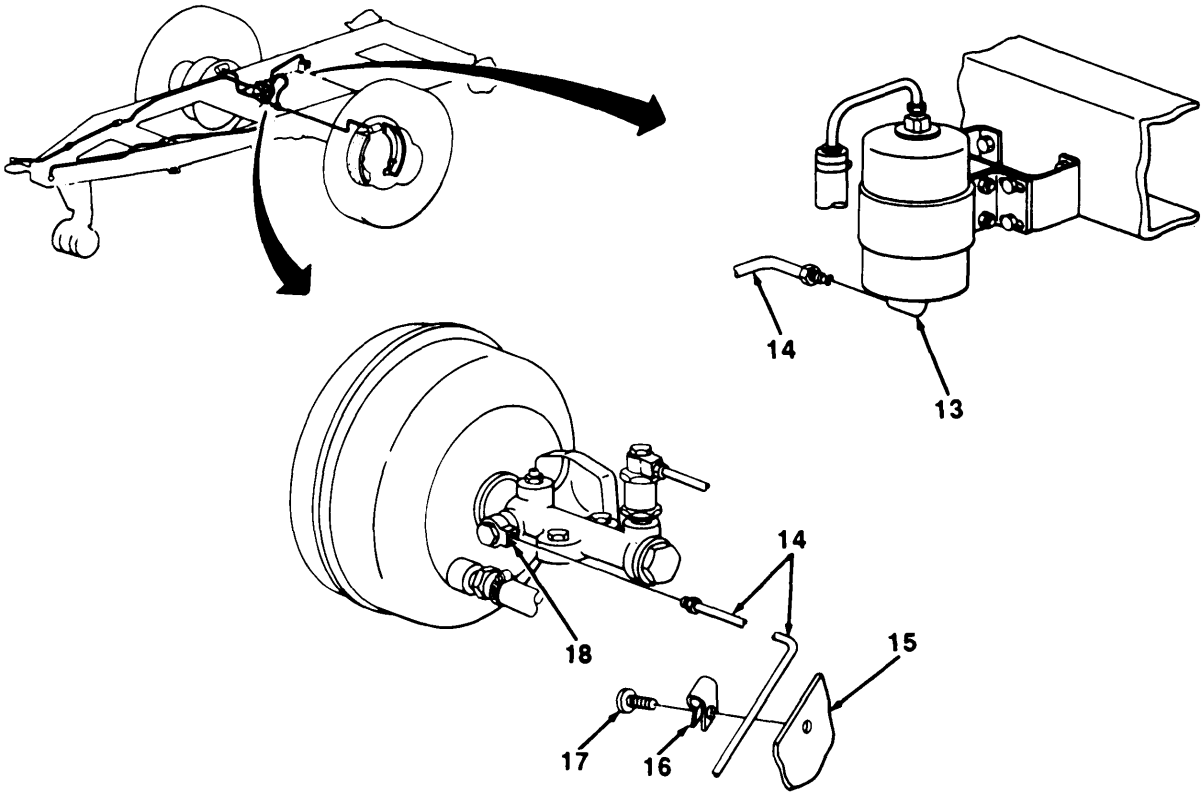

FOLLOW-ON TASKS:

- Bleed brakes (para 4-39).

TA505285

4-38. HYDRAULIC TANK MAINTENANCE (M105A2C).

This Task Covers:

a. Servicing
b. Removal
c. Installation

Initial Setup:

Tools/Test Equipment:

- General mechanic's tool kit
- Drain pan

Materials/Parts:

- Brake fluid (Item 2, Appendix E)
- Rags (Item 11, Appendix E)
- Four lockwashers

a. SERVICING

1. Remove cap (2) from hydraulic tank (3).
2. Add brake fluid, as required, to within ½ in. (13 mm) from top of hydraulic tank (3).
3. Install cap (2) on hydraulic tank (3).

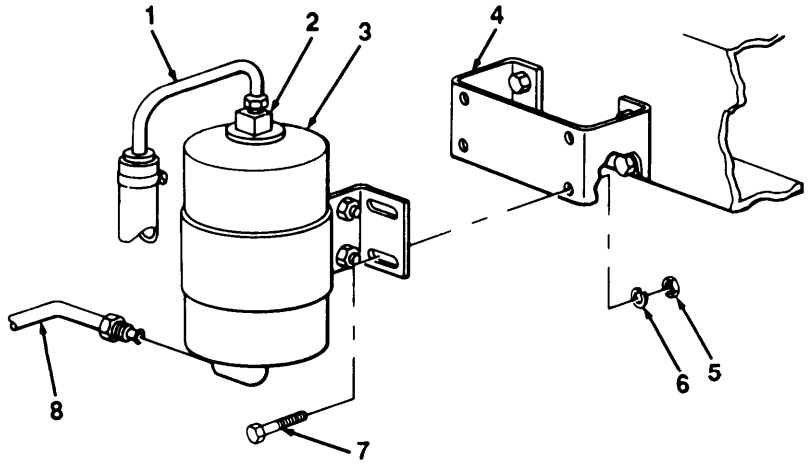

b. REMOVAL

NOTE

A suitable container should be used to catch any draining brake fluid. Ensure that all spills are cleaned up.

1. Disconnect tube assembly (8) from hydraulic tank (3). Disconnect tube assembly (1) from cap (2).
2. Remove four nuts (5), lockwashers (6), screws (7), and hydraulic tank (3) from bracket (4). Discard lockwashers.

TA505286

4-38. HYDRAULIC TANK MAINTENANCE (M105A2C) (Con't).

c. INSTALLATION

1. Install hydraulic tank (3) on bracket (4) with four screws (7), new lockwashers (6), and nuts (5).
2. Connect tube assembly (8) to hydraulic tank (3). Connect tube assembly (1) to cap (2).

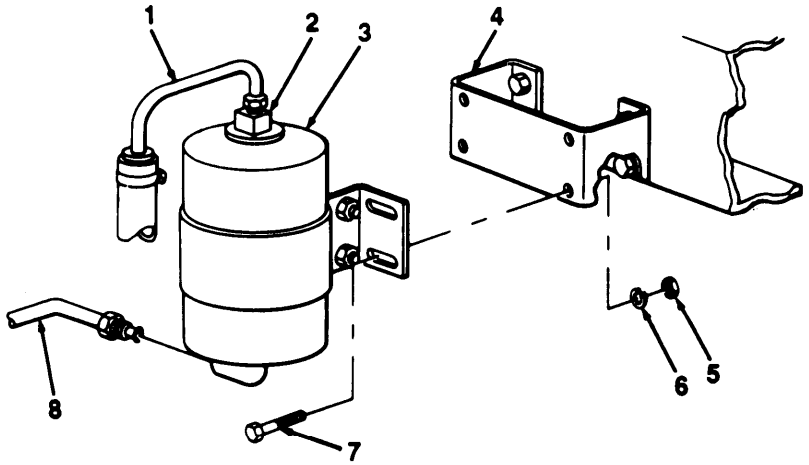

FOLLOW-ON TASKS:

- Bleed brakes (para 4-39).

TA505287

4-39. BLEEDING HYDRAULIC BRAKE SYSTEM.

This Task Covers: Manual Bleeding

Initial Setup:

Equipment Conditions:

- Master cylinder and hydraulic tank serviced (Chapter 3, Section 1)

Tools/Test Equipment:

- General mechanic's tool kit
- Quart container

Materials/Parts:

- Brake fluid (Item 2, Appendix E)
- Plastic tubing

Personnel Required: Two

MANUAL BLEEDING

NOTE

- **Ensure that fluid level in hydraulic tank (if present) and master cylinder (3) is within ½ in. (13 mm) from top at all times during task to avoid allowing air to enter hydraulic system.**
- **Hydraulic brake system manual bleeding is the same for all models except for air/hydraulic. For M103A1 M103A3, M105A1, M107A1, M107A2, and M107A2C begin with step 5.**
- **Plastic tubing (1) should be approximately 18 in. (46 cm) long.**

1. Begin with bleeder valve furthest from master cylinder. Connect plastic tubing (1) to bleeder valve (2) on master cylinder (3).

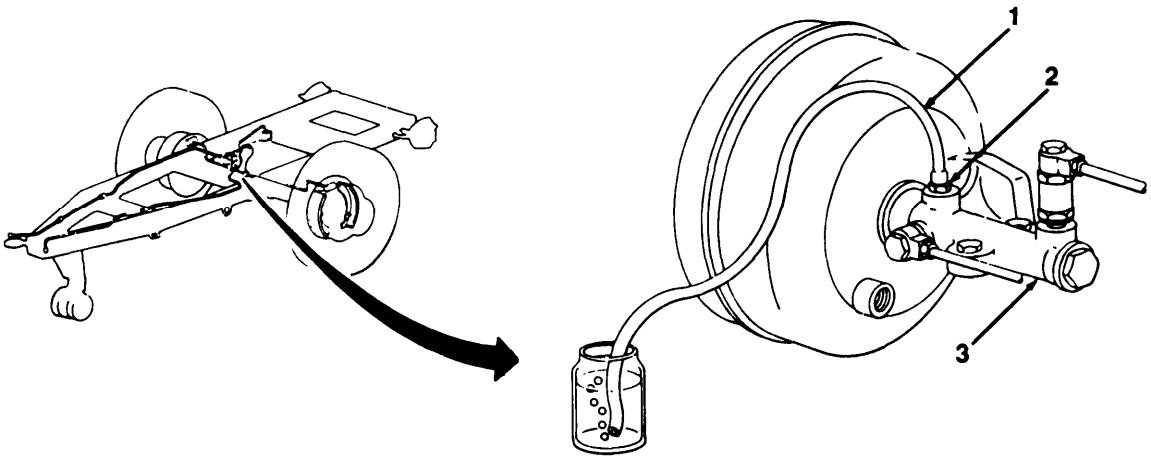

TA506288

4-39. BLEEDING HYDRAULIC BRAKE SYSTEM (Con't).

NOTE

Ensure that end of plastic tubing (1) remains submerged In brake fluid for entlre procedure.

2. Fill container (4) approximately halfway with brake fluid and place free end of plastic tubing (1) in container.

3. Have an assistant pump brake pedal slowly and smoothly. Open bleeder valve (2), allowing brake fluid to flow into container (4).

4. When brake fluid flow contains no air bubbles, close bleeder valve (2) and disconnect plastic tubing (1).

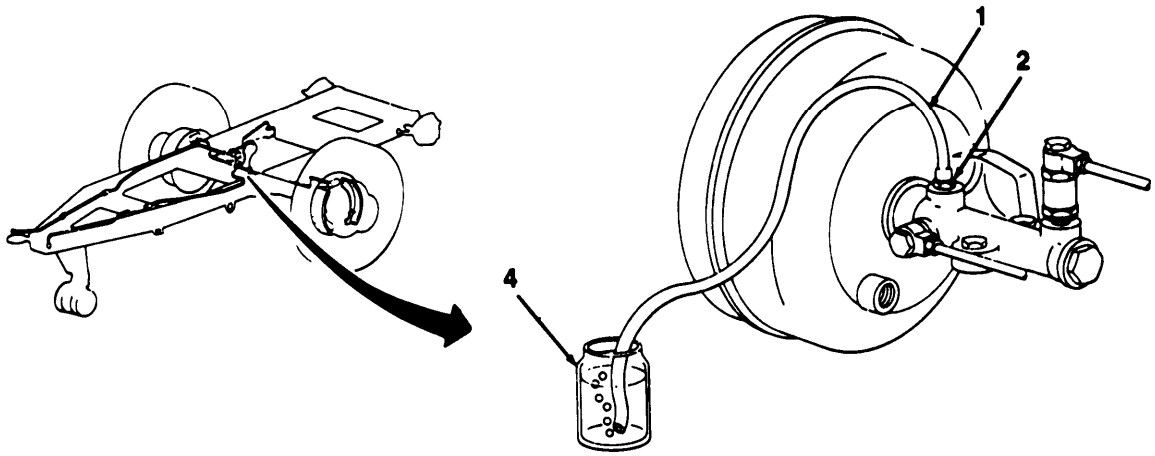

5. Connect plastic tubing (1) to bleeder valve (5) on backing plate (6).

NOTE

Ensure that end of plastic tubing (1) remains submerged In brake fluid for entire procedure.

6. Fill container (4) approximately halfway with brake fluid and place free end of plastic tubing (1) in container.

7. Have an assistant pump brake pedal slowly and smoothly. Open bleeder valve (5), allowing brake fluid to flow into container (4).

8. When brake fluid flow contains no air bubbles, close bleeder valve (5) and disconnect plastic tubing (1).

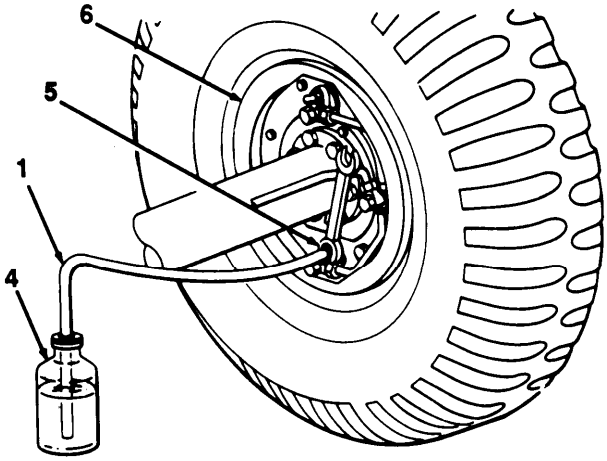

TA505289

4-40. VACUUM CHAMBER AND MASTER CYLINDER REPLACEMENT (M105A2C).

This Task Covers:

a. Removal

b. Installation

Initial Setup:

Materials/Parts:

- Rags (Item 11, Appendix E)
- Eight lockwashers

Tools/Test Equipment:

- General mechanic's tool kit
- Drain pan

a. REMOVAL

1. Remove two clamps (21), vacuum hoses (1), and fittings (22) from cylinder (6).

NOTE

A suitable container should be used to catch any draining brake fluid. Ensure that all spills are cleaned up.

2. Remove bolt (7), flatwasher (8), connector (9), flatwasher (10), valve (11), and flatwasher (12) from cylinder (6).

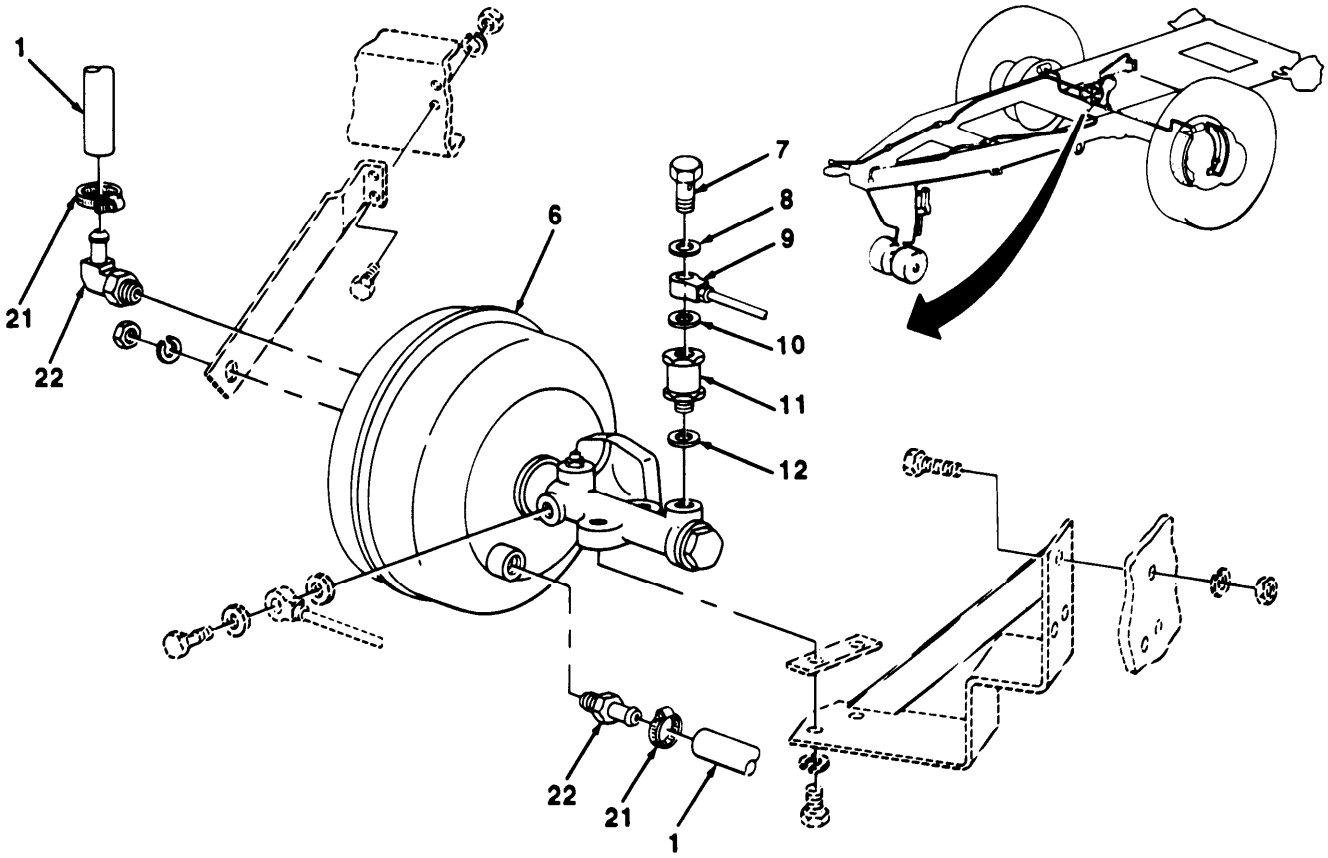

TA505290

4-40. VACUUM CHAMBER AND MASTER CYLINDER REPLACEMENT (M105A2C) (Con't).

3. Remove bolt (23), flatwasher (24), connector (25), and flatwasher (26) from cylinder (6).
4. Remove nut (29) and lockwasher (28) from brace (27) and cylinder (6). Discard lockwasher.
5. Remove two nuts (3), lockwashers (4), screws (5), and brace (27) from crossmember (2). Discard lockwashers.
6. Remove two screws (19), lockwashers (18), cylinder (6), and spacer (20) from mounting bracket (14). Discard lockwashers.
7. Remove three nuts (17), lockwashers (16), screws (13), and mounting bracket (14) from crossmember (15). Discard lockwashers.

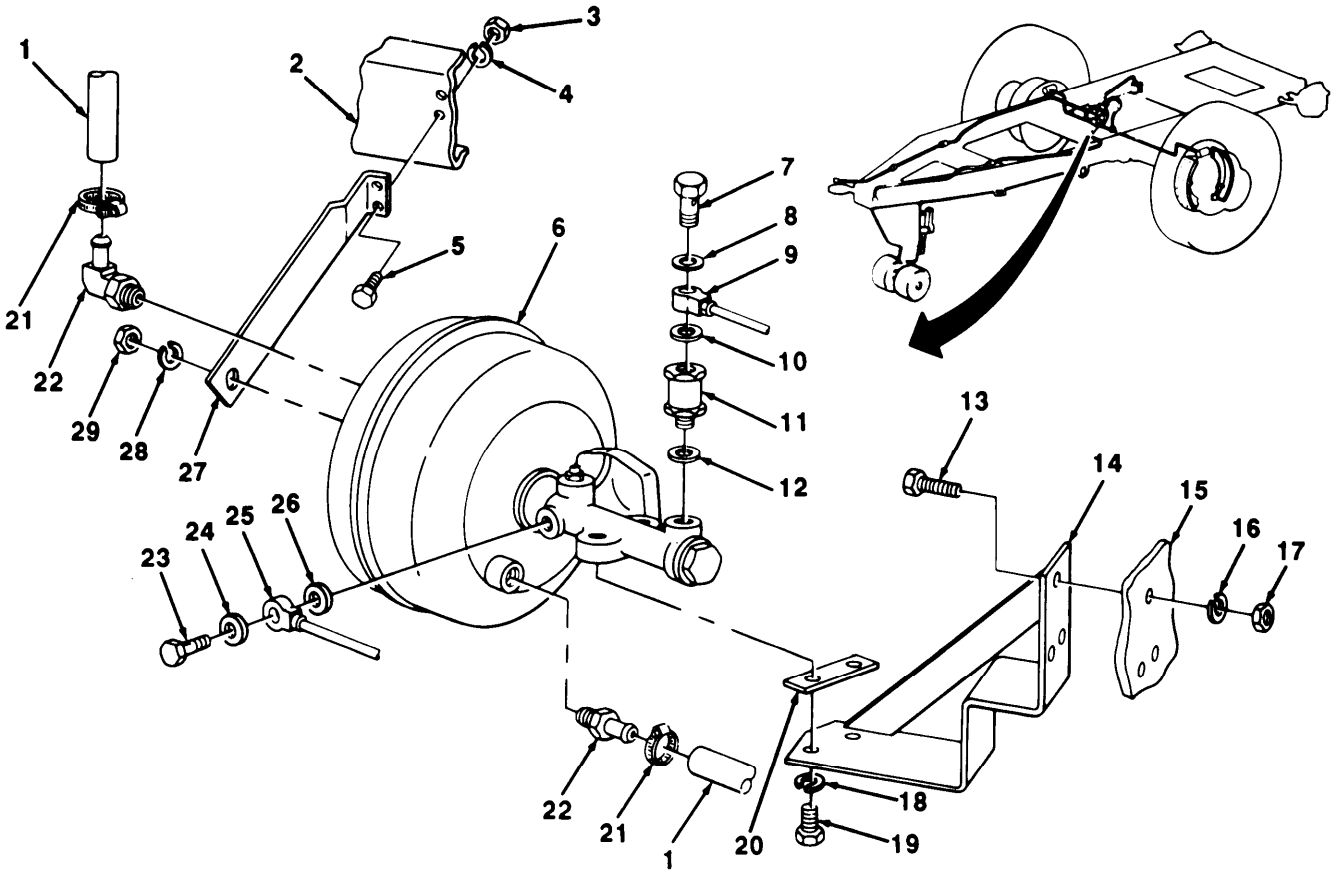

b. INSTALLATION

1. Install mounting bracket (14) on crossmember (15) with three screws (13), new lockwashers (16), and nuts (17).
2. Install spacer (20) and cylinder (6) on mounting bracket (14) with two new lockwashers (18) and screws (19).

TA505291

4-40. VACUUM CHAMBER AND MASTER CYLINDER REPLACEMENT (M105A2C) (Con't).

3. Position brace (27) on crossmember (2) and cylinder (6) and install two screws (5), new lockwashers (4), nuts (3), new lockwasher (28) and nut (29).

4. install flatwasher (26), connector (25), flatwasher (24), and bolt (23) on cylinder (6).

50 Install flatwasher (12) and valve (11) on cylinder (6).

6. Install flatwasher (10), connector (9), flatwasher (8), and bolt (7) on valve (11).

7. Install two fittings (22), vacuum hoses (1), and clamps (21) on cylinder (6).

FOLLOW-ON TASKS:

- Bleed brakes (para 4-39).

4-41. VACUUM QUICK COUPLING REPLACEMENT (M105A2C).

This Task Covers:

a. Removal

b. Installation

Initial Setup:

Tools/Test Equipment:

- General mechanic's tool kit

Materials/Parts:

- Two lockwashers

a. REMOVAL

1. Remove plug and chain (1) from dummy coupling (2).
2. Remove two nuts (5), lockwashers (4), screws (7), and dummy coupling (2) with bracket (3) from crossmember (6). Discard lockwashers.

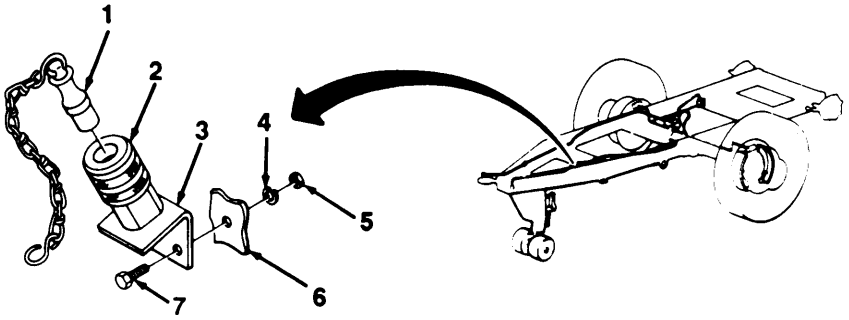

3. Remove two screws (12) and clamps (11) from hose (10) and drawbar (15).
4. Remove two hose clamps (9), vacuum quick coupling (8), hose (10), and spring (14) from adapter (13).

TA505292

4-41. VACUUM QUICK COUPLING REPLACEMENT (M105A2C).

b. INSTALLATION

1. Position spring (14), hose (10), and vacuum quick coupling (8) on adapter (13) and install two hose clamps (9).

2. Position two clamps (11) on hose (10) and drawbar (15) and install two screws (12).

3. Install dummy coupling (2) with bracket (3) on crossmember (6) with two screws (7), new lockwashers (4), and nuts (5),

4. Install plug and chain (1) in dummy coupling (2).

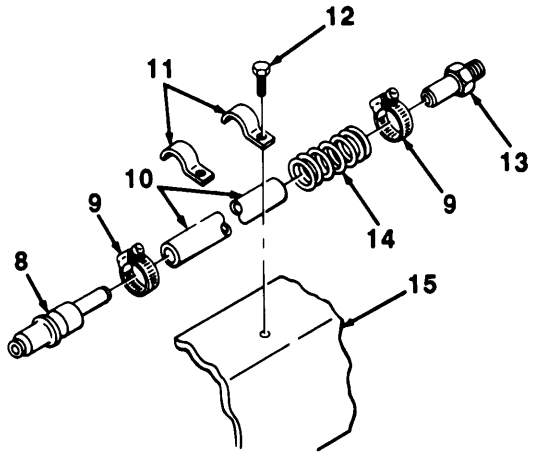

TA505293

4-42. VACUUM LINES, HOSES, AND FITTINGS REPLACEMENT (M105A2C).

This Task Covers:

a. Intervehicular Vacuum Hose Replacement
b. Vacuum Line Replacement
c. Coupling Replacement

Initial Setup:

Equipment Conditions:

- Vacuum quick coupling removed (para 4-41).

Tools/Test Equipment:

- General mechanic's tool kit

a. INTERVEHICULAR VACUUM HOSE REPLACEMENT

NOTE

Right and left side intervehicular vacuum hoses are (11) replaced the same way. This procedure covers one side.

1. Remove two screws (12) and clamps (13) from intervehicular vacuum hose (11) and drawbar (14).
2. Remove intervehicular vacuum hose (11) from coupling (10).

NOTE

Instructions for manufacturing intervehicular vacuum hose (11) are found in Appendix G.

3. Install new intervehicular vacuum hose (11) on coupling (10).
4. Install intervehicular vacuum hose (11) to drawbar (14) with two clamps (13) and screws (12).

b. VACUUM LINE REPLACEMENT

NOTE

Right and left side vacuum lines (2) are replaced the same way except right vacuum line has three clamps (6) and left vacuum line has four clamps.

1. Remove three screws (5) and clamps (6) from vacuum line (2) and framerail (1).
2. Remove vacuum line (2) from coupling (10).
3. Loosen clamp (3) and remove vacuum line (2) from hose (4).

NOTE

Instructions for manufacturing vacuum line (2) are found in Appendix G.

4. Install new vacuum line (2) on hose (4) and tighten clamp (3).
5. install vacuum line (2) on coupling (10).
6. Install vacuum line (2) to framerail (1) with three clamps (6) and screws (5).

4-42. VACUUM LINES, HOSES, AND FITTINGS REPLACEMENT (M105A2C) (Con't).

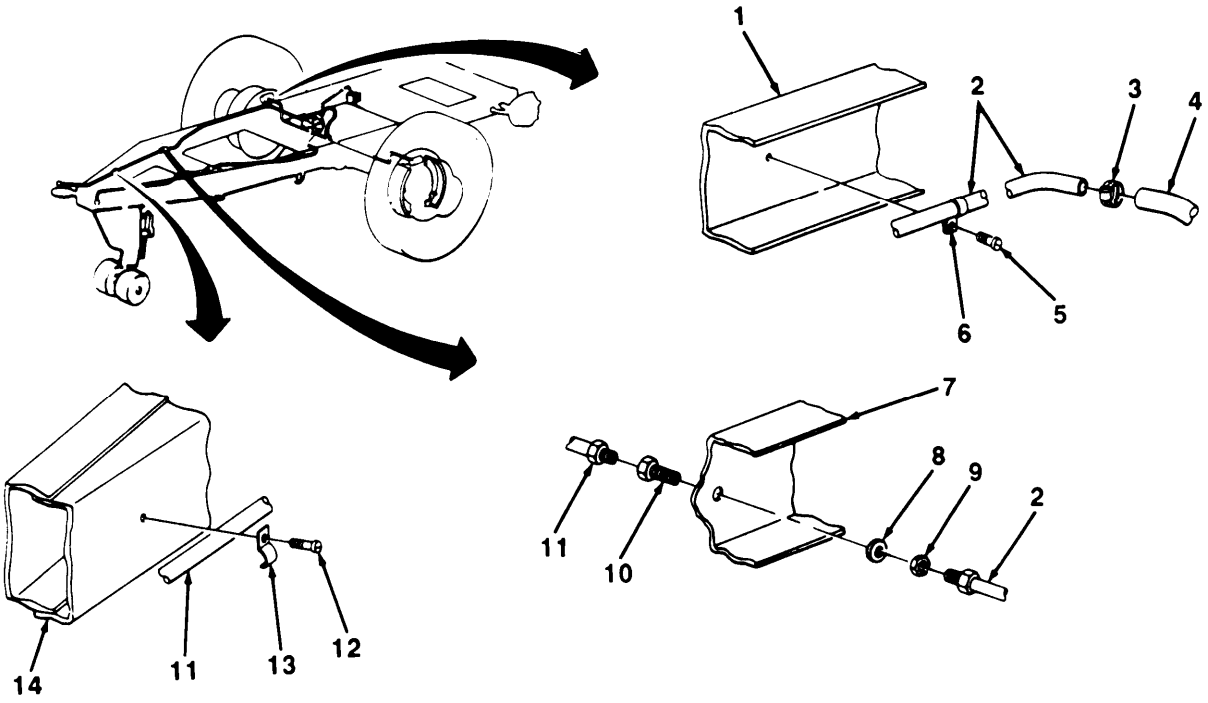

c. COUPLING REPLACEMENT

1. Remove intervehicular vacuum hose (11) and vacuum line (2) from coupling (10).
2. Remove nut (9), flatwasher (8), and coupling (10) from crossmember (7).
3. Install new coupling (10) through crossmember (7) and secure with flatwasher (8) and nut (9).
4. Install intervehicular vacuum hose (11) and vacuum line (2) on coupling (10).

FOLLOW-ON TASKS:

- Install vacuum quick coupling (para 4-41)

TA505294

4-43. AIRBRAKE CHAMBER REPLACEMENT.

This Task Covers:

a. Removal

b. Installation

Initial Setup:

Materials/Parts:

- Three lockwashers

Tools/Test Equipment:

- General mechanic's tool kit

a. REMOVAL

1. Remove tube (2) and adapter (1) from airbrake chamber (7).

CAUTION

Master cylinder (3) must be supported when airbrake chamber (7) is removed. Damage to hydraulic brake line may result if master cylinder is not supported,

2. Remove three nuts (5), lockwashers (4), and airbrake chamber (7) from master cylinder (3) and bracket (6). Discard lockwashers.

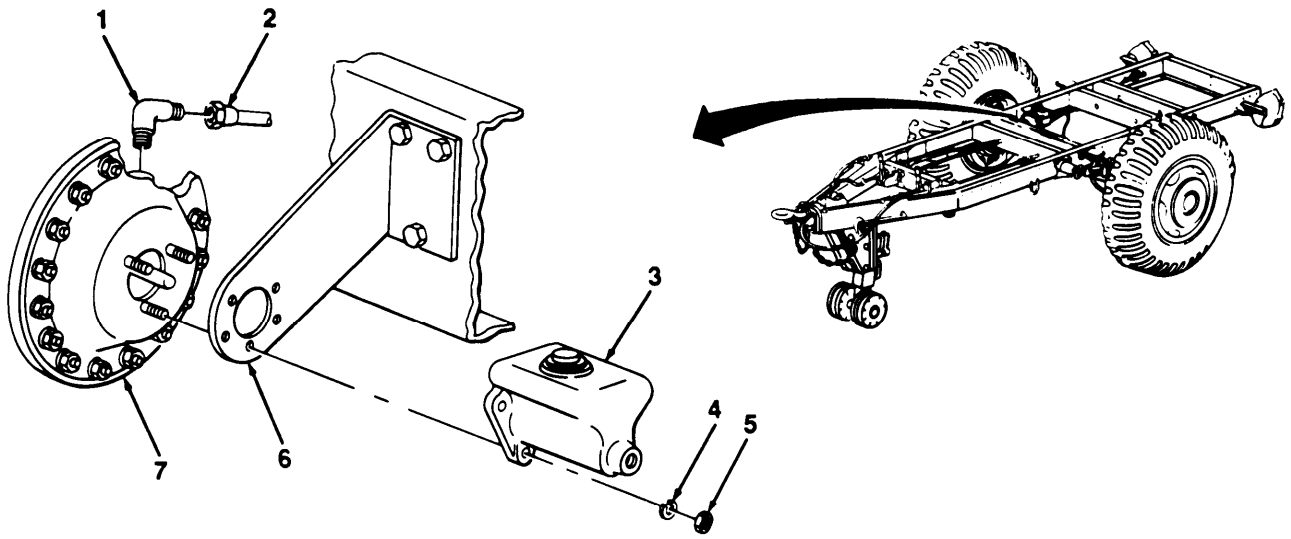

b. Installation

1. Position airbrake chamber (7) on bracket (6). Install airbrake chamber to bracket and master cylinder (3) with three new lockwashers (4) and nuts (5),

2. Install adapter (1) and tube (2) on airbrake chamber (7),

TA505295

4-44. AIR RESERVOIR REPLACEMENT.

This Task Covers:

a. Removal

b. Installation

Initial Setup:

Equipment Conditions:

- Emergency relay valve removed (para 4-47).

Tools/Test Equipment:

- General mechanic's tool kit

Materials/Parts:

- Antiseize tape (Item 17, Appendix E)
- Four lockwashers

a. REMOVAL

1. Remove nipple (4), pipe plug (6), and draincock (5) from air reservoir (7).

2. Remove four nuts (1), lockwashers (2), two U-bolts (3), and air reservoir (7) from mount (8). Discard lockwashers.

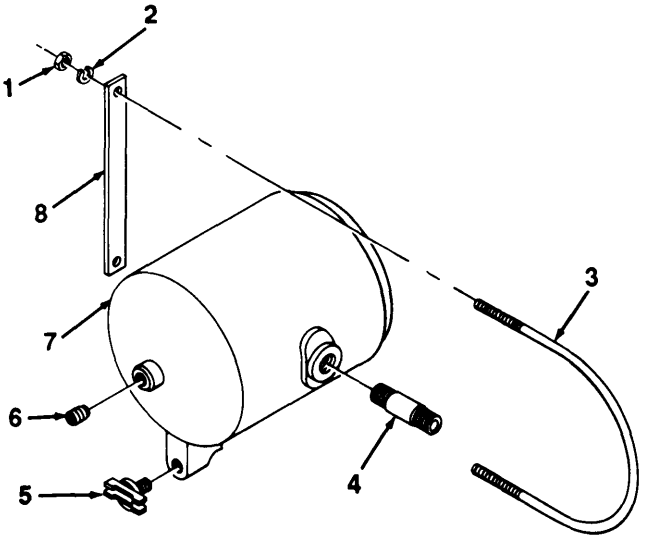

b. INSTALLATION

1. Install air reservoir (7) on mount (8) with two U-bolts (3), four new lockwashers (2), and nuts (1).

2. Apply antiseize tape to draincock (5), pipe plug (6), and nipple (4) and install on air reservoir (7).

FOLLOW-ON TASKS:

- Install emergency relay valve (para 4-47).

TA505296

4-45. AIR FILTER MAINTENANCE.

This Task Covers:

a. Removal
b. Disassembly
c. Cleaning and Inspection
d. Assembly
e. Installation

Initial Setup:

Materials/Parts:

- Dry cleaning solvent (Item 6, Appendix E)
- One filter element
- One gasket
- Two lockwashers

Tools/Test Equipment:

- General mechanic's tool kit

a. REMOVAL

1. Disconnect two tubes (2) from air filter (3).
2. Remove two nuts (4), lockwashers (5), U-bolt (1), and air filter (3) from crossmember (6). Discard lockwashers.

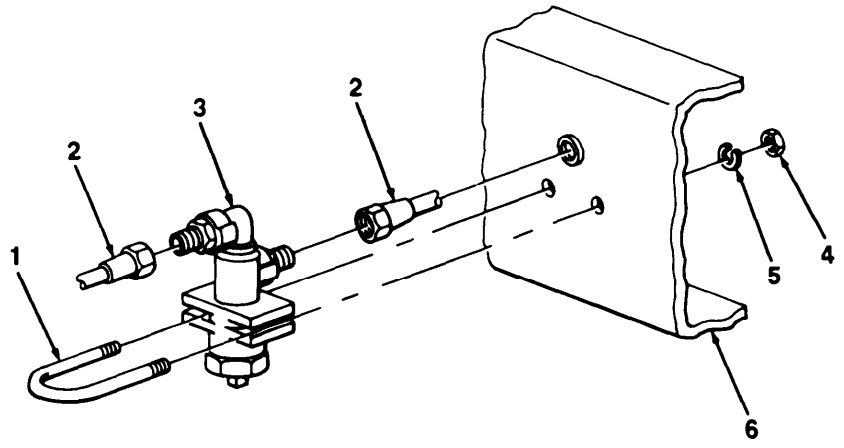

b. DISASSEMBLY

Remove plug (8), adapter (9), gasket (1 O), spring (11), spring washer (12), and filter element (13) from body (7). Discard gasket and filter element.

TA505297

4-45. AIR FILTER MAINTENANCE (Con't).

c. CLEANING AND INSPECTION

WARNING

Dry cleaning solvent P-D-680 is toxic and flammable. Always wear protective goggles and gloves, and use only in a well-ventilated area. Avoid contact with skin, eyes, and clothes, and DO NOT breathe vapors. DO NOT use near open frame or excessive heat. The solvent's flash point is 100°F-130°F (38°C-59°C). if you become dizzy while using cleaning solvent, immediately get fresh air and medical help. If solvent contacts eyes, Immediately wash your eyes and get medical aid.

1. Clean all components with dry cleaning solvent and dry thoroughly.
2. Replace any damaged components.

d. ASSEMBLY

Install new filter element (13), spring washer (12), spring (11), new gasket (10), adapter (9), and plug (8) in body (7).

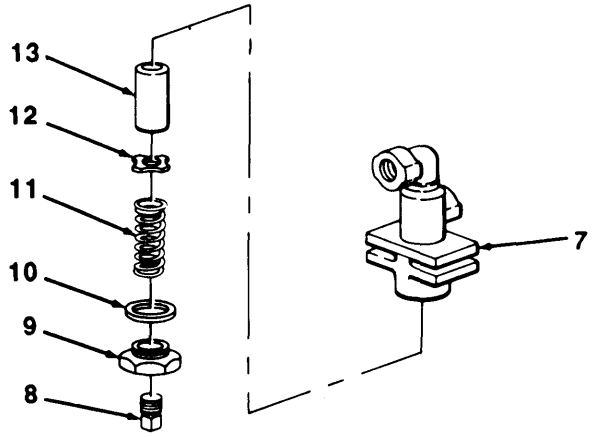

e. INSTALLATION

1. install air filter (3) on crossmember (6) with U-bolt (1), two new lockwashers (5), and nuts (4).
2. Connect two tubes (2) to air filter (3).

TA505298

4-46. AIR COUPLING AND HOSE ASSEMBLY MAINTENANCE.

This Task Covers:

a. Air Coupling Preformed Packing Replacement
b. Hose Assembly Removal
c. Hose Assembly Installation

Initial Setup:

Materials/Parts:

- One preformed packing

Tools/Test Equipment:

- General mechanic's tool kit

a. AIR COUPLING PREFORMED PACKING REPLACEMENT

1. Remove dummy coupling (1) from air coupling (9). Remove preformed packing (10) from air coupling and discard.
2. Install new preformed packing (10) inside air coupling (9). Install dummy coupling (1) on air coupling.

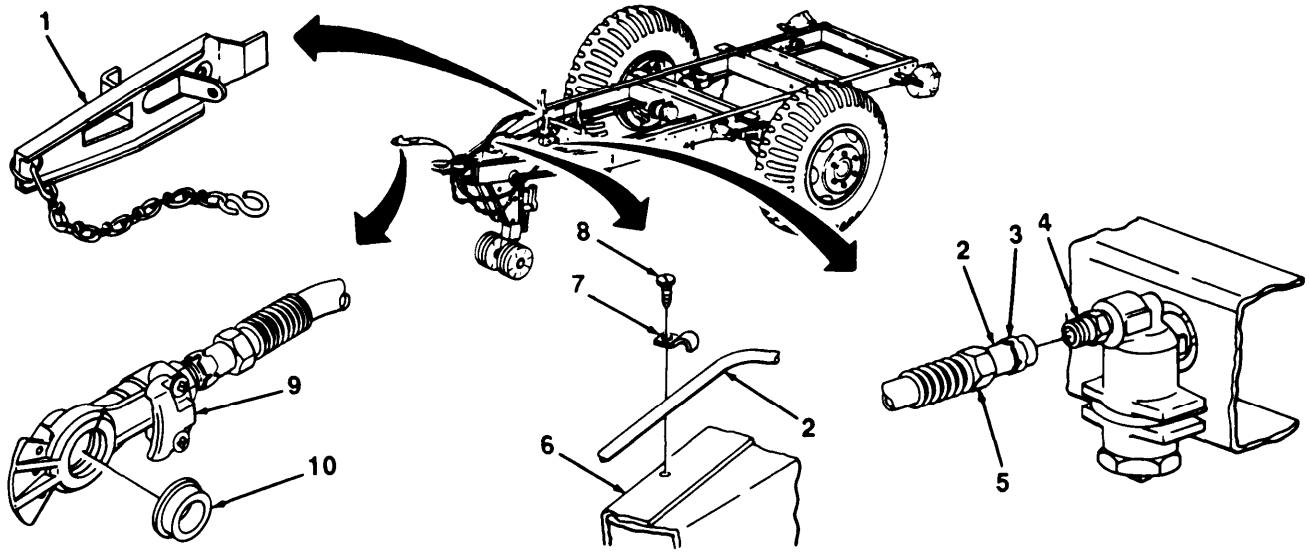

b. HOSE ASSEMBLY REMOVAL

1. Remove two screws (8) and clamps (7) from hose assembly (2) and drawbar (6).
2. Loosen nut (5) and slide back on hose assembly (2).
3. Remove hose assembly (2) and sleeve (3) from straight adapter (4).

c. HOSE ASSEMBLY INSTALLATION

1. Install hose assembly (2) and sleeve (3) on straight adapter (4).
2. Tighten nut (5) on hose assembly (2).
3. Position two clamps (7) on hose assembly (2) and drawbar (6) and install two screws (8).

TA505299

4-47. EMERGENCY RELAY VALVE REPLACEMENT.

This Task Covers:

a. Removal

b. Installation

Initial Setup:

Materials/Parts:

- Marker tags (Item 16, Appendix E)
- Antiseize tape (Item 17, Appendix E)

Tools/Test Equipment:

- General mechanic's tool kit

WARNING

Wear safety goggles to prevent eye injury when opening air reservoir draincock (2). Step away from airstream to prevent injuries.

1. Open draincock (2) on air reservoir (3), and allow all air pressure to release. Close draincock.

NOTE

To ensure proper installation, air lines (5) should be tagged.

2. Remove three air lines (5) and two elbows (6) from emergency relay valve (1).
3. Turn emergency relay valve (1) counterclockwise and remove from nipple (4).

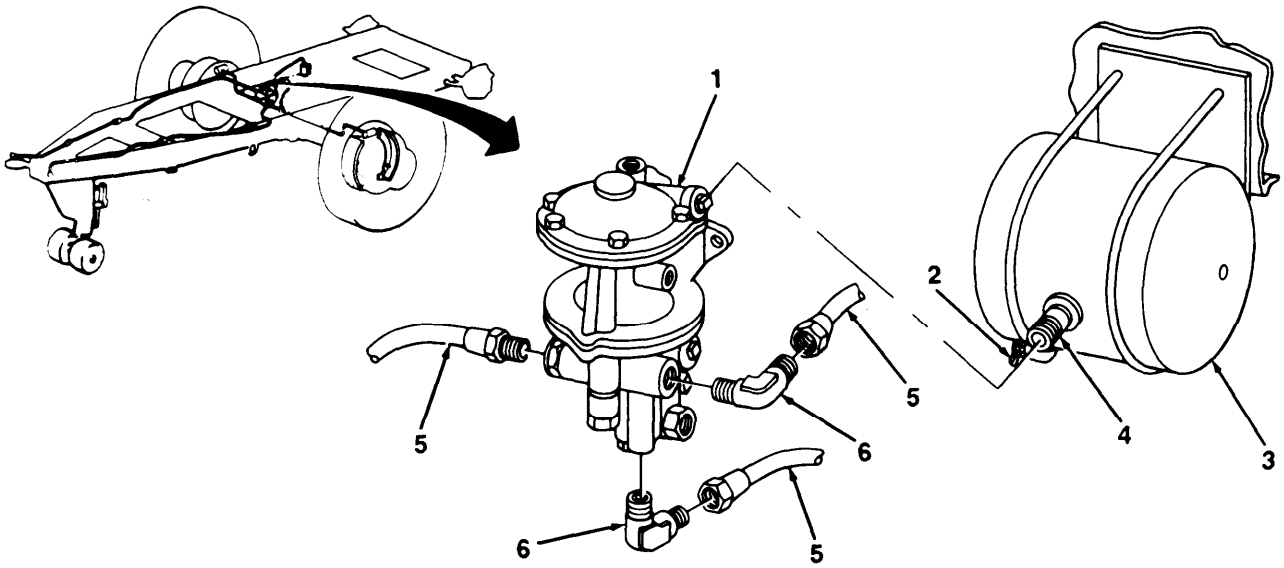

b. INSTALLATION

1. Apply antiseize tape to threads of nipple (4), Turn emergency relay valve (1) clockwise to install on nipple.
2. Apply antiseize tape to threads of two elbows (6). Install elbows and three air lines (5) on emergency relay valve (1).

TA505300

Section VIII, WHEELS, HUBS, AND BRAKEDRUMS MAINTENANCE

Paragraph Title	Page Number
Hub, Wheel Bearing, and Brakedrum Maintenance (M103A1, M105A1, and M107A1)	4-76
Hub, Wheel Bearing, and Brakedrum Maintenance (M103A3, M105A2, M105A2C, M107A2, and M107A2C)	4-81
Tire and Tube Maintenance	4-85

4-48. HUB, WHEEL BEARING, AND BRAKEDRUM MAINTENANCE (M103A1 , M105A1 , AND M107A1).

This Task Covers:

a. Removal
b. Disassembly
c. Assembly
d. Installation
e. Wheel Bearing Adjustment

Initial Setup:

Equipment Conditions:

- Wheel removed (para 3-8).

Tools/Test Equipment:

- General mechanic's tool kit
- Floor jack
- Jackstand
- Wheel bearing socket, ¾ in. drive, 3 in.

Materials/Parts:

- Dry cleaning solvent (item 6, Appendix E)
- Grease (item 7, Appendix E)
- One gasket
- One oil seal
- Sixteen lockwashers

References:

- TM 9-214

a. REMOVAL

1. Position jackstand under axle (9) and remove floor jack.

2. Remove eight screws (1), lockwashers (2), hubcap (3), and gasket (4) from hub (13). Discard lockwashers and gasket.

3. Remove outer adjusting nut (5), keyed washer (6), and inner adjusting nut (7) from hub (13) and axle (9).

4. Pull hub (13) out slightly on axle (9) to loosen outer wheel bearing cone (8). Remove outer wheel bearing cone from hub and axle.

4-48. HUB, WHEEL BEARING, AND BRAKEDRUM MAINTENANCE (M103A1, M105A1, AND M107A1) (Con't).

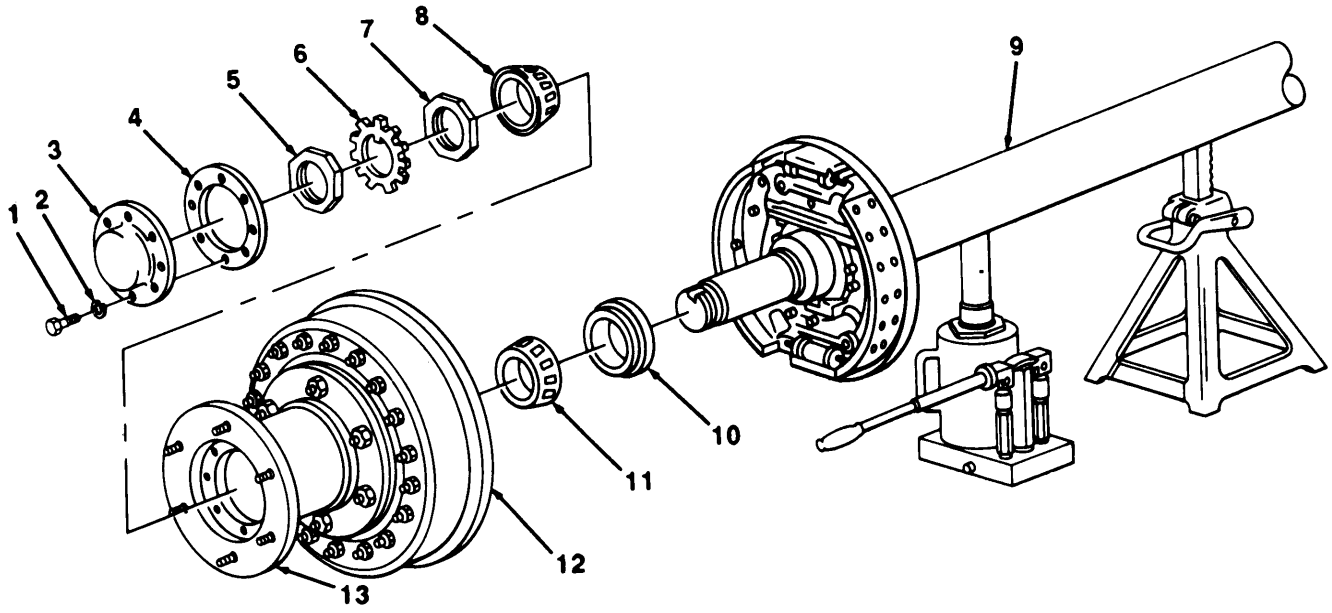

WARNING

DO NOT handle brakeshoes, brakedrums, or other brake components unless area has been properly cleaned. There may be asbestos dust on these components which can be dangerous if you touch it or breathe it. Wear an approved filter mask and gloves. Never use compressed air or a dry brush to clean brake components. Dust may be removed using an industrial-type vacuum cleaner. Clean dust or mud away from brake components with water and a wet, soft brush or cloth. Failure to follow this warning may result in serious illness or death.

5. Remove hub (13) and brakedrum (12) from axle (9).

6. Tap inner wheel bearing cone (11) and oil seal (10) out of hub (13). Discard oil seal.

TA505301

4-48. HUB, WHEEL BEARING, AND BRAKEDRUM MAINTENANCE (M103A1, M105A1, AND M107A1) (Con't).

WARNING

Dry cleaning solvent P-D-680 is toxic and flammable. Always wear protective goggles and gloves, and use only in a well-ventilated area. Avoid contact with skin, eyes, and clothes, and DO NOT breathe vapors. DO NOT use near open flame or excessive heat. The solvent's flash point is 100°F-130°F (38°C-59°C). If you become dizzy while using cleaning solvent, immediately get fresh air and medical help. If solvent contacts eyes, immediately wash your eyes and get medical aid.

NOTE

If outer and inner wheel bearing cones (8 and 11) need replacing, bearing cups (14) must also be replaced (subpara b).

7. Clean and inspect outer and inner wheel bearing cones (8 and 11) in accordance with TM 9-214. Discard if damaged.

b. DISASSEMBLY

WARNING

DO NOT handle brakeshoes, brakedrums, or other brake components unless area has been properly cleaned, There may be asbestos dust on these components which can be dangerous if you touch it or breathe it. Wear an approved filter mask and gloves. Never use compressed air or a dry brush to clean brake components. Dust may be removed using an industrial-type vacuum cleaner. Clean dust or mud away from brake components with water and a wet, soft brush or cloth. Failure to follow this warning may result in serious illness or death.

1. Remove eight screws (20) and lockwashers (21). Remove adapter (22) and brakedrum (12) assembly from hub (13). Discard lockwashers.
2. Remove ten nuts (15), flatwashers (16), inspection cover (17), screws (18), adapter (22), and deflector (19) from brakedrum (12).

NOTE

Perform step 3 only if bearing cups (14) are being replaced, Bearing cups should always be replaced when outer and inner wheel bearing cones (8 and 11) are replaced.

3. Remove two bearing cups (14) from hub (13).
4. If damaged, remove six wheel bolts (23) from hub (13).

c. ASSEMBLY

1. If removed, install six wheel bolts (23) in hub (13).
2. If removed, tap two bearing cups (14) into position in hub (13).
3. Position deflector (19) and adapter (22) on brakedrum (12) and install ten screws (18), inspection cover (17), ten flatwashers (16), and nuts (15).
4. Position adapter (22) and brakedrum (12) assembly on hub (13) and install eight new lockwashers (21) and screws (20).

4-48. HUB, WHEEL BEARING, AND BRAKEDRUM MAINTENANCE (M103A1, M105A1, AND M107A1) (Con't).

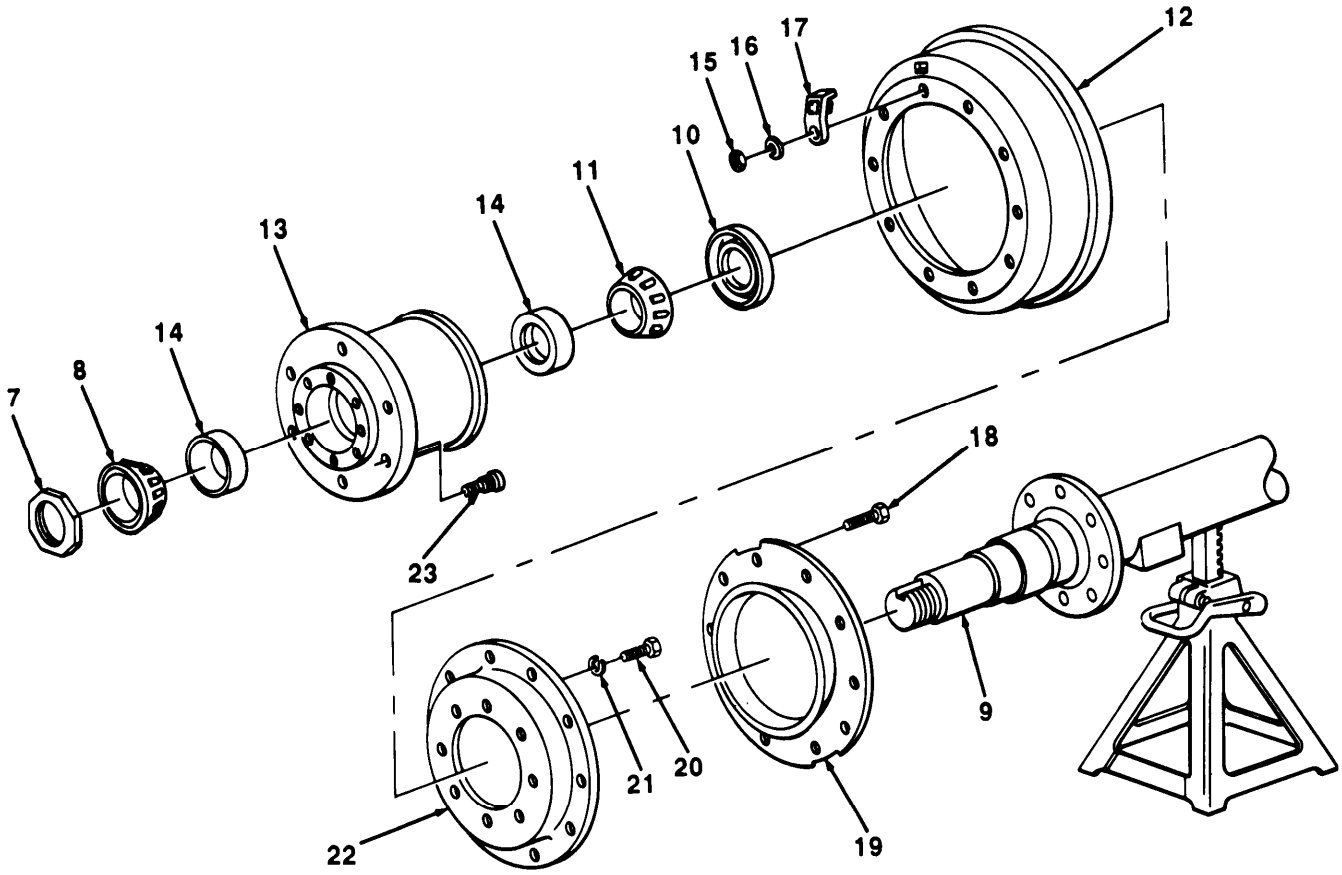

NOTE

Instructions on packing outer and inner wheel bearing cones (8 and 11) can be found in TM 9-214.

5. Pack inner wheel bearing cone (11) with grease, position in hub (13), and install new oil seal (10).

d. INSTALLATION

1. Position brakedrum (12) and hub (13) on axle (9).
2. Pack outer wheel bearing cone (8) with grease. Position outer wheel bearing cone on hub (13) and axle (9), and install inner adjusting nut (7).

e. WHEEL BEARING ADJUSTMENT

1. Tighten inner adjusting nut (7) while turning hub (13) and brakedrum (12) until drag is felt.
2. Rotate hub (13) and brakedrum (12) one full turn and loosen inner adjusting nut (7) while rocking hub back and forth until looseness is felt.
3. Tighten inner adjusting nut (7) until looseness is no longer felt.

TA505302

4-48. HUB, WHEEL BEARING, AND BRAKEDRUM MAINTENANCE (M103A1, M105A1, AND M107A1) (Con't).

4. Install keyed washer (6) and outer adjusting nut (5) on axle (9). Bend one tab of keyed washer over flat of outer adjusting nut.

5. Install new gasket (4) and hubcap (3) on hub (13) with eight new lockwashers (2) and screws (1).

6. Position floor jack under axle (9) and raise enough to remove jackstand.

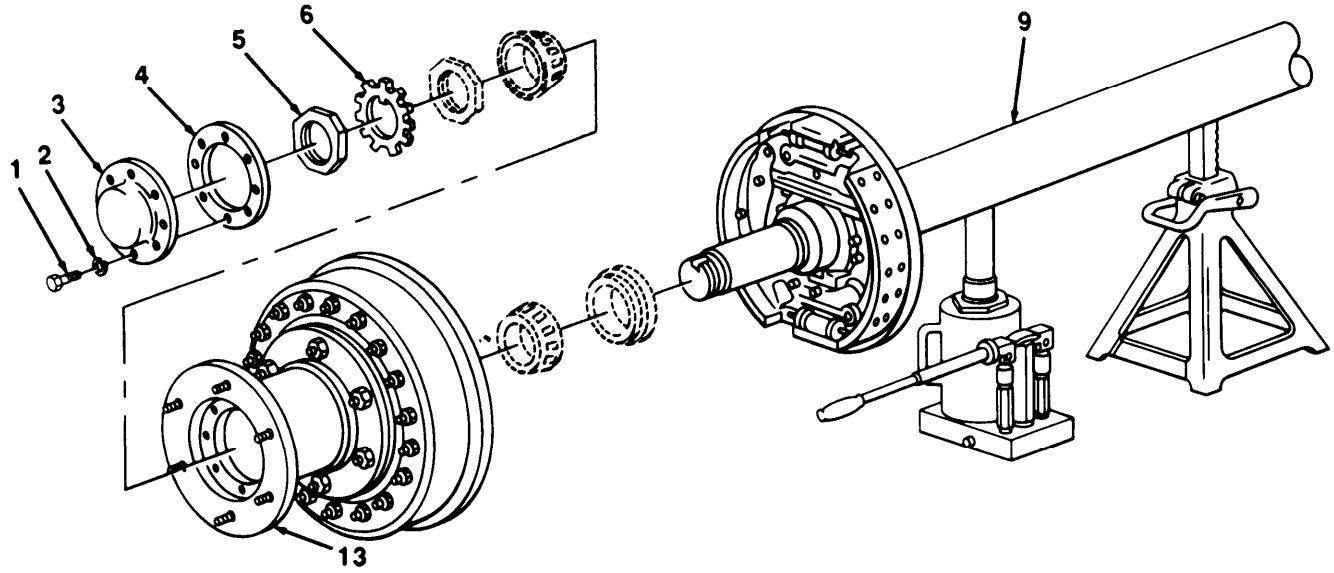

FOLLOW-ON TASKS:

- Adjust brakes (para 4-33).
- install wheel (para 3-8).

TA505303

4-49. HUB, WHEEL BEARING, AND BRAKEDRUM MAINTENANCE (M103A3, M105A2, M105A2C, M107A2, AND M107A2C).

This Task Covers:

a. Removal
b. Disassembly
c. Assembly
d. Installation
e. Wheel Bearing Adjustment

Initial Setup:

Equipment Conditions:

- Wheel removed (para 3-8).

Tools/Test Equipment:

- General mechanic's tool kit
- Floor jack
- Jackstand
- Socket, wheel bearing, ¾ in. drive, 3⅜ in.

Materials/Parts:

- Dry cleaning solvent (item 6, Appendix E)
- Grease (item 7, Appendix E)
- One gasket
- One oil seal
- Three lockwashers

References:

- TM 9-214

4-49. HUB, WHEEL BEARING, AND BRAKEDRUM MAINTENANCE (M103A3, M105A2, M105A2C, M107A2, AND M107A2C) (Con't).

a. REMOVAL

1. Position jackstand under axle (16) and remove floor jack,

2. Remove three screws (1), lockwashers (2), hubcap (3), and gasket (4) from hub (10). Discard lockwashers and gasket,

3. Remove outer adjusting nut (5), keyed washer (6), and inner adjusting nut (7) from hub (10) and axle (16).

4. Pull hub (10) out slightly on axle (16) to loosen outer wheel bearing cone (8). Remove outer wheel bearing cone from hub and axle.

WARNING

DO NOT handle brakeshoes, brakedrums, or other brake components unless area has been properly cleaned. There may be asbestos dust on these components which can be dangerous if you touch it or breathe it. Wear an approved filter mask and gloves. Never use compressed air or a dry brush to clean brake components. Dust may be removed using an industrial-type vacuum cleaner. Clean dust or mud away from brake components with water and a wet, soft brush or cloth. Failure to follow this warning may result in serious illness or death.

5. Remove hub (10) and brakedrum (12) from axle (16).

6. Tap inner wheel bearing cone (21), oil seal (20), and spacer sleeve (17) out of hub (10) or axle (16). Discard oil seal.

WARNING

Dry cleaning solvent P-D-680 is toxic and flammable. Always wear protective goggles and gloves, and use only in a well-ventilated area. Avoid contact with skin, eyes, and clothes, and DO NOT breathe vapors. DO NOT use near open flame or excessive heat. The solvent's flash point is 100°F-130°F (38°C-59°C). If you become dizzy while using cleaning solvent, immediately get fresh air and medical help. If solvent contacts eyes, immediately wash your eyes and get medical aid.

NOTE

If outer and inner wheel bearing cones (8 and 21) need replacing, bearing cups (9) must also be replaced (subpara b).

7. Clean and inspect outer and inner wheel bearing cones (8 and 21) in accordance with TM 9-214. Discard if damaged.

4-49. HUB, WHEEL BEARING, AND BRAKEDRUM MAINTENANCE (M103A3, M105A2, M105A2C, M107A2, AND M107A2C) (Con't).

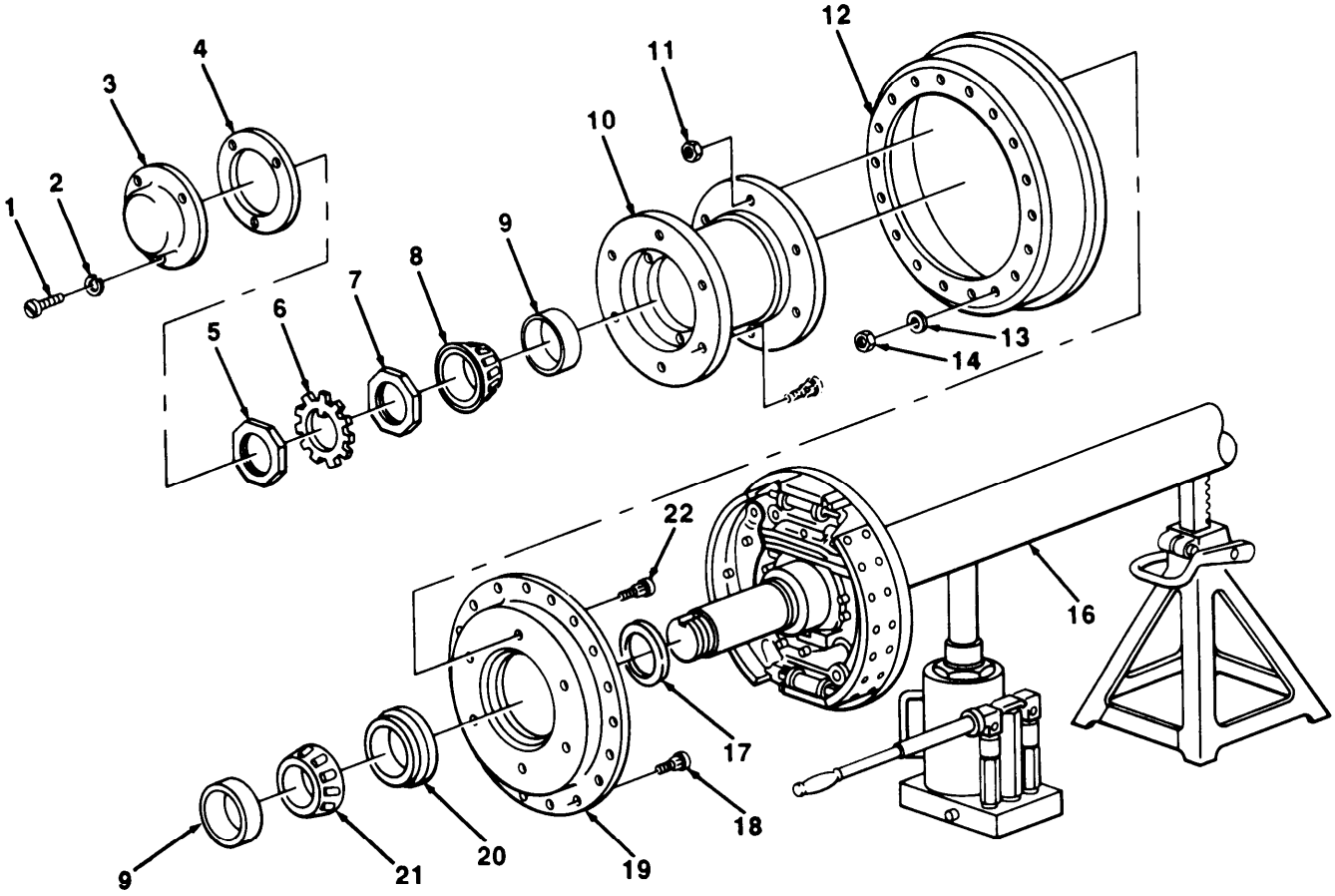

b. DISASSEMBLY

WARNING

DO NOT handle brakeshoes, brakedrums, or other brake components unless area has been properly cleaned. There may be asbestos dust on these components which can be dangerous if you touch it or breathe it. Wear an approved filter mask and gloves. Never use compressed air or a dry brush to clean brake components. Dust may be removed using an industrial-type vacuum cleaner. Clean dust or mud away from brake components with water and a wet, soft brush or cloth. Failure to follow this warning may result in serious illness or death.

1. Remove six nuts (11) and bolts (22) and remove adapter plate (19) and brakedrum (12) from hub (10).

2. Remove 18 nuts (14), flatwashers (13), bolts (18), and adapter plate (19) from brakedrum (12).

TA505304

4-49. HUB, WHEEL BEARING, AND BRAKEDRUM MAINTENANCE (M103A3, M105A2, M105A2C, M107A2, AND M107A2C) (Con't).

NOTE

Perform step 3 only if bearing cups (9) are being replaced. Bearing cups should always be replaced when outer and Inner wheel bearing cones (8 and 21) are replaced.

3. Tap two bearing cups (9) out of hub (10).

4. If damaged, remove six wheel bolts (15) from hub (10).

c. ASSEMBLY

1. If removed, install six wheel bolts (15) in hub (10).

2. If removed, tap two bearing cups (9) into hub (10).

3. Position adapter plate (19) on brakedrum (12), and install 18 bolts (18), flatwashers (13), and nuts (14),

4. Position adapter plate (19) and brakedrum (12) on hub (10) and install six bolts (22) and nuts (11).

NOTE

- Instructions for packing outer and inner wheel bearlng cones (8 and 21) are found in TM 9-214.
- When installing spacer sleeve (17), ensure that flange faces inside of trailer,

5. Pack inner wheel bearing cone (21) with grease, Install inner wheel bearing cone, new oil seal (20), and spacer sleeve (17) on hub (10).

d. INSTALLATION

1. Install hub (10) and brakedrum (12) on axle (16).

2. Pack outer wheel bearing cone (8) with grease, Install outer wheel bearing cone and Inner adjusting nut (7) on hub (10) and axle (16).

e. WHEEL BEARING ADJUSTMENT

1. Tighten inner adjusting nut (7) while turning hub (10) and brakedrum (12) until drag is felt.

2. Rotate hub (10) and brakedrum (12) one full turn. Loosen inner adjusting nut (7) while rocking hub back and forth until looseness is felt.

3. Tighten inner adjusting nut (7) slowly while rocking hub (10) until looseness is no longer felt.

4. Install keyed washer (6) and outer adjusting nut (5) on axle (16). Bend tabs of keyed washer over flat of outer adjusting nut.

5. Install new gasket (4) and hubcap (3) on hub (10) with three new lockwashers (2) and screws (1).

6. Position floor jack under axle (16) and raise enough to remove jackstand.

4-49. HUB, WHEEL BEARING, AND BRAKEDRUM MAINTENANCE (M103A3, M105A2, M105A2C, M107A2, AND M107A2C) (Con't).

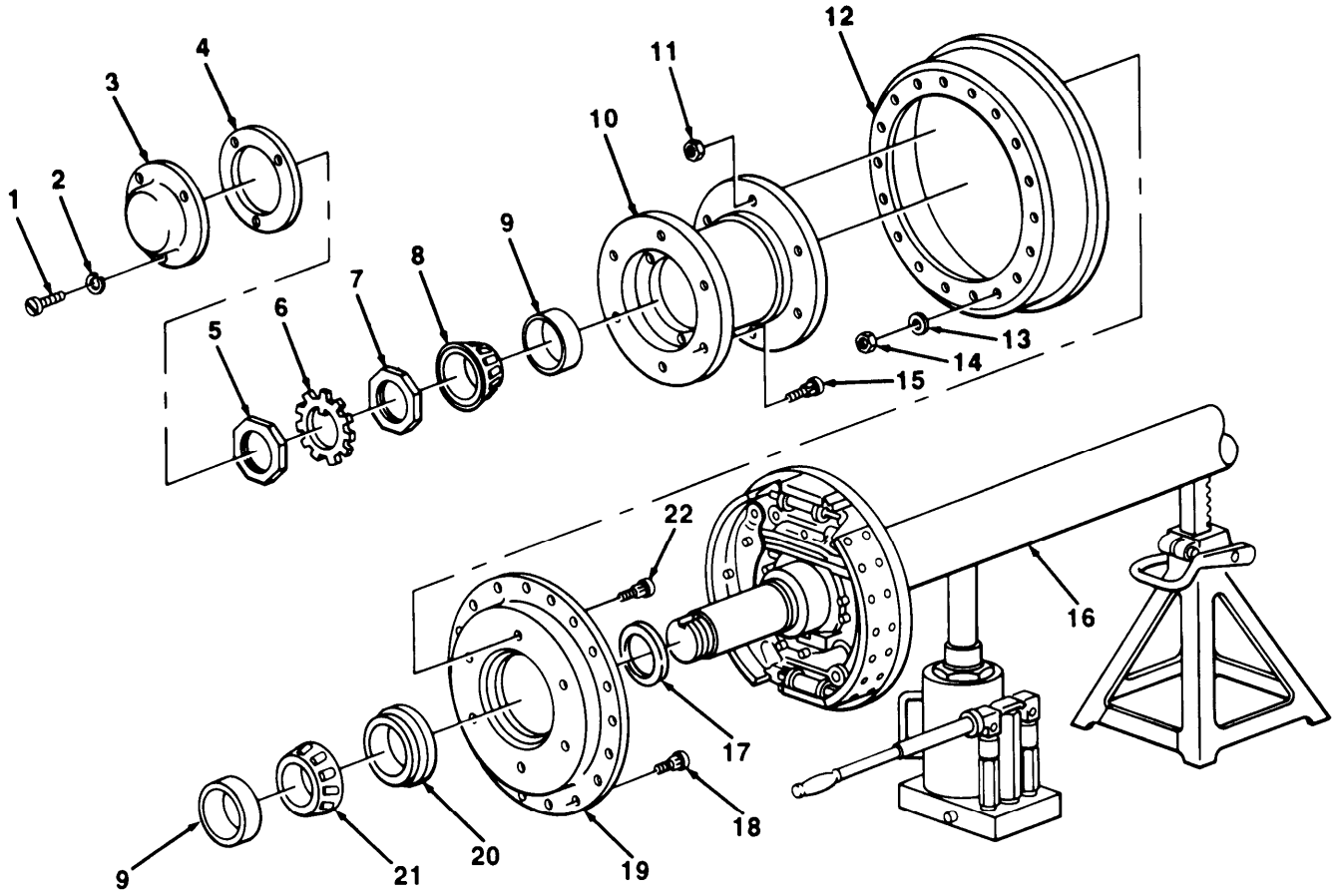

FOLLOW-ON TASKS:

- Adjust brakes (para 4-34).
- Install wheel (para 3-8).

4-50. TIRE AND TUBE MAINTENANCE.

Refer to TM 9-2610-200-24 for instructions on tire and tube maintenance.

TA505305

Section IX. FRAME AND TOWING ATTACHMENTS MAINTENANCE

Paragraph Title	Page Number
Adjustable Caster Assembly Maintenance	4-90
Drawbar Ring Replacement	4-96
Leveling Jack Maintenance (M448)	4-93
Rear Support Leg Replacement (M105 Series)	4-88
Safety Chain Replacement	4-87

4-51. DRAWBAR RING REPLACEMENT.

This Task Covers:

a. Removal

b. Installation

Initial Setup:

Materials/Parts:

- One cotter pin

Tools/Test Equipment:

- General mechanic's tool kit

a. REMOVAL

1. Remove cotter pin (1) from nut (2). Discard cotter pin.
2. Remove nut (2), flatwasher (3), and drawbar ring (5) from drawbar coupler (4).

b. INSTALLATION

NOTE

Drawbar ring (5) is adjustable.

1. Place drawbar ring (5) in high or low position on drawbar coupler (4).
2. Install flatwasher (3) and nut (2) on drawbar ring (5).
3. install new cotter pin (1) on nut (2).

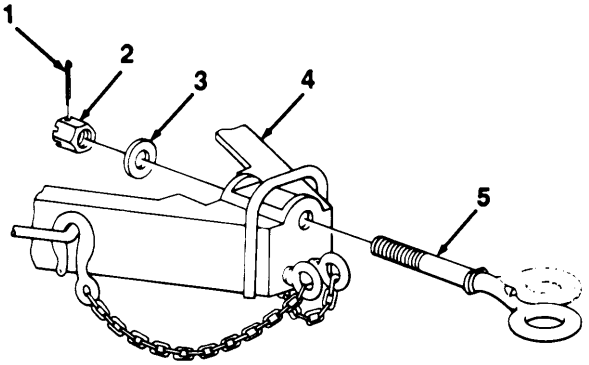

TA505306

4-52. SAFETY CHAIN REPLACEMENT.

This Task Covers:

a. Removal

b. Installation

Initial Setup:

Materials/Parts:

- One lockwasher

Tools/Test Equipment:

- General mechanic's tool kit

a. REMOVAL

1. Unhook safety chain (3) from stowage hook (5).
2. Remove nut (1), lockwasher (2), and safety chain (3) from drawbar coupler (4). Discard lockwasher.

b. INSTALLATION

1. Install safety chain (3) through drawbar coupler (4) with new lockwasher (2) and nut (1).
2. Hook safety chain (3) on stowage hook (5).

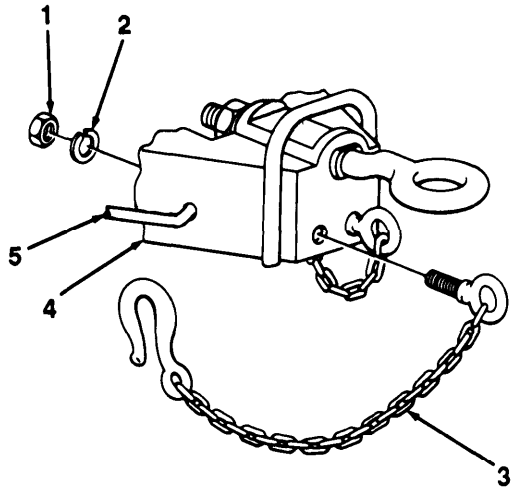

TA505307

4-53. REAR SUPPORT LEG REPLACEMENT (M105 SERIES).

This Task Covers:

a. Removal
b. Cleaning and Inspection
c. Installation

Initial Setup:

Materials/Parts:

- Dry cleaning solvent (Item 6, Appendix E)
- Grease (Item 7, Appendix E)
- One cotter pin
- Four lockwashers

Tools/Test Equipment:

- General mechanic's tool kit

a. REMOVAL

1. Remove cotter pin (9), pin (8), and spring (10) from rear support leg (7). Discard cotter pin.
2. Remove nut (5), screw (12), and rear support leg (7) from bracket (11). Remove grease fitting (6).
3. Remove two nuts (15), lockwashers (14), screws (13), and bracket (11) from frame (3). Discard lockwashers.
4. Remove two nuts (1), lockwashers (2), screws (4), and bracket (16) from frame (3). Discard lockwashers.

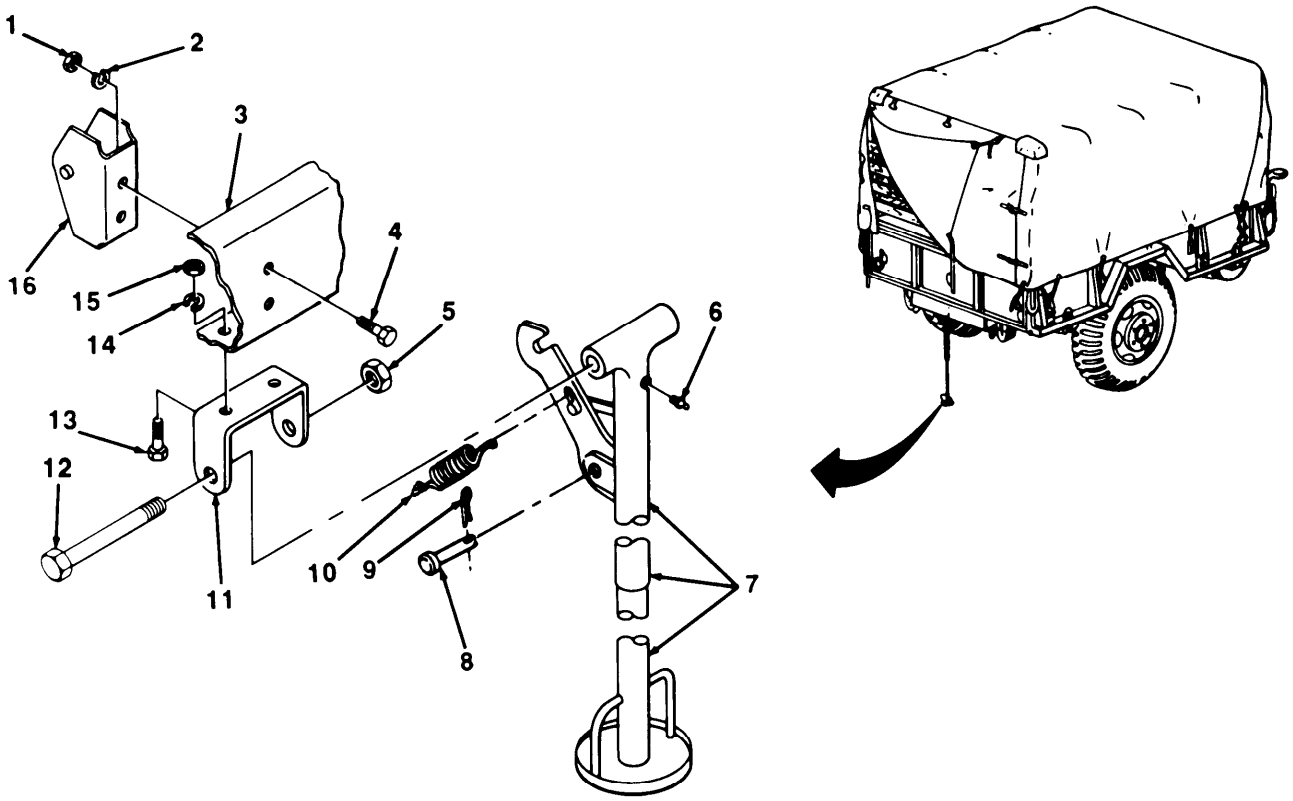

TA505308

4-53. REAR SUPPORT LEG REPLACEMENT (M105 SERIES) (Con't).

b. CLEANING AND INSPECTION

WARNING

Dry cleaning solvent P-D-680 is toxic and flammable. Always wear protective goggles and gloves, and use only in a well-ventilated area. Avoid contact with skin, eyes, and clothes, and DO NOT breathe vapors. DO NOT use near open frame or excessive heat. The solvent's flash point is 100°F-130°F (38°C-59°C). If you become dizzy while using cleaning solvent, immediately get fresh air and medical help, If solvent contacts eyes, immediately wash your eyes and get medical aid.

1. Clean all parts with dry cleaning solvent. Dry thoroughly.
2. Inspect ail parts for damage. Replace any damaged parts.

c. INSTALLATION

1. Install bracket (16) to frame (3) with two screws (4), new lockwashers (2), and nuts (1),
2. install bracket (11) to frame (3) with two screws (13), new lockwashers (14), and nuts (15).
3. Install rear support leg (7) to bracket (11) with screw (12) and nut (5). Install grease fitting (6).
4. Install spring (10), pin (8), and new cotter pin (9) in rear support leg (7).
5. Lubricate roar support leg (7) at grease fitting (6) (Chapter 3, Section 1).

4-54. ADJUSTABLE CASTER ASSEMBLY MAINTENANCE.

This Task Covers:

a. Removal
b. Disassembly
c. Cleaning and Inspection
d. Assembly
e. Installation

Initial Setup:

Materials/Parts:

- Dry cleaning solvent (Item 6, Appendix E)
- Two cotter pins
- Five lockwashers

Tools/Test Equipment:

- General mechanic's tool kit
- Floor jack
- Two jackstands

a. REMOVAL

1. Raise front of trailer and position two jackstands under chassis (8).
2. Remove nut (1), lockwasher (2), and bolt (4) from yoke (10) and frame (3). Discard lockwasher.
3. Remove adjustable caster assembly (9) from frame (3).

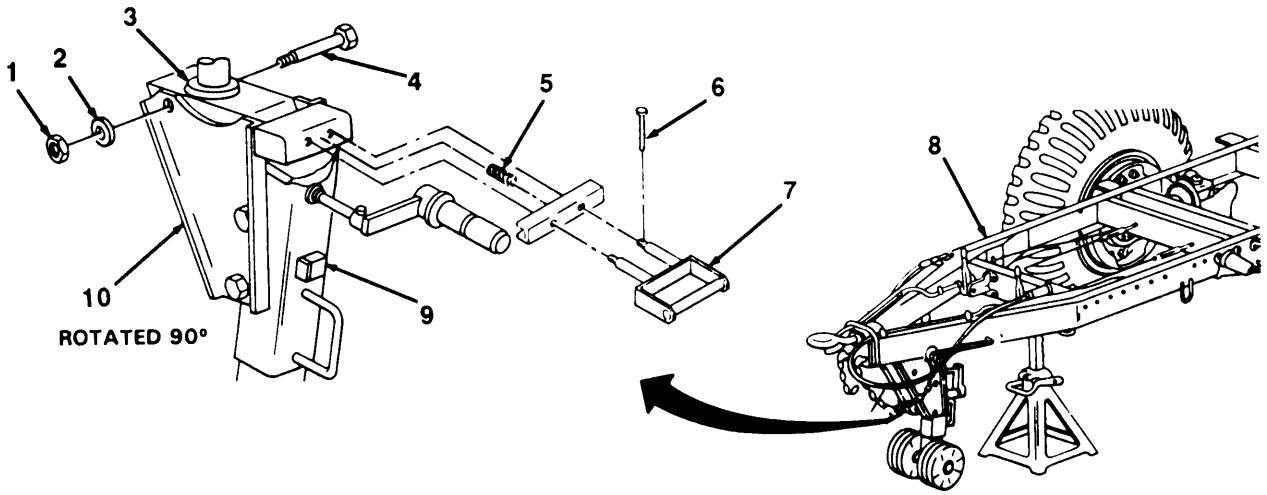

b. DISASSEMBLY

1. Remove two pins (6), release handle (7), and spring (5) from adjustable caster assembly (9).
2. Remove four bolts (22), lockwashers (21), and landing leg (11) from yoke (10). Discard lockwashers.
3. Remove nut (16), bolt (14) and handle (15) from handcrank (13).
4. Remove nut (17), bolt (12), and handcrank (13) from landing leg (11).
5. Remove two cotter pins (18), wheels (19), and axle (20) from landing leg (11). Discard cotter pins.

TA505309

4-54. ADJUSTABLE CASTER ASSEMBLY MAINTENANCE (Con't).

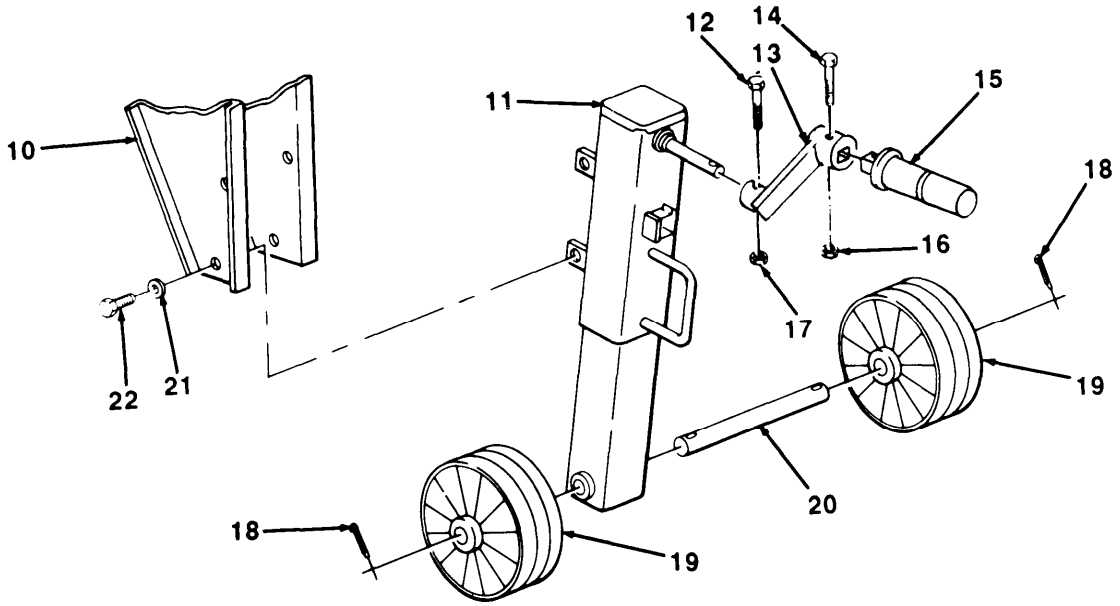

c. CLEANING AND INSPECTION

WARNING

Dry cleaning solvent P-D-680 is toxic and flammable. Always wear protective goggles and gloves, and use only in a weii-ventilated area. Avoid contact with skin, eyes, and clothes, and DO NOT breathe vapors. DO NOT use near open frame or excessive heat. The solvent's flash point is 100°F-130°F (38°C-59°C). if you become dizzy while using cleaning solvent, immediately get fresh air and medical help. if solvent contacts eyes, immediately wash your eyes and get medical aid.

1. Clean all parts in dry cleaning solvent. Dry thoroughly.
2. Inspect all parts for damage. Replace any damaged parts.

d. ASSEMBLY

1. Position axle (20) and two wheels (19) on landing leg (11) and install two new cotter pins (18).
2. Install handcrank (13) to landing leg (11) with bolt (12) and nut (17).
3. Install handle (15) to handcrank (13) with bolt (14) and nut (16).
4. Install landing leg (11) to yoke (10) with four new Iockwashers (21) and bolts (22).
5. Position spring (5) and release handle (7) on adjustable caster assembly (9) and install two pins (6).

TA505310

4-54. ADJUSTABLE CASTER ASSEMBLY MAINTENANCE (Con't).

e. INSTALLATION

1. Position adjustable caster assembly (9) and yoke (10) at frame (3) and install bolt (4), new lockwasher (2), and nut (1).

2. Remove two jackstands from under chassis (8) and lower front of trailer to ground.

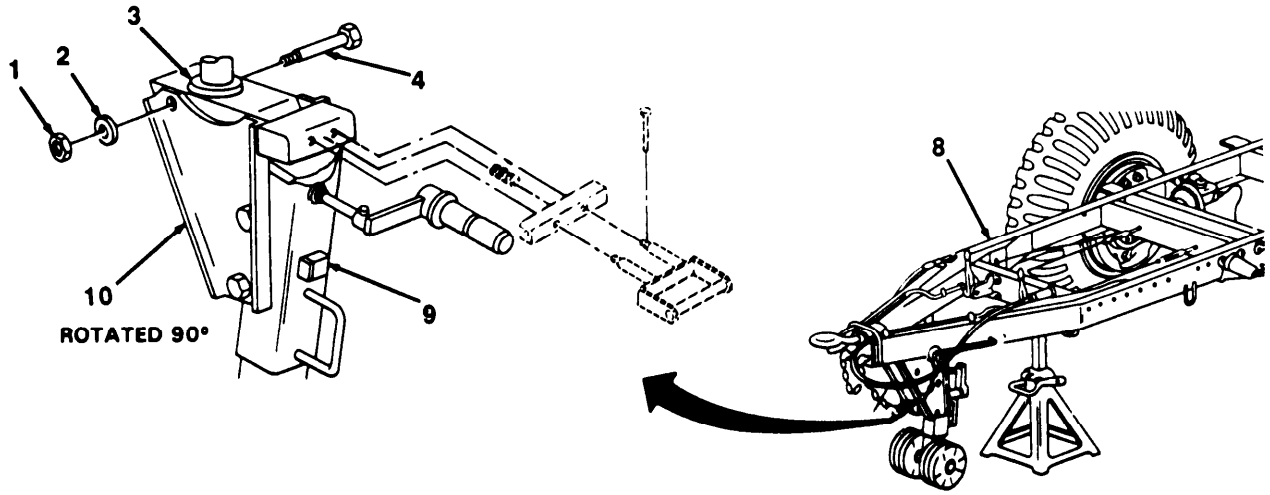

TA505311

4-55. LEVELING JACK MAINTENANCE (M448).

This Task Covers:

a. Disassembly
b. Cleaning and Inspection
c. Assembly

Initial Setup:

Materials/Parts:

- Dry cleaning solvent (Item 6, Appendix E)

Tools/Test Equipment:

- General mechanic's tool kit
- Common No. 1 shop set
- Retaining ring pliers

a. DISASSEMBLY

1. Remove nut (4) from handle (1) and housing (14).

2. Remove flatwasher (5), sleeve (6), two pins (9), ratchet pawls (7), and springs (8). Remove handle (1), spring (2), and ball bearing (3) from housing (14).

3. Remove housing (14) from tube assembly (13).

4. Remove retaining ring (12), ratchet wheel (11), and screw (10) from housing (14).

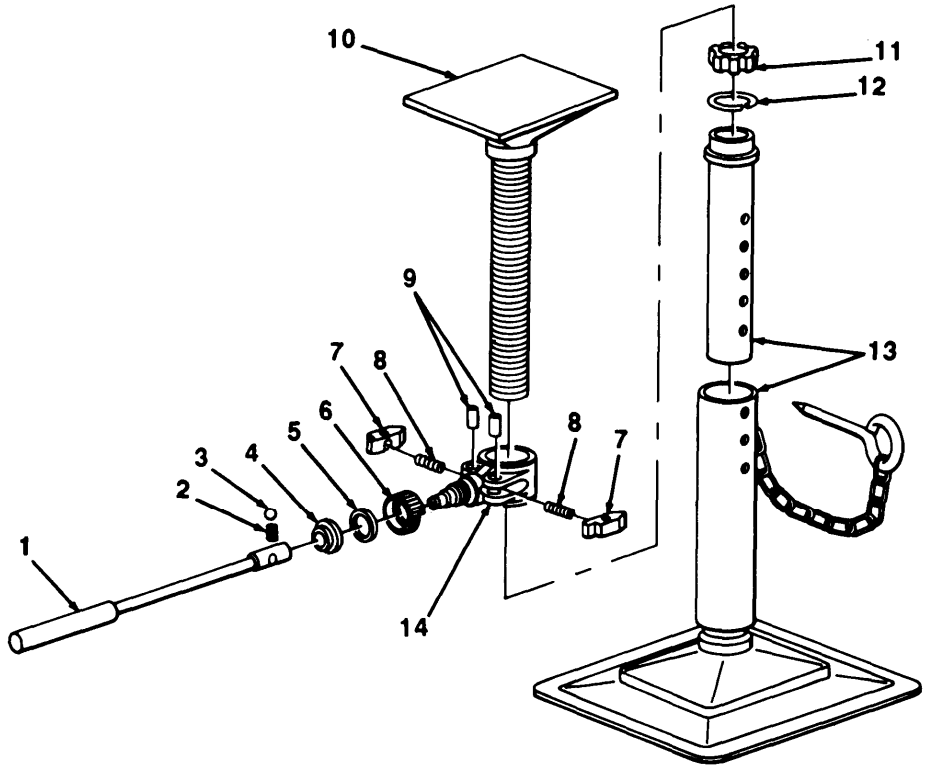

TA505312

4-55. LEVELING JACK MAINTENANCE (M448) (Con't).

b. CLEANING AND INSPECTION

WARNING

Dry cleaning solvent P-D-680 is toxic and flammable. Always wear protective goggles and gloves, and use only in a well-ventilated area. Avoid contact with skin, eyes, and clothes, and DO NOT breathe vapors. DO NOT use near open flame or excessive heat. The solvent's flash point is 100°F-130°F (38°C-59°C). If you become dizzy while using cleaning solvent, immediately get fresh air and medical help, if solvent contacts eyes, immediately wash your eyes and got medical aid.

1. Clean all parts with dry cleaning solvent. Dry thoroughly.
2. Inspect all parts for damage. Replace any damaged parts.

c. ASSEMBLY

1. Position ratchet wheel (11) and screw (10) on housing (14) and install retaining ring (12).
2. Position housing (14) on tube assembly (13).
3. Position handle (1), spring (2), ball bearing (3), two ratchet pawls (7), and springs (8) on housing (14), Install two pins (9).
4. Position sleeve (6) and flatwasher (5) on housing (14). Install nut (4).

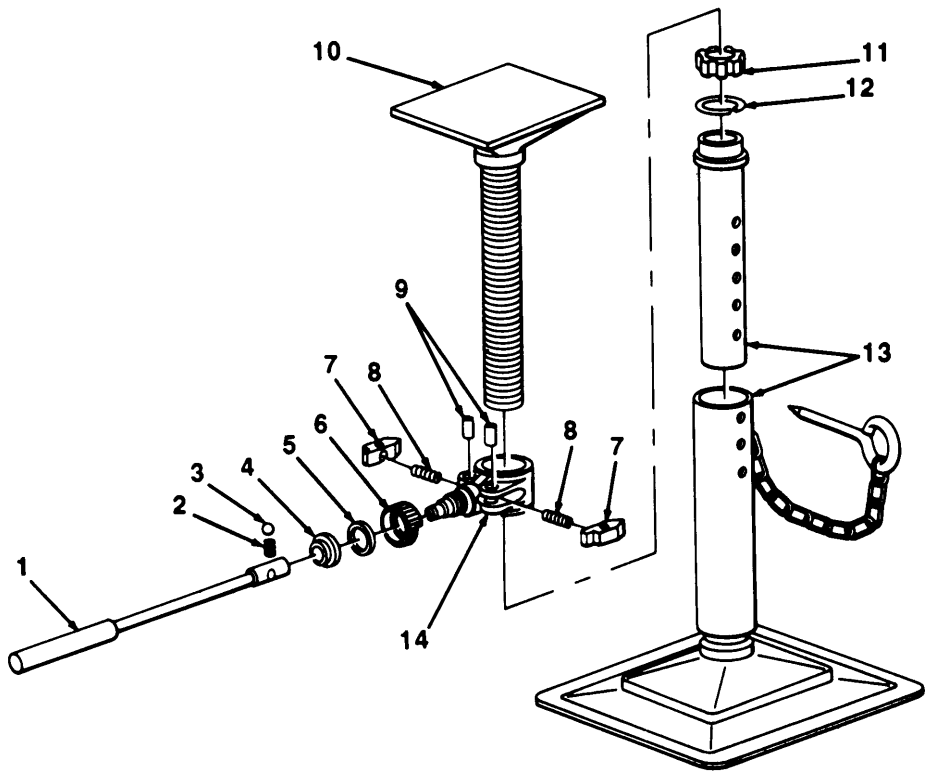

TA505313

Section X. SPRINGS AND SHOCK ABSORBERS MAINTENANCE

Paragraph Title	Page Number
Spring Replacement	4-95
Spring Shackle Replacement	4-98

4-56. SPRING REPLACEMENT.

This Task Covers:

a. Removal
b. Cleaning and inspection
c. Installation

Initial Setup:

Equipment Conditions:

- Wheel removed (para 3-8).

Tools/Test Equipment:

- General mechanic's tool kit
- Floor jack
- Jackstand

Materials/Parts:

- Dry cleaning solvent (Item 6, Appendix E)
- Three lockwashers

Personnel Required: Two

4-56. SPRING REPLACEMENT (Con't).

a. REMOVAL

NOTE

Right and left springs (13) are removed the same way. This procedure covers one spring.

1. Position jackstand under rear crossmember (1) and lower axle (15) with floor jack enough to remove weight from spring (13).
2. Remove four nuts (4), two U-bolts (14), plates (3 and 16), and auxiiiary spring (12) from spring (13).
3. Lower floor jack enough to give 1 in. (2.5 cm) clearance between spring (13) and axle (15).
4. Remove grease fitting (9), two nuts (11), lockwashers (10), and screws (7) from shackle (6). Discard lockwashers.
5. Tap pin (8) out of shackle (6) and disconnect spring (13).
6. Remove grease fitting (17), nut (19), lockwasher (20), and screw (21) from spring hanger (2). Discard lockwasher.
7. Tap pin (18) out of spring hanger (2). Remove spring (13),

b. CLEANING AND INSPECTION

WARNING

Dry cleaning solvent P-D-680 is toxic and flammable. Always wear protective goggles and gloves, and use only in a well-ventilated area. Avoid contact with skin, eyes, and clothes, and DO NOT breathe vapors. DO NOT use near open frame or excessive heat. The solvent's flash point is 100°F-130°F (38°C-59°C). If you become dizzy while using cleaning solvent, Immediately get fresh air and medical help. If solvent contacts eyes, immediately wash your eyes and get medical aid.

1. Clean all parts with dry cleaning solvent. Dry thoroughly.
2. Inspect all parts for damage. Replace all damaged parts.

c. INSTALLATION

NOTE

Right and left springs (13) are installed the same way. This procedure covers one spring.

1. Position spring (13) at spring hanger (2) and tap in pin (18), alining groove for screw (21).
2. Install screw (21), new lockwasher (20), nut (19), and grease fitting (17) to spring hanger (2).
3. Position spring (13) in shackle (6) on spring hanger (5). Tap pin (8) in shackle.
4. Install two screws (7), new lockwashers (10), nuts (11), and grease fitting (9) in shackle (6).

4-56. SPRING REPLACEMENT (Con't).

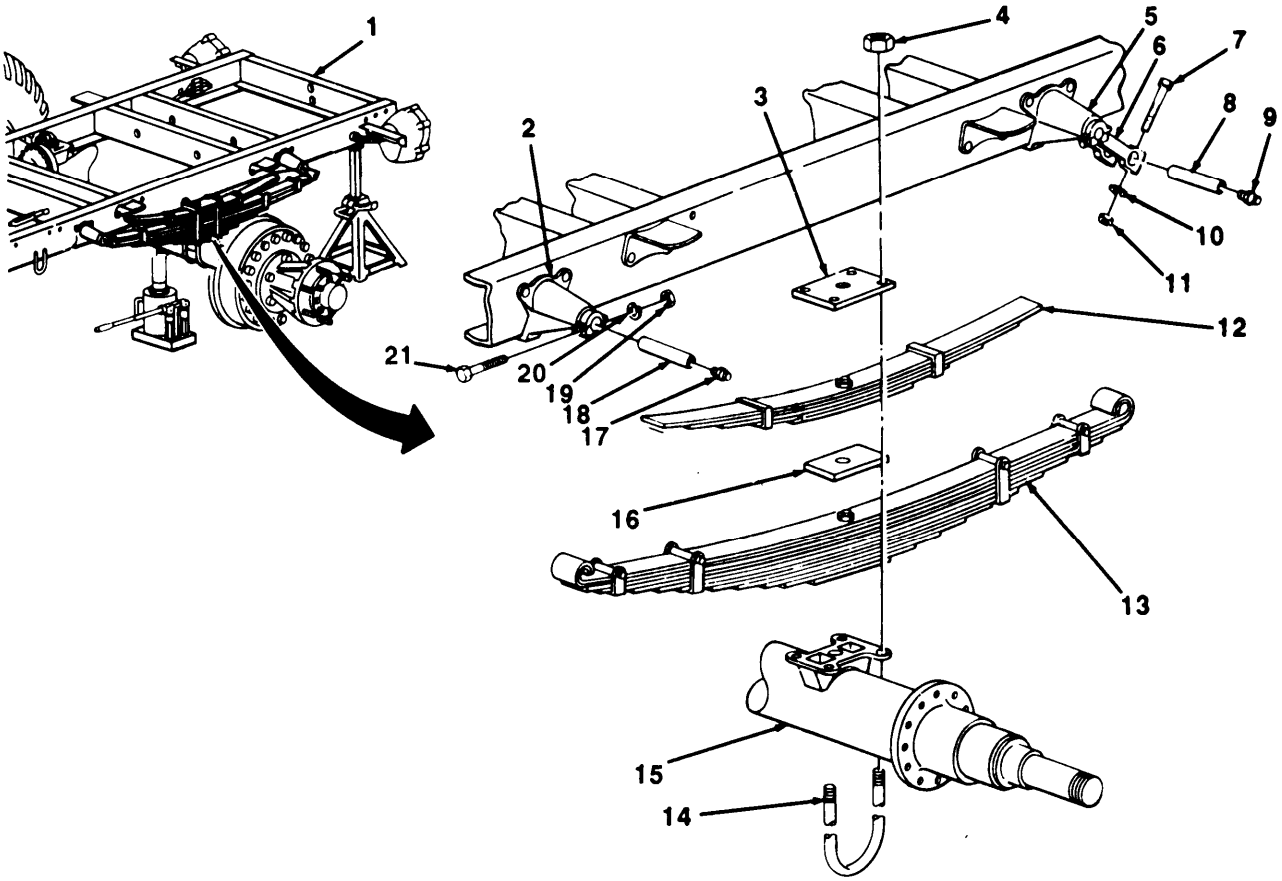

5. Raise axle (15) with floor jack enough to aline axle with spring (13).

6. Position plates (3 and 16) and auxiliary spring (12) on spring (13) and install two U-bolts (14) and four nuts (4).

7. Raise floor jack and remove jackstand from rear crossmember (1).

FOLLOW-ON TASKS:

- Lubricate spring shackle pins (Chapter 3, Section 1).
- Install wheel (para 3-8).

TA505314

4-57. SPRING SHACKLE REPLACEMENT.

This Task Covers:

a. Removal
b. Cleaning and Inspection
c. Installation

Initial Setup:

Equipment Conditions:
- Wheel removed (para 3-8).

Tools/Test Equipment:
- General mechanic's tool kit
- Floor jack
- Jackstand

Materials/Parts:
- Dry cleaning solvent (Item 6, Appendix E)
- Three lockwashers

Personnel Required: Two

a. REMOVAL

NOTE

Right and left spring shackles (13) are removed the same way. This procedure covers one spring shackle.

1. Position jackstand under rear crossmember (1) and lower axle (15) with floor jack enough to remove weight from spring (10).
2. Remove grease fitting (8), two nuts (11), lockwashers (12), screws (7), and pin (9) from spring shackle (13). Discard lockwashers.
3. Remove grease fitting (6), nut (4), lockwasher (3), screw (14), and pin (5) from spring hanger (2). Discard lockwasher.
4. Remove spring shackle (13) from spring hanger (2).

b. CLEANING AND INSPECTION

WARNING

Dry cleaning solvent P-D-680 is toxic and flammable. Always wear protective goggles and gloves, and use only in a well-ventilated area. Avoid contact with skin, eyes, and clothes, and DO NOT breathe vapors. DO NOT use near open flame or excessive heat. The solvent's flash point is 100°F-130° (38°C-59°C). if you become dizzy while using cleaning solvent, immediately get fresh air and medical help. If solvent contacts eyes, immediately wash your eyes and get medical aid.

1. Use dry cleaning solvent to clean mud and dirt from all exposed parts, including spring bearings, shackle bearings, and shackle pins.
2. Inspect all removed parts for damage. Replace if damaged.

4-57. SPRING SHACKLE REPLACEMENT (Con't).

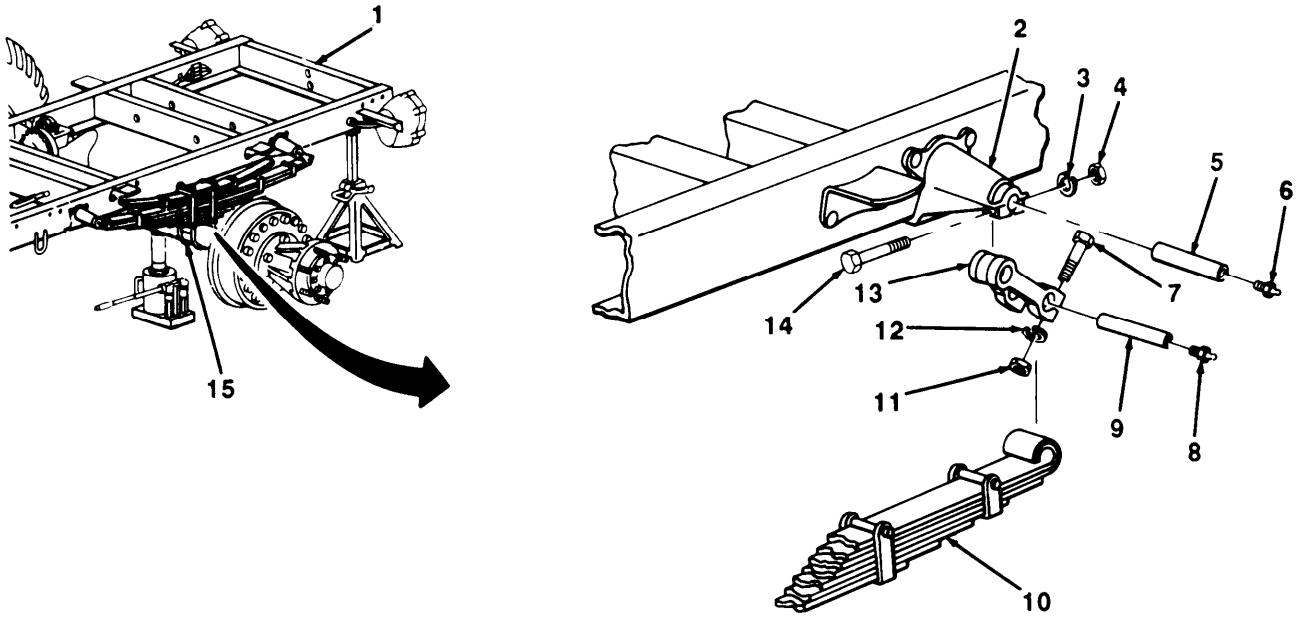

c. INSTALLATION

NOTE

Right and left spring shackles (13) are installed the same way. This procedure covers one spring shackle.

1. Position spring shackle (13) at spring hanger (2) and install pin (5) with groove alined for screw (14). Install screw, new lockwasher (3), nut (4), and grease fitting (6).
2. Aline spring (10) with spring shackle (13) and install pin (9). Install two screws (7), new lockwashers (1 2), nuts (11), and grease fitting (8) on shackle.
3. Raise floor jack and remove jackstand from rear crossmember (1).

FOLLOW-ON TASKS:

- Lubricate spring shackle (Chapter 3, Section 1).
- Install wheel (para 3-8).

TA505315

Section XI. CARGO BODY MAINTENANCE (M105 SERIES)

4-58. TAILGATE REPLACEMENT,

This Task Covers:

a. Removal

b. Installation

Initial Setup:

Materials/Parts:

- Two lockwashers
- Four cotter pins

Tools/Test Equipment:

- Tool kit, general mechanic's

Personnel Required: Two

a. **REMOVAL**

1. Secure tailgate (5) in closed position with two safety chain hooks (1).

NOTE

Step 2 applies only to M105A2.

2. Remove two screws (9), lockwashers (8), flatwashers (7), and bumpers (6) from tailgate (5). Discard lockwashers.

3. Remove four cotter pins (3) and hinge pins (4) from tailgate (5) and body (2). Discard cotter pins.

NOTE

Assistance is required to support tailgate (5) for step 4.

4. Unhook two safety chain hooks (1) and remove tailgate (5) from body (2).

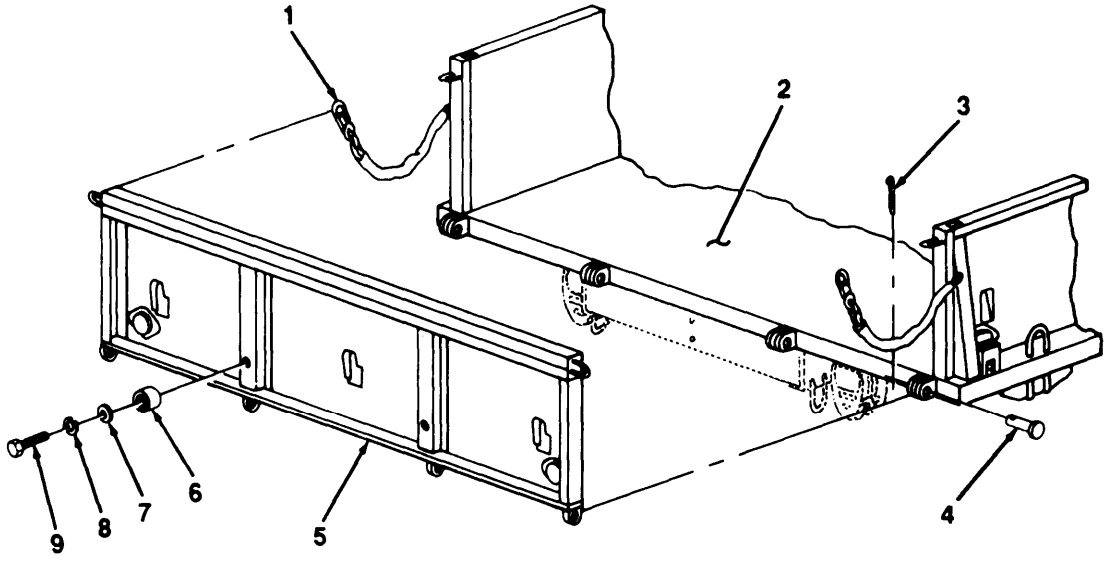

TA505316

4-58. TAILGATE REPLACEMENT (Con't).

b. INSTALLATION

NOTE

Assistance is required to support tailgate (5) for step 1.

1. Position tailgate (5) on body (2) in closed position and secure with two safety chain hooks (1).
2. Install four hinge pins (4) and new cotter pins (3) on tailgate (5) and body (2).

NOTE

Step 3 applies only to M105A2.

3. Install two bumpers (6) with flatwashers (7), new lockwashers (8), and screws (9).

Section XII. WATER TANK BODY MAINTENANCE (M107 SERIES)

Paragraph Titie	Page Number
Fender and Fender Extensions Replacement	4-102
Piping and Valves Replacement	4-104
Vent Maintenance	4-109

4-59. FENDER AND FENDER EXTENSIONS REPLACEMENT.

This Task Covers:

a. Removal

b. Installation

Initial Setup:

Materiais/Parts:

- Fifteen lockwashers

Toois/Test Equipment:

- General mechanic's tool kit

a. REMOVAL

NOTE

Right and left fenders (14) and fender extensions (9 and 16) are removed the same way. This procedure covers one side.

1. Remove nut (2), lockwasher (3), and screw (15) securing underside offender extension (16) to chassis frame (1). Discard lockwasher,

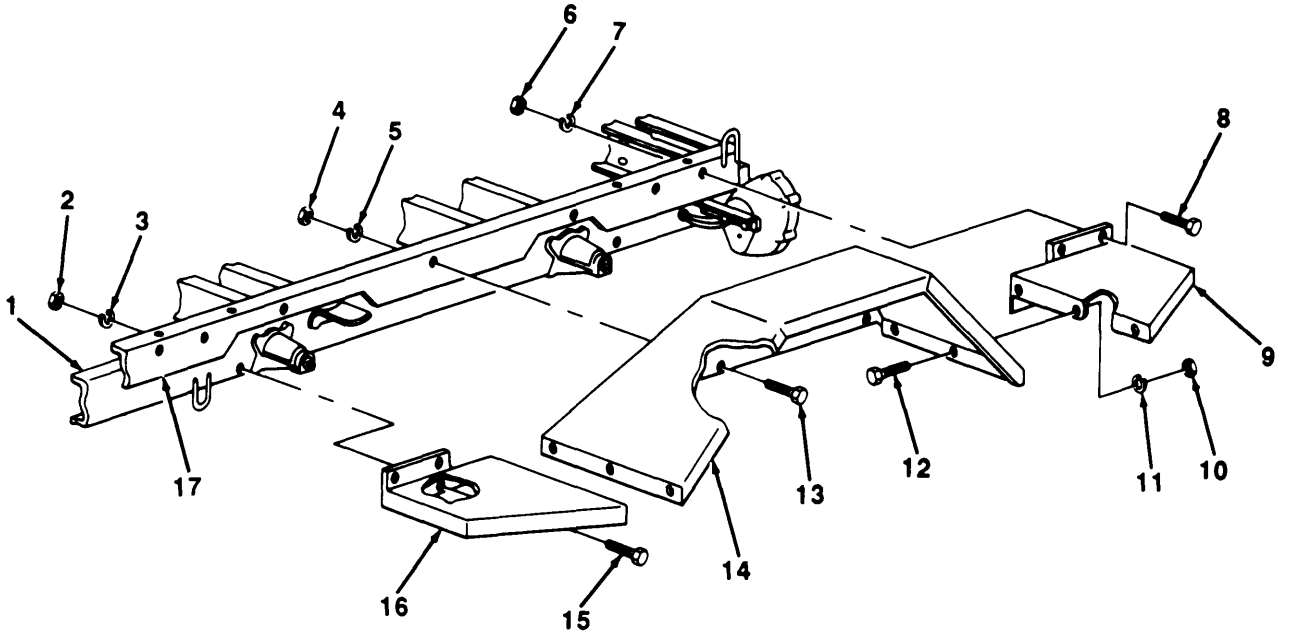

TA505317

4-59. FENDER AND FENDER EXTENSIONS REPLACEMENT (Con't).

2. Remove three nuts (10), lockwashers (11), and screws (12) securing fender extension (16) to fender (14). Discard lockwashers.

3. Remove two nuts (6), lockwashers (7), screws (8), and fender extension (16) from tank frame (17) . Discard lockwashers.

4. Repeat steps 1 through 3 to remove fender extension (9) .

5. Remove three nuts (4), lockwashers (5), screws (13), and fender (14) from tank frame (17). Discard lockwashers.

b. INSTALLATION

NOTE

Right and ieft fenders (14) and fender extension (9 and 16) are installed the same way. This procedure covers one side.

1. Position fender (14) on tank frame (17) and loosely install three screws (13), new lockwashers (5), and nuts (4).

2. Position fender extension (16) on tank frame (17) and loosely install two screws (8), new lockwashers (7), and nuts (6).

3. Loosely install three screws (12), new lockwashers (11), and nuts (10) to fender extension (16) and fender (14).

4. Loosely install screw (15), new lockwasher (3), and nut (2) to underside of fender extension (16) and chassis frame (1).

5. Repeat steps 2 through 4 to install fender extension (9).

6. Fully tighten three nuts (4), four nuts (6), six nuts (10), and two nuts (2).

4-60. PIPING AND VALVES REPLACEMENT.

This Task Covers:

a. Removal
b. Cleaning and Inspection
c. Installation

Initial Setup:

Equipment Conditions:
- Discharge valve in OFF position.

Toois/Test Equipment:
- General mechanic's tool kit

Materiais/Parts:
- One hose
- Ten lockwashers

a. REMOVAL

NOTE

if removing faucets (6) oniy, perform step 1.

1. Remove six faucets (6) from two faucet boxes (5 and 7).
2. Remove four nuts (1), lockwashers (2), screws (3), and plate (4) from two faucet boxes (5 and 7). Discard iockwashers.

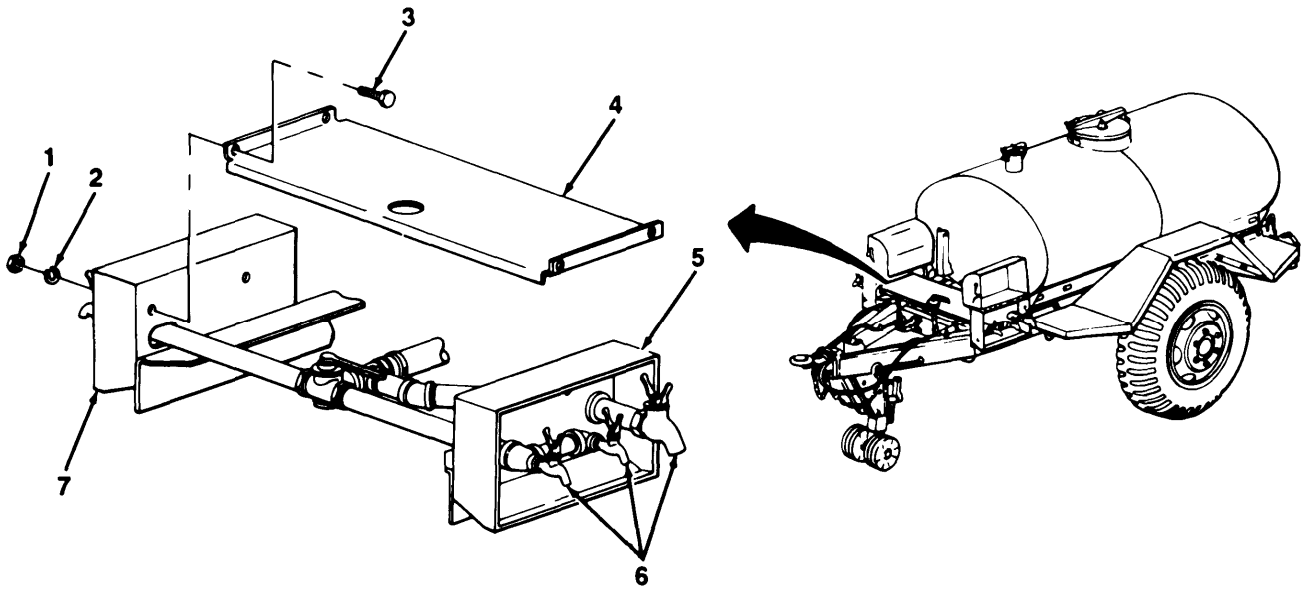

TA505318

4-60. PIPING AND VALVES REPLACEMENT (Con't).

3. Remove two clamps (8) and hose (9) from nipple (19) and discharge valve (14). Discard hose.

4. Remove six nuts (13), lockwashers (12), bolts (10), and three guards (11 and 15). Discard lockwashers.

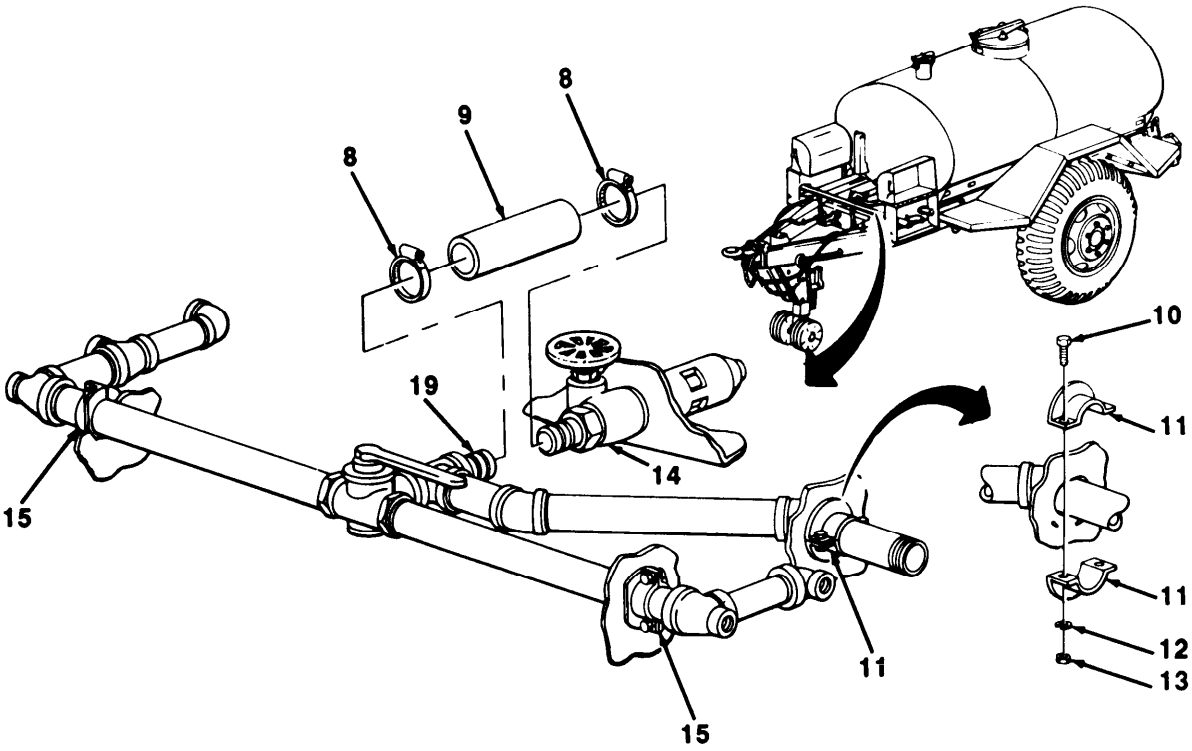

TA505319

4-60. PIPING AND VALVES REPLACEMENT (Con't).

5. Remove elbow (31), nipple (32), and tee (33) from pipe (17).
6. Remove elbow (24), nipple (23), tee (22), nipple (21), and tee (20) from pipe (18).
7. Remove nipple (30), elbow (29), pipe (16), elbow (28), nipple (27), and nipple (19) from tee (26).
8. Remove tee (26), nipple (25), and pipe (18) from manifold valve (34).
9. Remove manifold valve (34) and pipe (17) from faucet box (5).

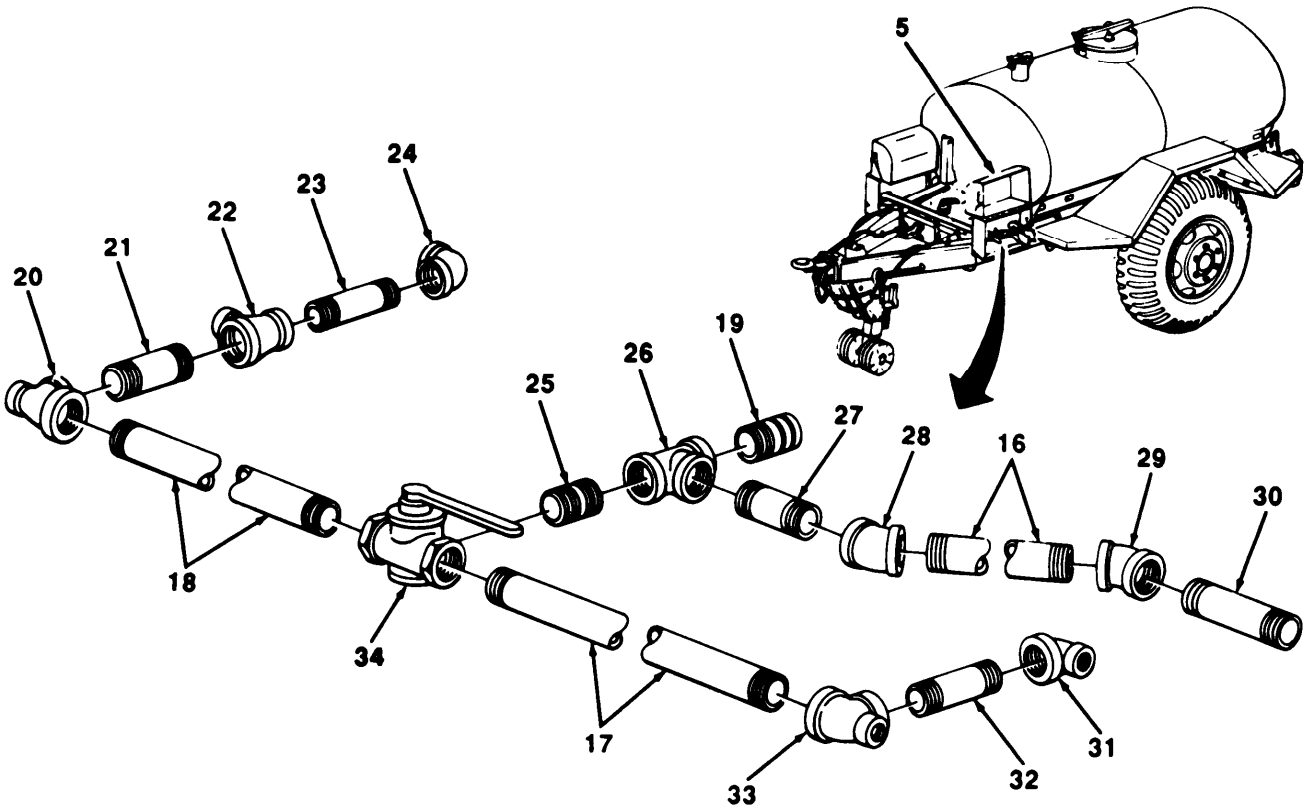

b. CLEANING AND INSPECTION

1. Clean all parts and inspect for cracks, damaged threads, and evidence of leakage.
2. Replace any damaged parts.

c. INSTALLATION

NOTE

If installing faucets (6) oniy, perform step 9.

1. Position pipe (17) in faucet box (5) and install manifold valve (34).
2. Install pipe (18), nipple (25), and tee (26) on manifold valve (34).

TA505320

4-60. PIPING AND VALVES REPLACEMENT (Con't).

3. Install nipple (19), nipple (27), elbow (28), pipe (16), elbow (29), and nipple (30) On tee (26).

4. Install tee (20), nipple (21), tee (22), nipple (23), and elbow (24) on pipe (18).

5. Install tee (33), nipple (32), and elbow (31) on pipe (17).

6. Position three guards (11 and 15) on pipes (17 and 18) and nipple (30) and install six bolts (10), new lockwashers (12), and nuts (13).

7. Position new hose (9) on nipple (19) and discharge valve (14) and install two clamps (8).

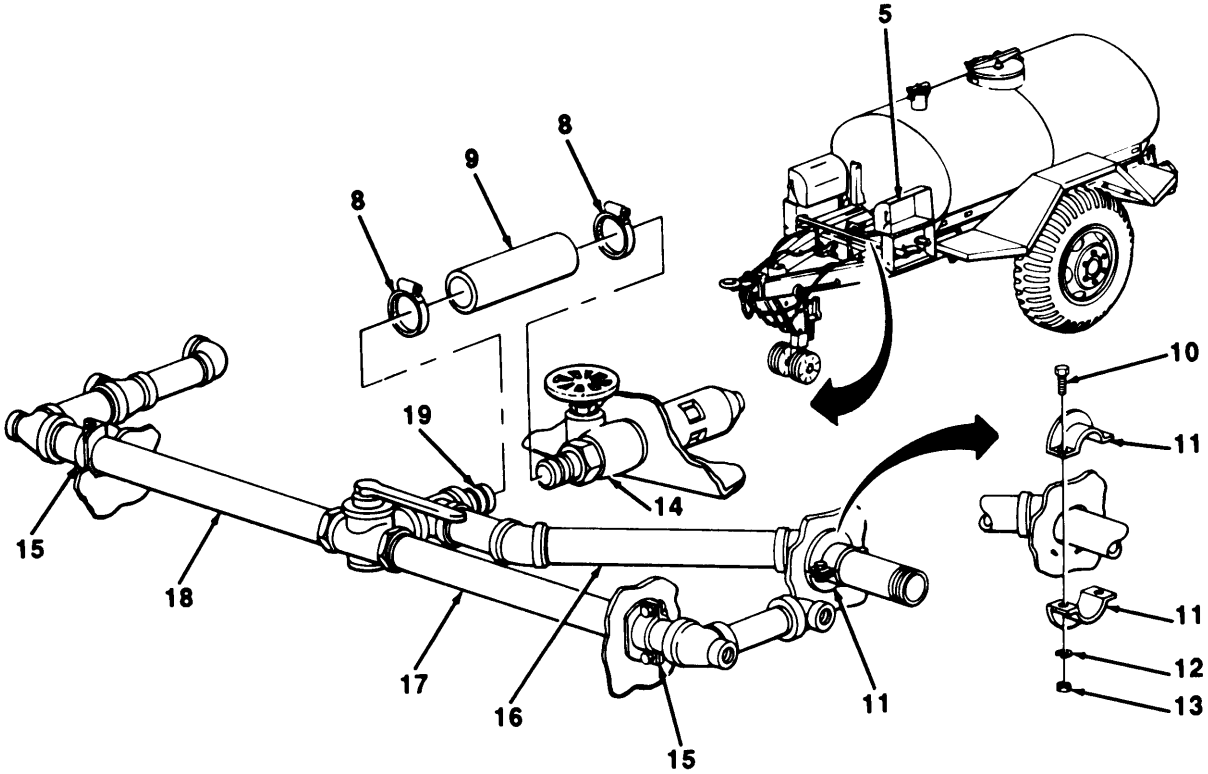

TA505321

4-60. PIPING AND VALVES REPLACEMENT (Con't).

8. Position plate (4) on two faucet boxes (5 and 7) and install four screws (3), new lockwashers (2), and nuts (1).

9. Install six faucets (6) in two faucet boxes (5 and 7).

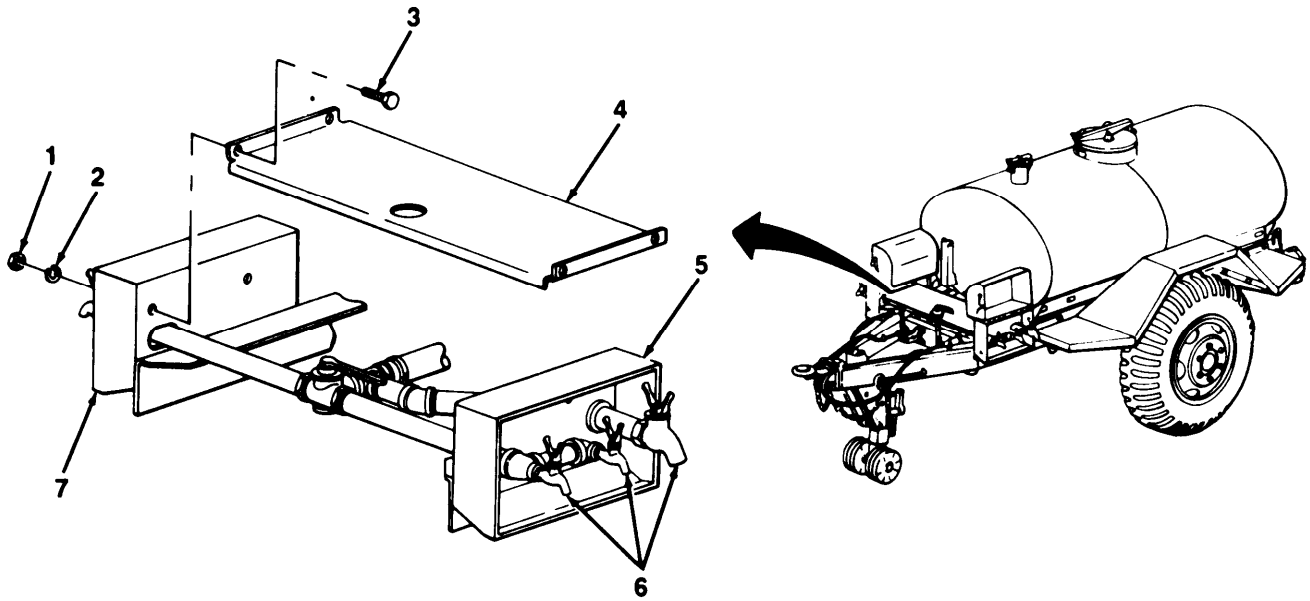

TA505322

4-61. VENT MAINTENANCE.

This Task Covers:

a. Disassembly
b. Cleaning and Inspection
c. Assembly

Initial Setup:

Materiais/Parts:

- Three cotter pins

Tools/Test Equipment:

- General mechanic's tool kit

a. DISASSEMBLY

1. Remove wingnut (2) and flatwasher (1) from bolt (12). Remove cotter pin (11), flatwasher (10), pin *(9),* and bolt from vent (8). Discard cotter pin.
2. Remove cotter pin (16), flatwasher (15), pin (13), and disconnect hinge (3) from cover (14). Remove cover. Discard cotter pin.
3. Remove cotter pin (5), flatwasher (6), pin (7), and hinge (3) from vent (8) . Remove strainer (4) from vent. Discard cotter pin.

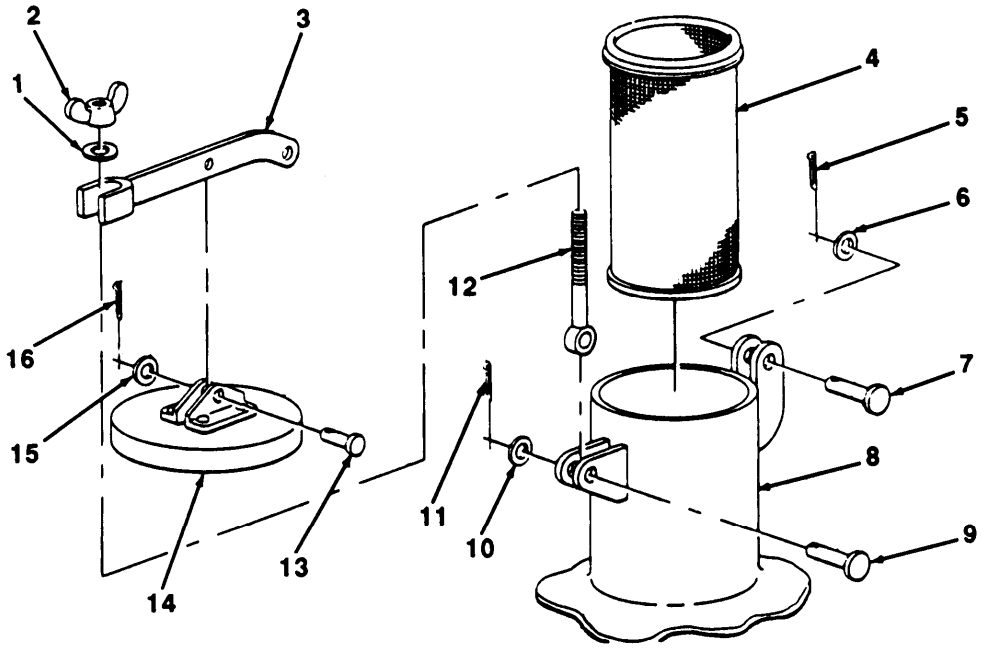

b. CLEANING AND inspection

1. Clean all parts and inspect for damage.
2. Replace any damaged parts.

TA505323

4-61. VENT MAINTENANCE (Con't).

c. ASSEMBLY

1. Install strainer (4) inside vent (8). Position hinge (3) on vent and install pin (7), flatwasher (6), and new cotter pin (5).

2. Position cover (14) on vent (8). Connect hinge (3) to cover with pin (13), flatwasher (15), and new cotter pin (16).

3. Install bolt (12) on vent (8) with pin (9), flatwasher (10) and new cotter pin (11). Install flatwasher (1) and wingnut (2) on bolt.

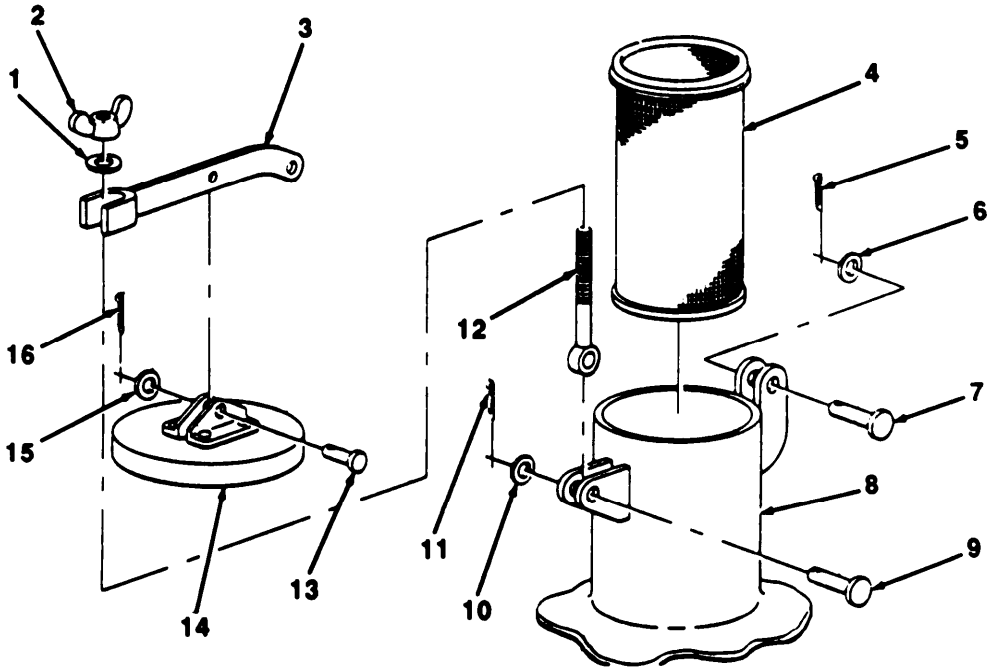

TA505324

Section XIII. SHOP VAN BODY MAINTENANCE (M448)

Paragraph Title	Page Number
Front Ventilator Replacement	4-133
Left Rear Door Maintenance	4-110
110-volt Electrical System Maintenance	4-134
110-volt Electrical System Testing	4-141
Rear Door Seal and Bumper Replacement	4-127
Receptacle Repair	4-143
Right Rear Door Maintenance	4-116
Side Door Latch Replacement	4-131
Side Door Maintenance	4-121
Side Door Upper Seal and Molding Replacement	4-130

4-62. LEFT REAR DOOR MAINTENANCE.

This Task Covers:

a. Removal
b. Disassembly
c. Assembly
d. Installation

Initial Setup:

Materials/Parts:

- One cotter pin
- One seal
- **Thirty-one lockwashers**

Tools/Test Equipment:

- General mechanic's tool kit

Personnel Required: Two

4-62. LEFT REAR DOOR MAINTENANCE (Con't).

a. REMOVAL

1. Remove ladder from door (6).
2. Open door (6). While assistant supports door, remove 14 screws (4) and door from hinge (2),
3. Remove 14 screws (3) and hinge (2) from body (1).

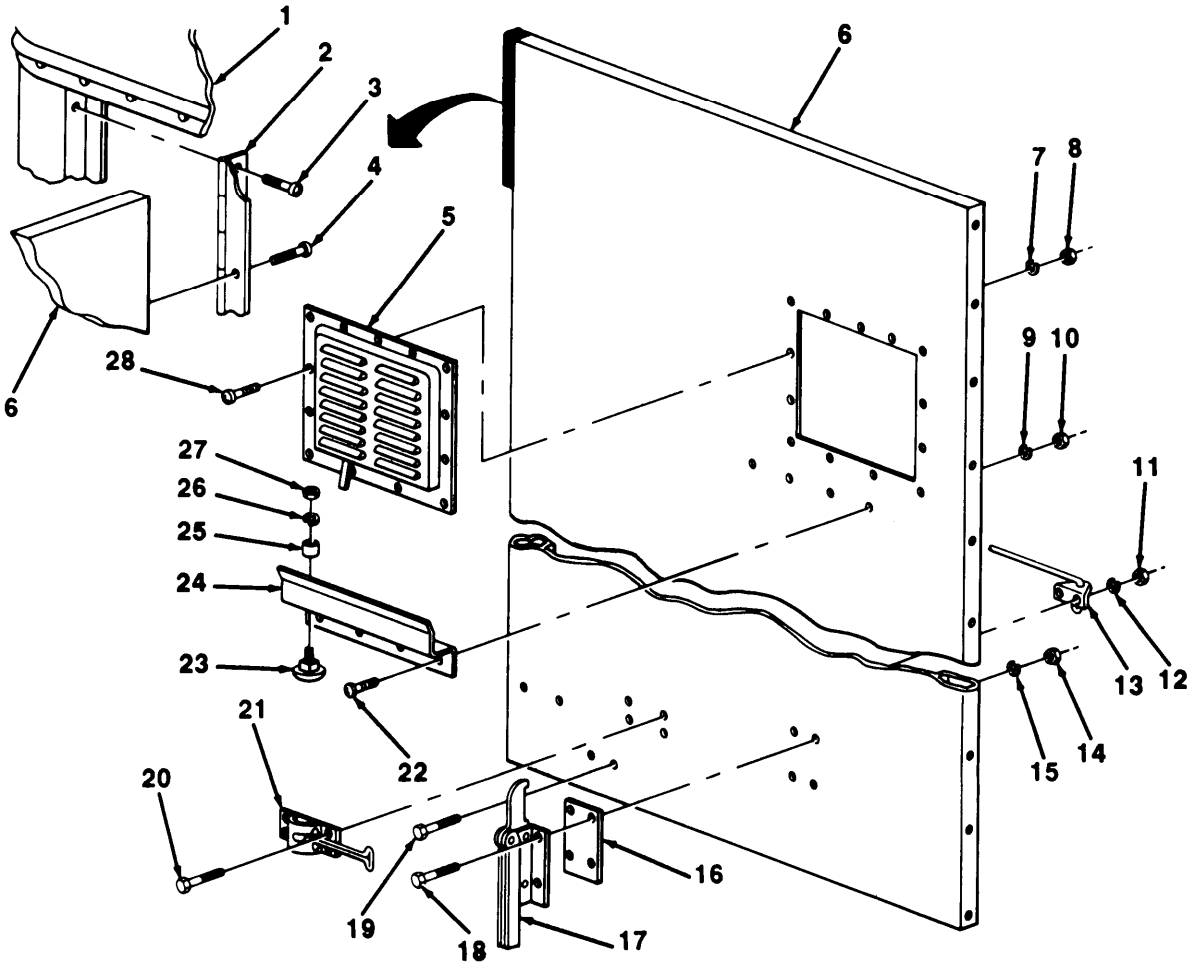

b. DISASSEMBLY

1. Remove 13 nuts (8), lockwashers (7), screws (28), and ventilator (5) from door (6). Discard lockwashers.
2. Remove two nuts (27), lockwashers (26), bumpers (25), and carriage bolts (23) from rack (24). Discard lockwashers.
3. Remove four nuts (10), lockwashers (9), screws (22), and rack (24) from door (6). Discard lockwashers.
4. Remove four screws (20) and latch (21) from door (6).

TA505325

4-62. LEFT REAR DOOR MAINTENANCE (Con't).

5. Remove four nuts (14), lockwashers (15), screws (18), clamp (17), and pad (16) from door (6). Discard lockwashers.

6. Remove two nuts (11), lockwashers (12), screws (19), and holder assembly (13). Discard lockwashers.

7. Remove two screws (36), lockwashers (35), and guide (34) from door (6). Discard lockwashers.

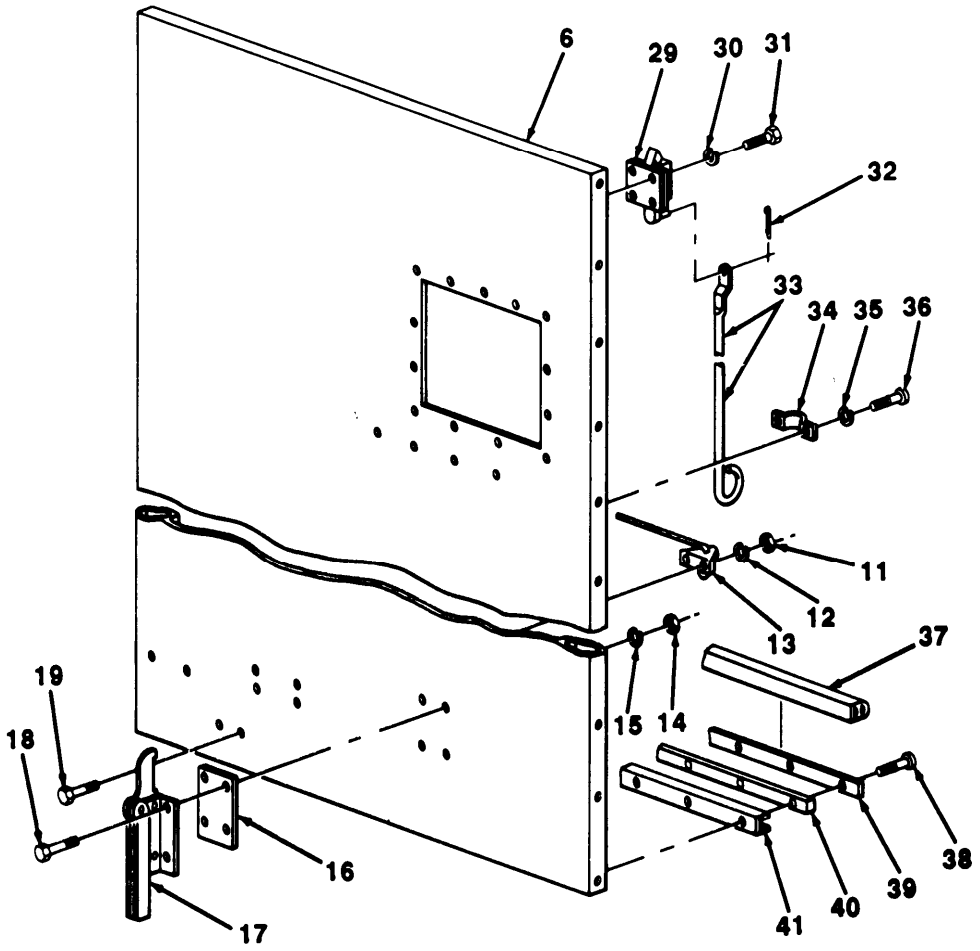

8. Remove four screws (31), lockwashers (30), and latch (29) and control rod (33) assembly from door (6). Discard lockwashers.

9. Remove cotter pin (32) and separate latch (29) and control rod (33). Discard cotter pin.

10. Remove ten screws (38), seal (37), retainer (39), spacer (40), and channel (41) from door (6). Discard seal.

11. Remove reflector (para 4-72).

TA505326

4-62. LEFt REAR DOOR MAINTENANCE (Con't).

c. ASSEMBLY

1. Install reflector (para 4-72).
2. Position channel (41), spacer (40), retainer (39), and new seal (37) on door (6) and install ten screws (38) .
3. Assemble control rod (33) to latch (29) with new cotter pin (32).
4. Install latch (29) and control rod (33) assembly on door (6) with four new lockwashers (30) and screws (31).
5. Install guide (34) on door (6) with two new lockwashers (35) and screws (36).

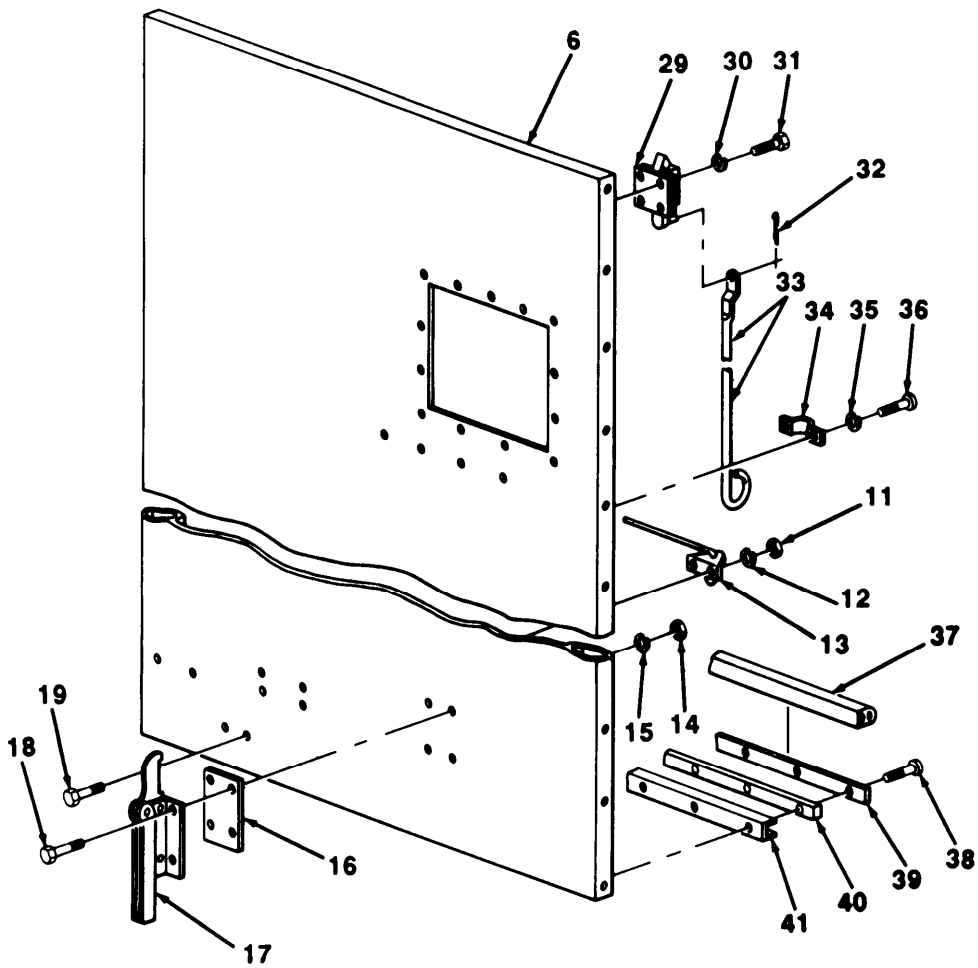

6. install holder assembly (13) on door (6) with two screws (19), new lockwashers (12), and nuts (11).
7. Install pad (16) and clamp (17) on door (6) with four screws (18), new lockwashers (15), and nuts (14).
8. Install latch (21) on door (6) with four screws (20).

TA505327

4-62. LEFT REAR DOOR MAINTENANCE (Con't).

9. Install rack (24) on door (6) with four screws (22), new lockwashers (9), and nuts (10).

10. Install two carriage bolts (23), bumpers (25), new lockwashers (26), and nuts (27) on rack (24).

11. Install ventilator (5) on door (6) with 13 screws (28), new lockwashers (7), and nuts (8).

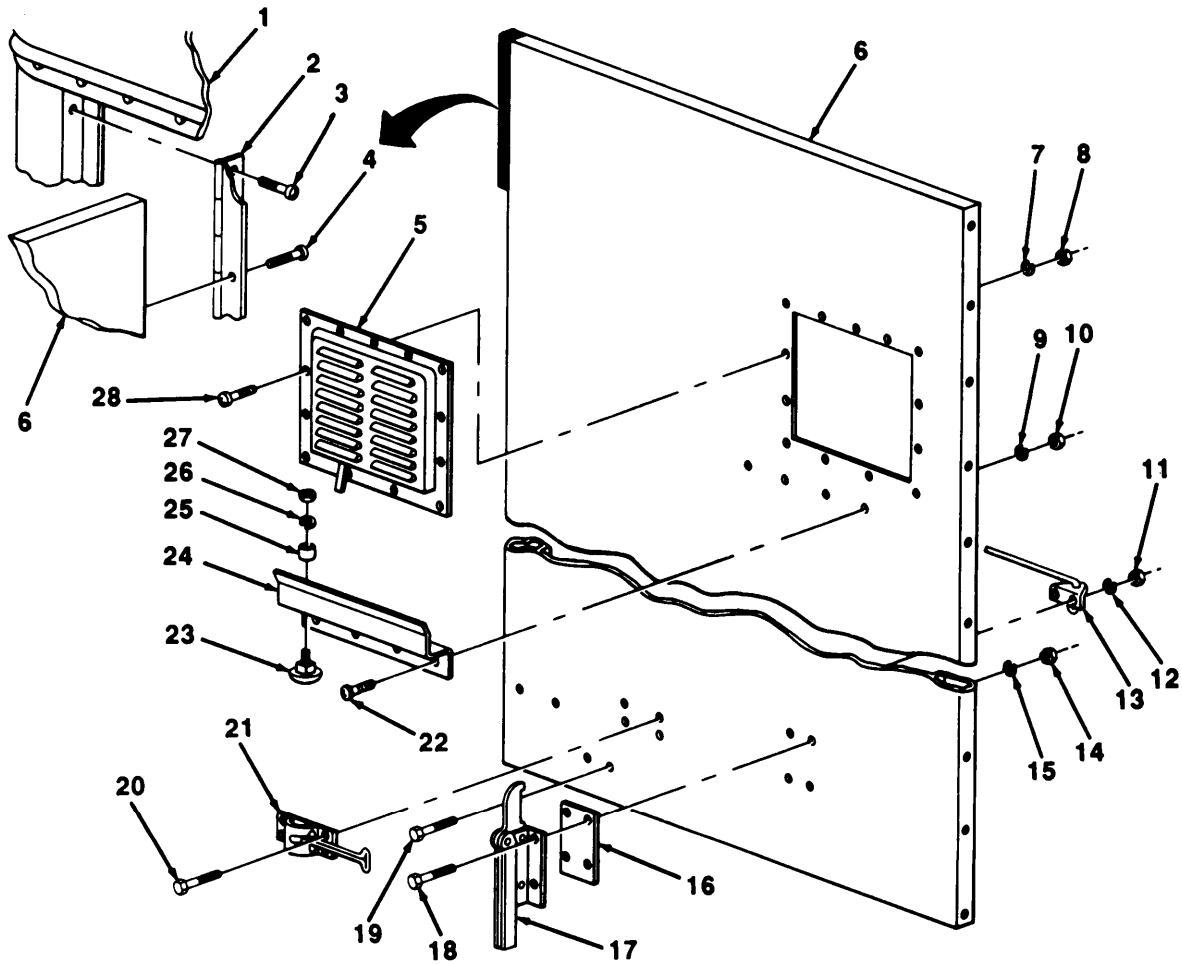

d. INSTALLATION

1. Install hinge (2) on body (1) with 14 screws (3).

NOTE

Assistance is required for step 2.

2. Position door (6) on hinge (2) and install 14 screws (4). Close door.

3. Install ladder on door (6).

TA505328

4-63. RIGHT REAR DOOR MAINTENANCE.

This Task Covers:

a. Removal
b. Disassembly
c. Assembly
d. Installation

Initial Setup:

Materials/Parts:

- One gasket
- Two cotter pins
- Two seals
- Twenty-eight lockwashers

Tools/Test Equipment:

- General mechanic's tool kit

Personnel Required: Two

a. REMOVAL

1. While assistant supports door (4), remove 14 screws (5) and door from hinge (8).
2. Remove 14 screws (6) and hinge (8) from body (7) .

b. DISASSEMBLY

1. Remove 16 nuts (3) screws (17), seal (1), and retainer plate (2) from channel (16) Discard seal.
2. Remove 13 nuts (9), lockwasher (10), screws (14), and ventilator (15) from door (4). Discard lockwashers.
3. Remove three nuts (11), screws (13), and bracket (12) from door (4).

4-63. RIGHT REAR DOOR MAINTENANCE (Con't).

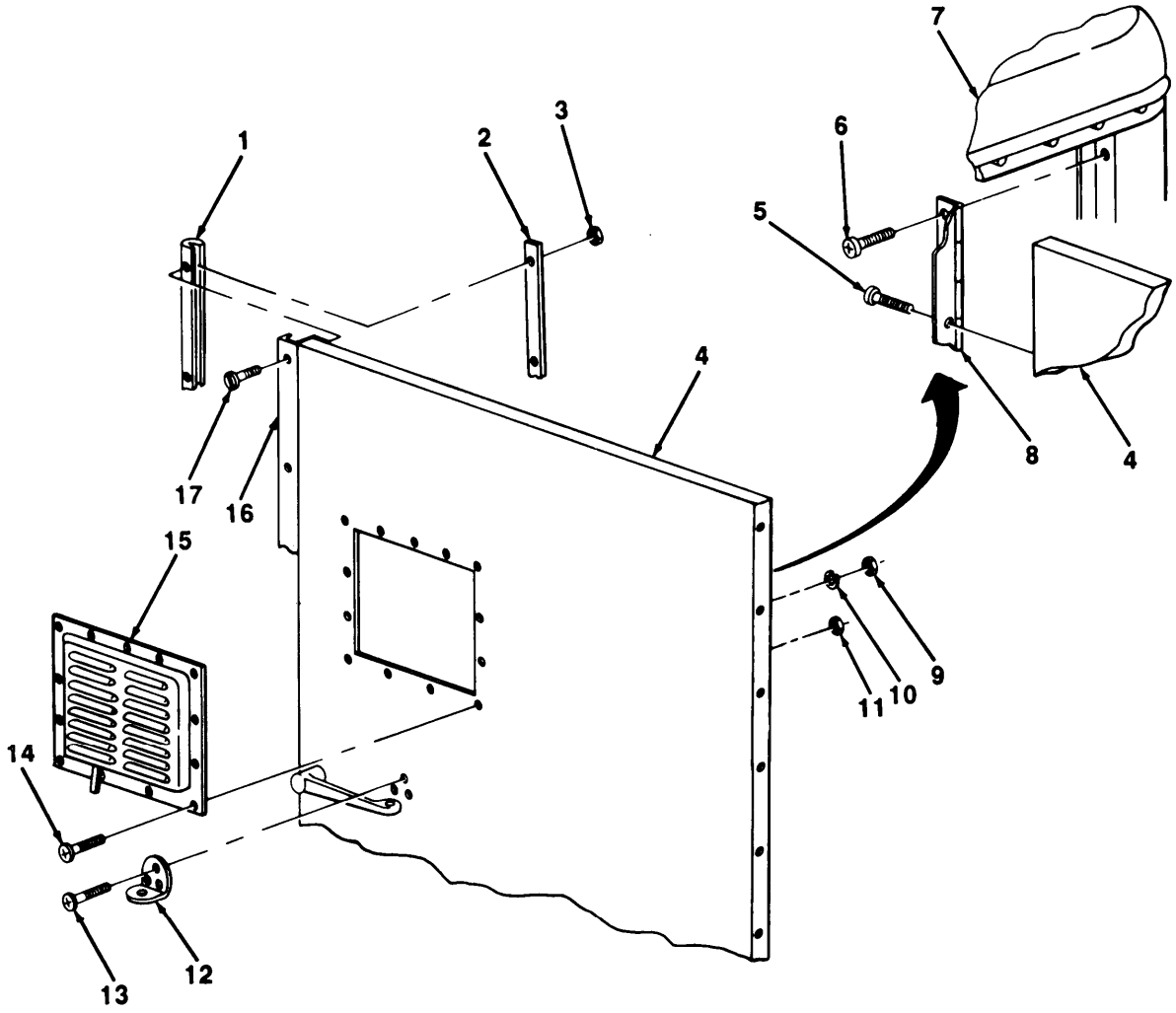

TA505329

4-63. RIGHT REAR DOOR MAINTENANCE (Con't).

4. Remove ten screws (33), seal (32), retainer (34), spacer (35), and channel (36) from door (4). Discard seal.

5. Remove four screws (42) and latch (41) from door (4).

6. Remove two nuts (37), lockwashers (38), screws (40), and holder assembly (39) from door (4). Discard lockwashers,

7. Remove nut (28), lockwasher (27), shim (49), and handle (44) with ring (45) from lock (29). Discard lockwasher.

8. Remove two screws (46), plate (47), and gasket (48) from door (4). Discard gasket.

9. Remove two cotter pins (25), pins (26), clevises (24), and rods (23) from lock (29). Discard cotter pins.

10. Remove two nuts (43), four lockwashers (31), two bolts (30), and lock (29) from door (4). Discard lockwashers.

11. Remove eight nuts (18), screws (22), lockwashers (21), upper and lower guides (20), and two shims (19) from door (4). Discard lockwashers.

12. Remove reflector (para 4-72).

c. ASSEMBLY

1. Install reflector (para 4-72).

2. Install two shims (19) and upper and lower guides (20) on door (4) with eight new lockwashers (21), screws (22), and nuts (18).

3. Install shim (49) and lock (29) on door (4) with four new lockwashers (31), two bolts (30), and nuts (43).

4. Position two rods (23) and clevises (24) on lock (29) and install two pins (26) and new cotter pins (25).

5. Install new gasket (48) and plate (47) on door (4) with two screws (46).

6. Install handle (44) with ring (45) on lock (29) with new lockwasher (27) and nut (28).

7. Install holder assembly (39) on door (4) with two screws (40), new lockwashers (38), and nuts (37).

8. Install latch (41) on door (4) with four screws (42).

9. Install retainer (34), new seal (32), spacer (35), and channel (36) on door (4) with ten screws (33).

4-63. RIGHT REAR DOOR MAINTENANCE (Con't).

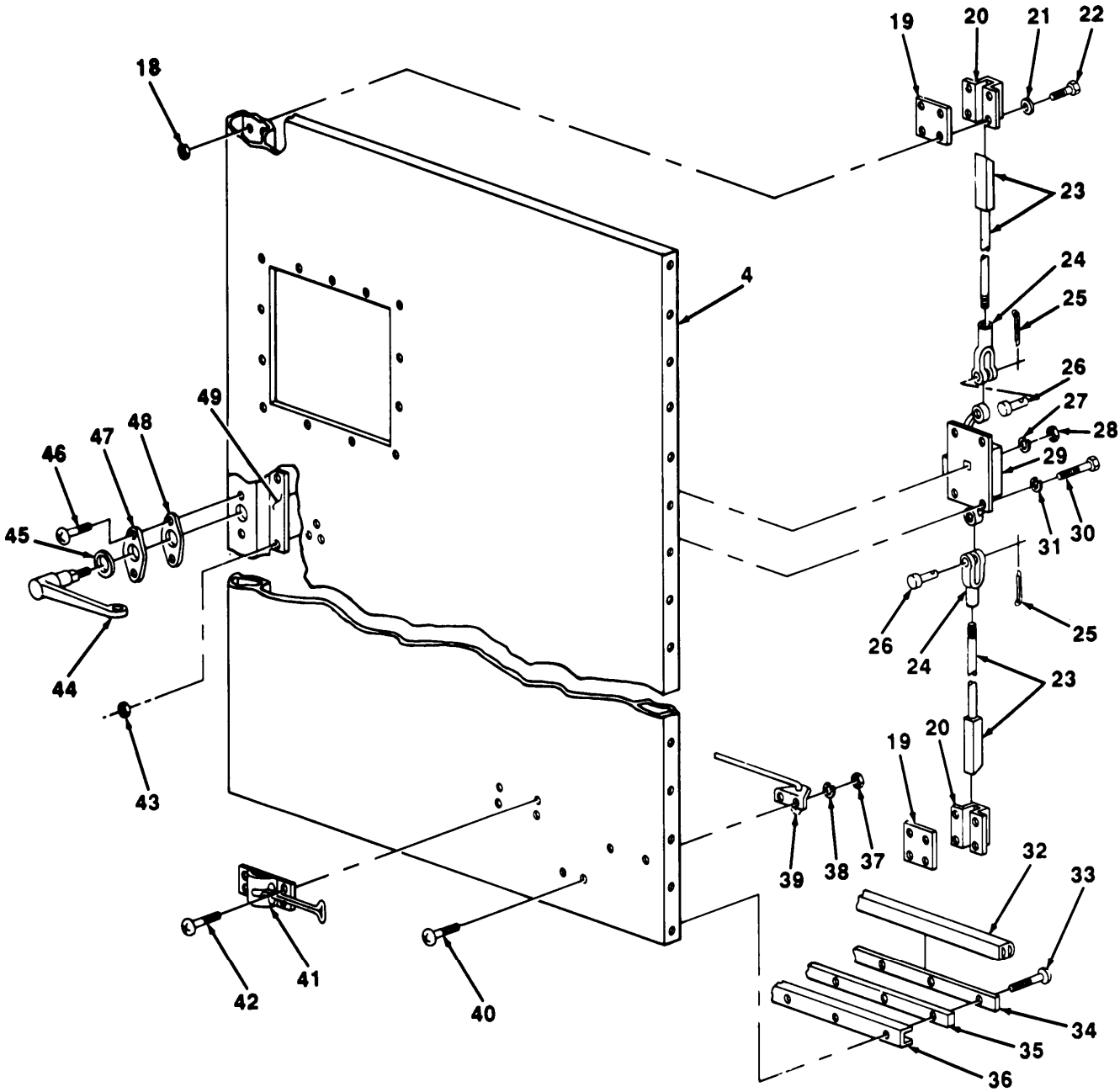

TA505330

4-63. RIGHT REAR DOOR MAINTENANCE (Con't).

10. Install bracket (12) on door (4) with three screws (13) and nuts (11).
11. Install ventilator (15) on door (4) with 13 screws (14), new lockwashers (10), and nuts (9).
12. Install new seal (1) and retainer plate (2) on channel (16) with 16 screws (17) and nuts (3).

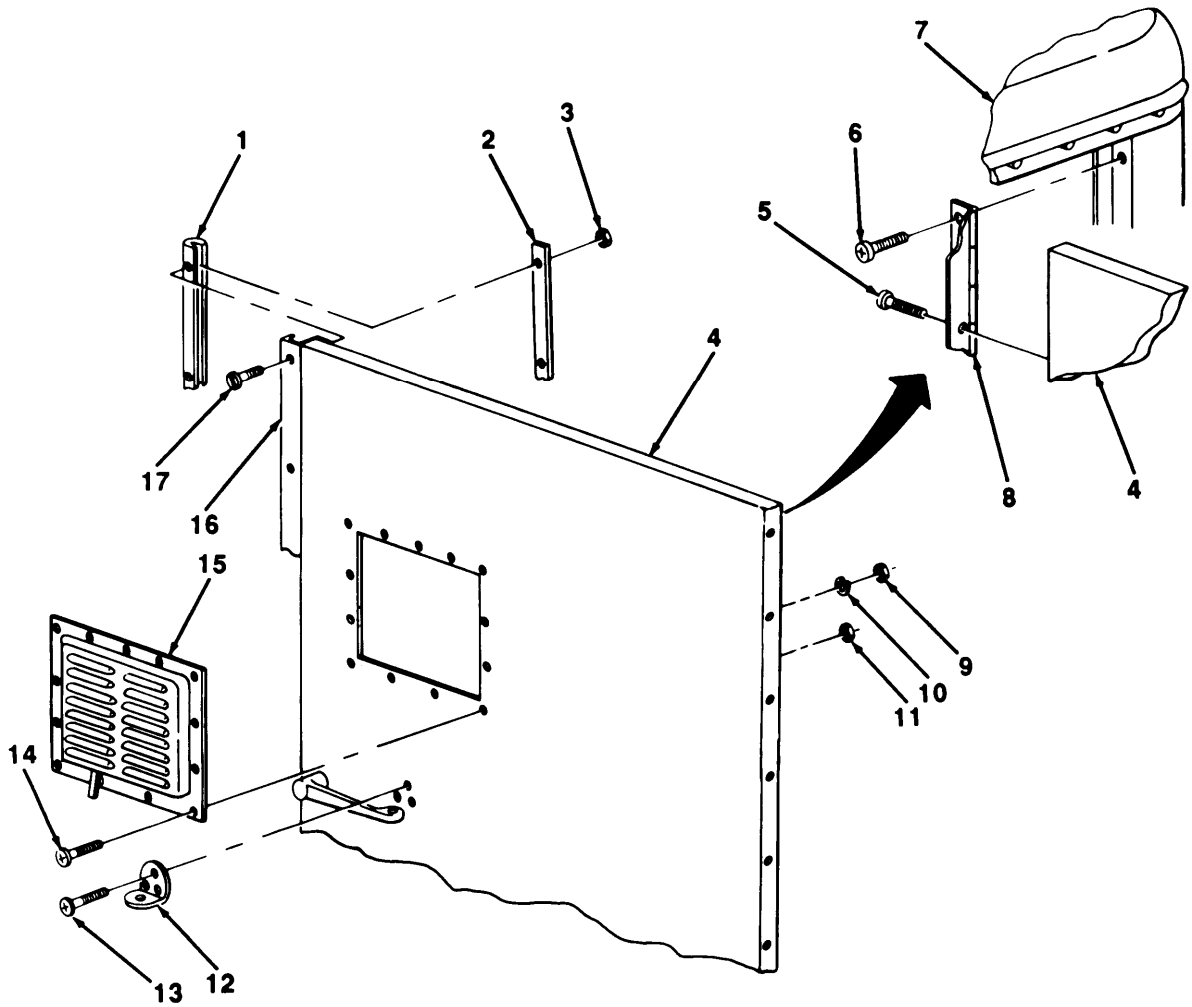

d. INSTALLATION

1. Install hinge (8) on body (7) with 14 screws (6).

NOTE

Assistance is required for step 2.

2. Position door (4) on hinge (8) and install 14 screws (5).

TA505331

4-64. SIDE DOOR MAINTENANCE.

This Task Covers:

a. Removal
b. Right Side Door Disassembly
c. Right Side Door Assembly
d. Left Side Battery Door Disassembly
e. Left Side Battery Door Assembly
f. Installation

Initial Setup:

Materials/Parts:

- **Two liners**
- Twenty lockwashers

Tools/Test Equipment:

- General mechanic's tool kit
- Drain pan

Personnel Required: Two

a. REMOVAL

NOTE

- **All side doors (6) are removed the same way. Removal of right side door is shown.**
- **Assistance is required to hold side door (6) closed during removal.**

1. Remove two nuts (17), lockwashers (16), and bolts (12) from folding arm (13) and rear corner (15). Discard lockwashers.
2. Remove two nuts (3), lockwashers (4), and bolts (7) from folding arm (9) and front corner (5). Discard lockwashers.
3. Remove 20 screws (10) from front and rear hinge (8 and 11) and floor (14).
4. Open two handles (1) on upper side panel (2) and remove side door (6).

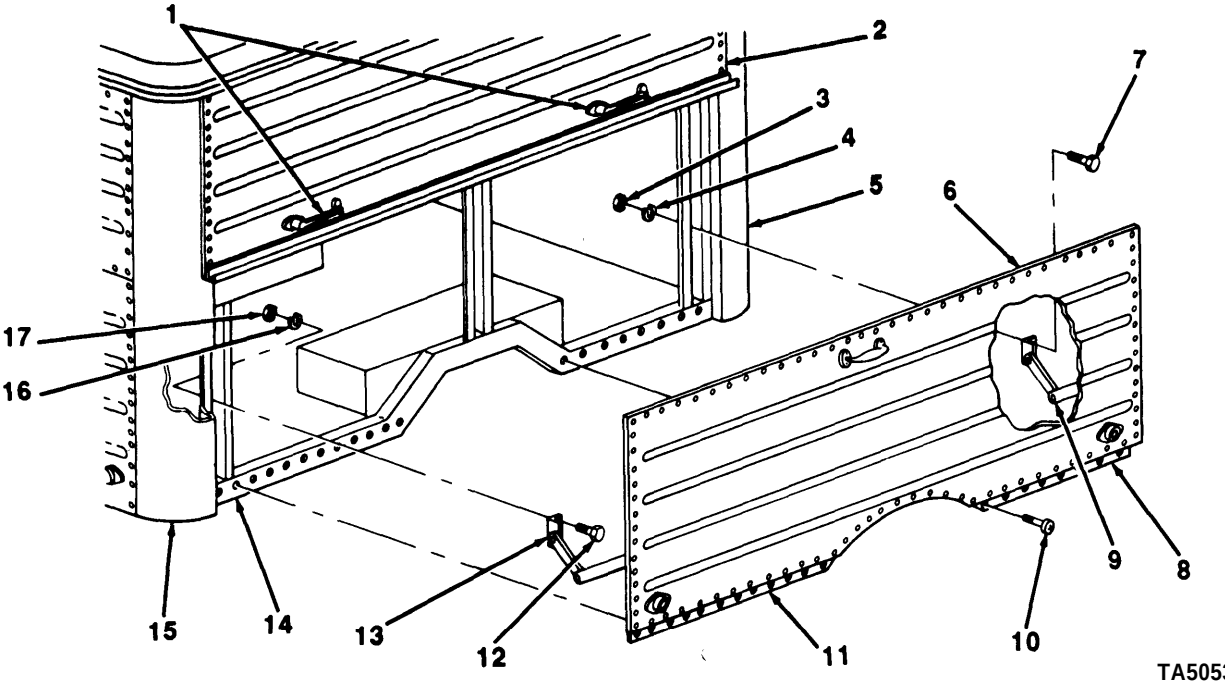

TA505332

4-64. SIDE DOOR MAINTENANCE (Con't).

b. RIGHT SIDE DOOR DISASSEMBLY

1. Remove six screws (18) and panel (19) from side door (6).
2. Remove four nuts (24), lockwashers (25), two plates (26), four bolts (29), and two folding arms (9 and 13) from side door (6). Discard lockwashers.
3. Remove 12 screws (27), rear hinge (11), and seal (28) from side door (6).
4. Remove nine screws (23), front hinge (8), and seal (22) from side door (6).
5. Remove four screws (21) and handle (20) from side door (6).

NOTE

To ensure proper adjustment for installation, position of plates (30) should be marked.

6. Mark position of plates (30). Remove four bolts (32), lockwashers (31), and plates from side door (6). Discard lockwashers.
7. Remove reflectors (para 4-72).

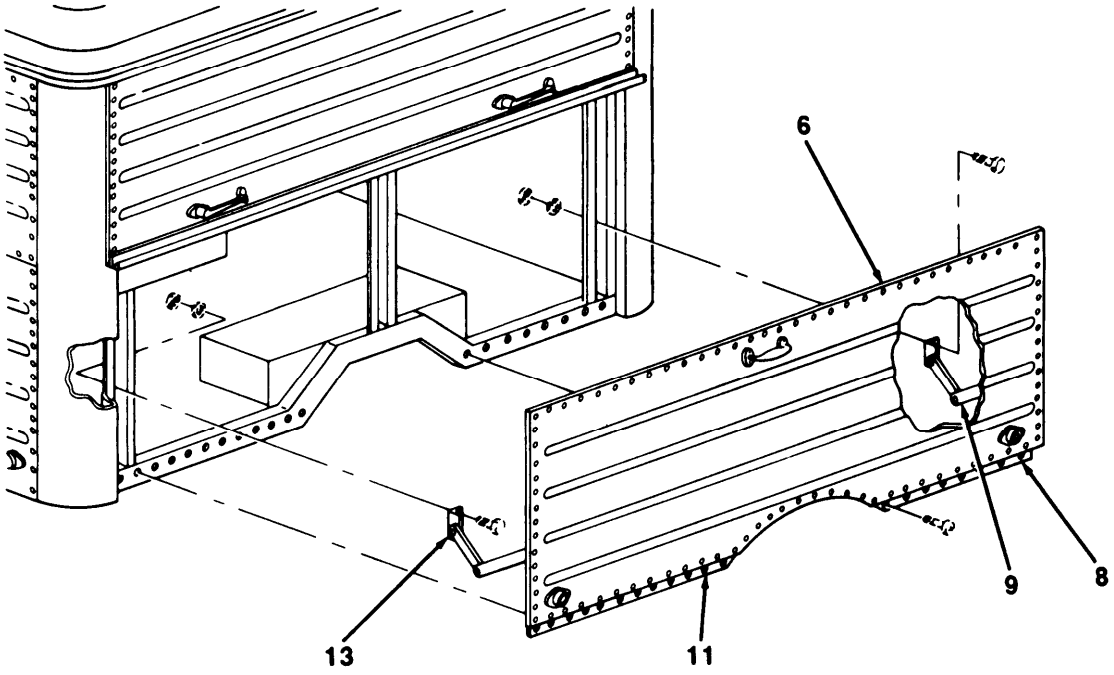

TA505333

4-64. SIDE DOOR MAINTENANCE (Con't).

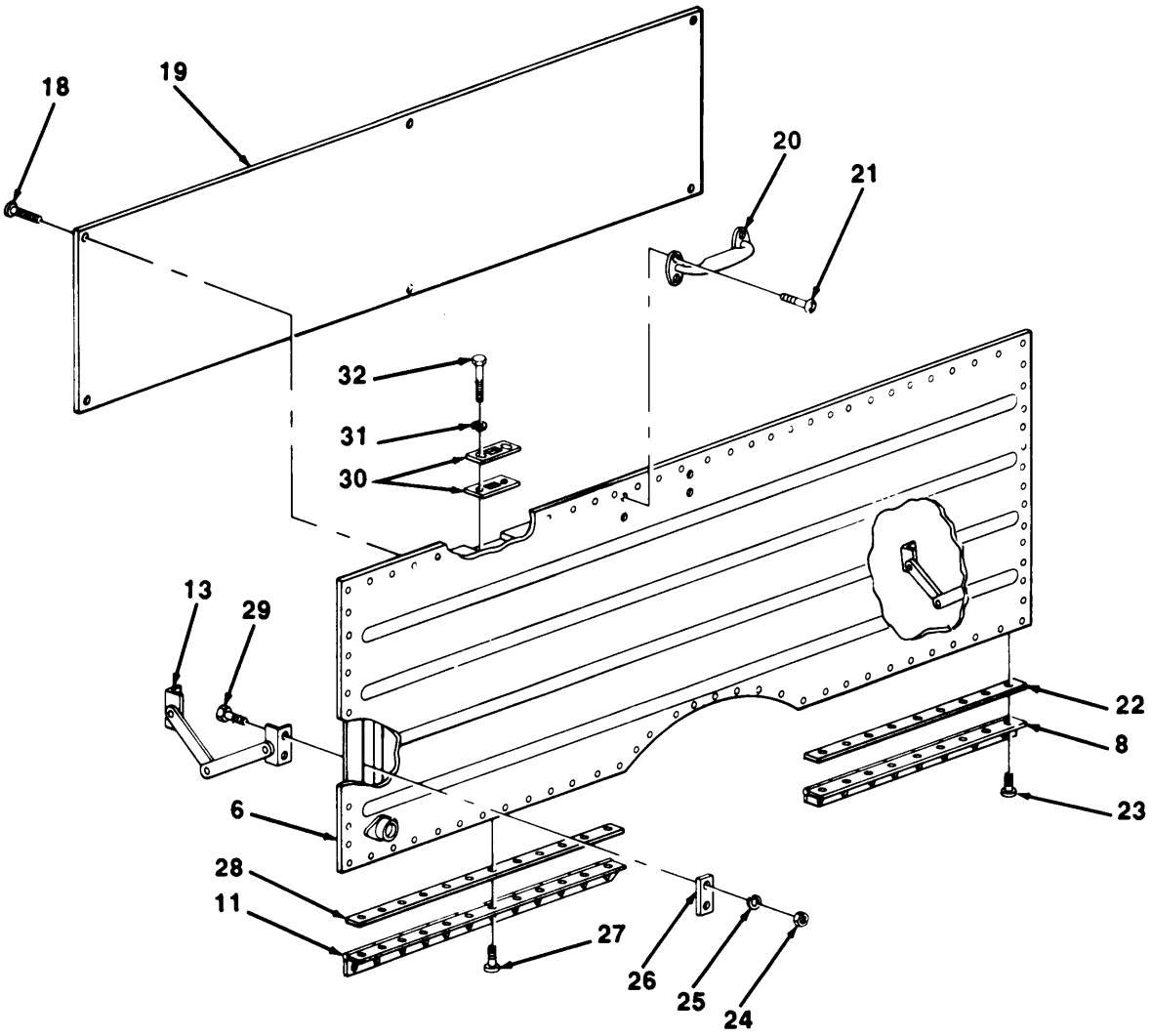

c. RIGHT SIDE DOOR ASSEMBLY

1. Install reflectors (para 4-72).
2. Position four plates (30) on side door (6) as marked, and install four new lockwashers (31) and bolts (32).
3. Install handle (20) on side door (6) with four screws (21).
4. Install seal (22) and front hinge (8) on side door (6) with nine screws (23).
5. Install seal (28) and rear hinge (11) on side door (6) with 12 screws (27).
6. Install two folding arms (9 and 13) on side door (6) with four bolts (29), two plates (26), four new lockwashers (25), and nuts (24).
7. Install panel (19) on side door (6) with six screws (18).

TA505334

4-64. SIDE DOOR MAINTENANCE (Con't).

d. LEFT SIDE BATTERY DOOR DISASSEMBLY

1. Remove eight thumbscrews (33), four bands (34), two covers (35), pans (36), and liners (37) from side door (6). Discard liners.

WARNING

Battery acid (electrolyte) is extremely dangerous. Use care when removing battery shop door caps (39). Serious injury to personnel may result if battery acid contacts skin or eyes.

2. Remove two caps (39) from side door (6) and drain any battery acid into a suitable container.
3. Remove four nuts (24), lockwashers (25), two plates (26), four bolts (29), and two folding arms (9 and 13) from side door (6). Discard lockwashers.
4. Remove 12 screws (27), rear hinge (11), and seal (28) from side door (6).
5. Remove nine screws (23), front hinge (8), and seal (22) from side door (6).
6. Remove four screws (21) and handle (20) from side door (6).

NOTE

To ınsuro proper adjustment for installation, position of plates (30) should b. marked.

7. Mark position of plates (30). Remove four bolts (32), lockwashers (31), and plates from side door (6). Discard lockwashers.
8. Remove 16 nuts (38), screws (41), and eight spring nuts (40) from side door (6).
9. Remove reflector (para 4-72),

e. LEFT SIDE BATTERY DOOR ASSEMBLY

1. Install reflector (para 4-72).
2. Install eight spring nuts (40) on side door (6) with 16 screws (41) and nuts (38).
3. Position four plates (30) on side door (6) as marked, and install four new lockwashers (31) and bolts (32).
4. Install handle (20) on side door (6) with four screws (21).
5. Install seal (22) and front hinge (8) on side door (6) with nine screws (23).
6. Install seal (28) and rear hinge (11) on side door (6) with 12 screws (27).
7. Install two folding arms (9 and 13) on side door (6) with four bolts (29), two plates (26), four new lockwashers (25), and nuts (24).
8. install two caps (39) on side door (6).
9. Position two new liners (37), pans (36), covers (35), and four bands (34) on side door (6) and install eight thumbscrews (33).

4-64. SIDE DOOR MAINTENANCE (Con't).

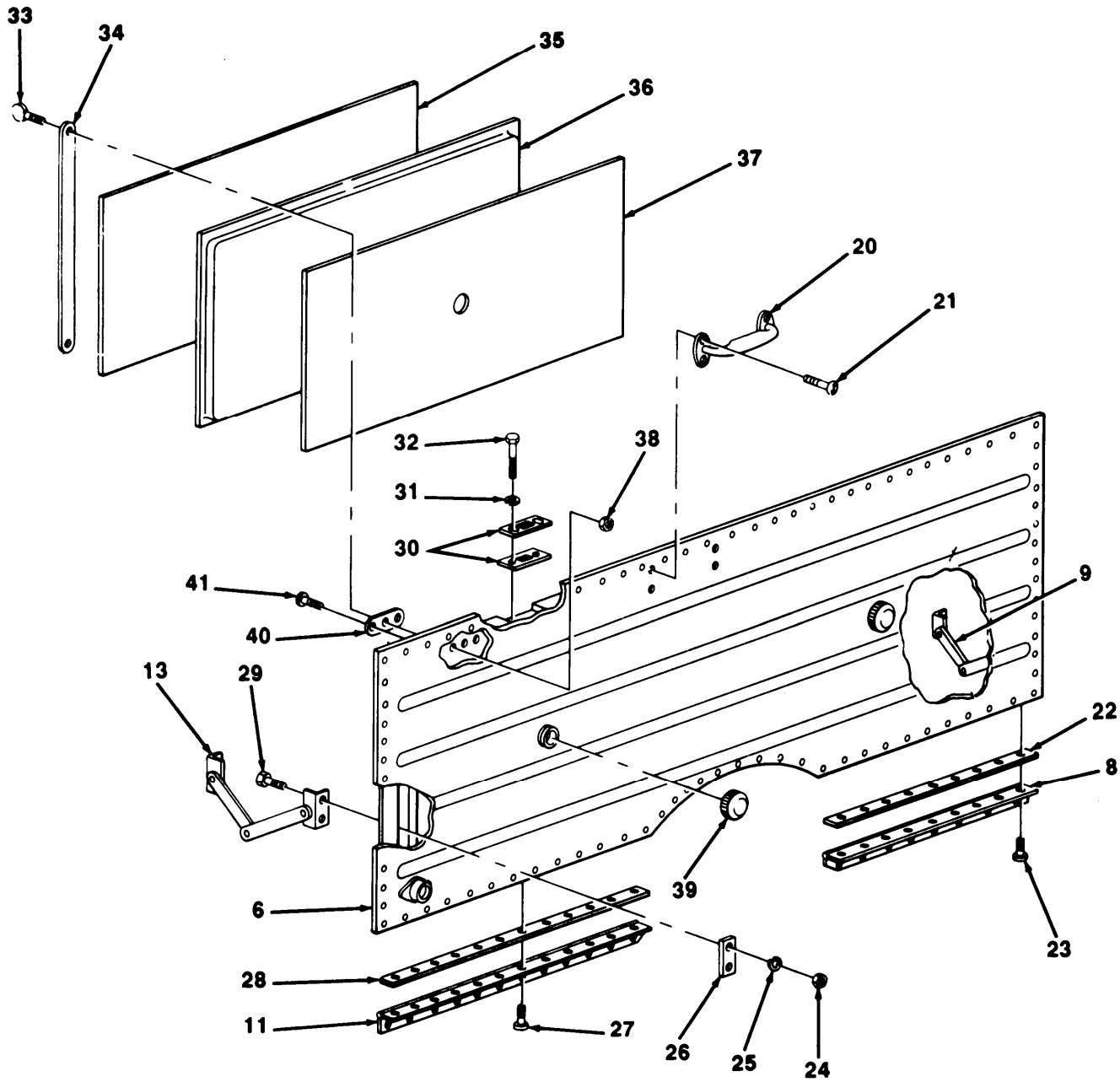

TA505335

4-64. SIDE DOOR MAINTENANCE (Con't).

f. INSTALLATION

NOTE

- **All side doors** (8) **are installed the same way. Installation of right side door** is **shown.**
- **Assistance is required to hold side door (6) closed for Installation.**

1. Position side door (6) on upper side panel (2) and floor (14) in closed position. Close two bandies (1).
2. install front and rear hinge (8 and 11) on floor (14) with 20 screws (10).
3. install folding arm (9) on front corner (5) with two bolts (7), new lockwashers (4), and nuts (3).
4. install folding arm (13) on rear corner (15) with two bolts (12), new lockwashers (16), and nuts (17).

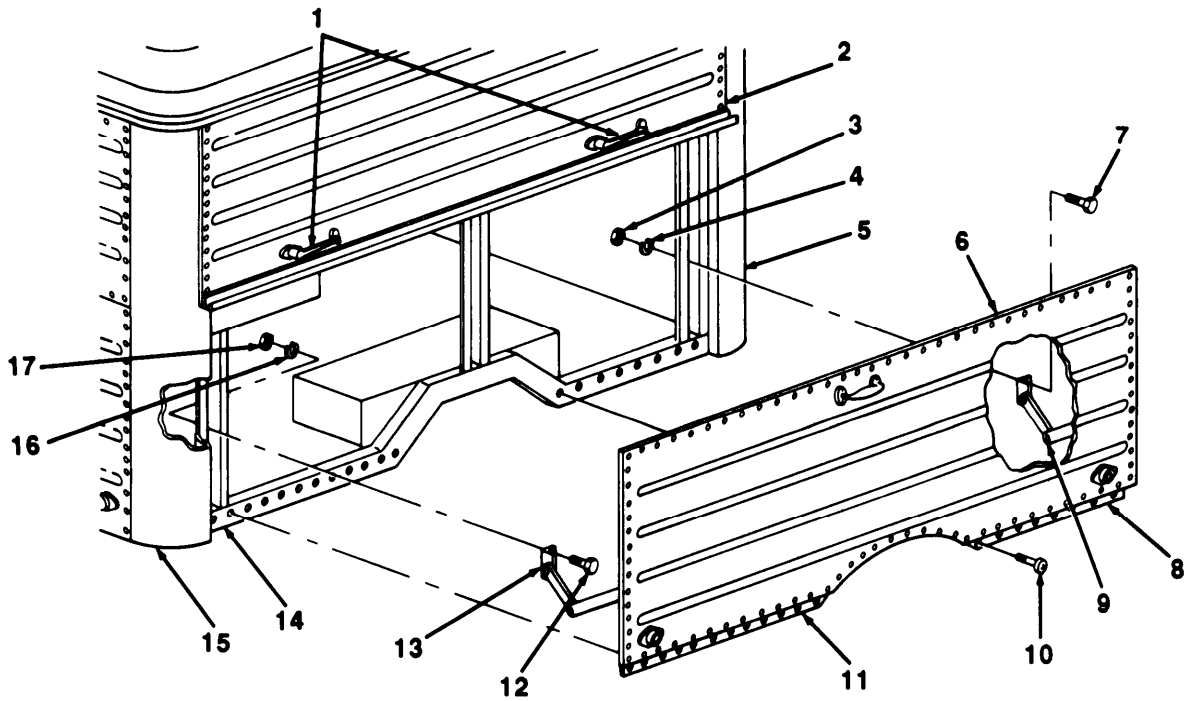

TA505336

4-65. REAR DOOR SEAL AND BUMPER REPLACEMENT.

This Task Covers:

a. **Removal**

b. Installation

Initial Setup:

Equipment Conditions:

- Doors open.

Tools/Test Equipment:

- General mechanic's tool kit

Materials/Parts:

- One seal
- **Thirteen lockwashers**

a. REMOVAL

NOTE

There are four rear door seals and two door bumpers with clips. This procedure is typical for all.

1. Remove four nuts (6), lockwashers (5), screws (1), capping (2), filler (3), seal (8), and retainer (7) from rear corner (4). Discard lockwashers.

2. Remove nine screws (9), seal (8), and retainer (7) from filler (3). Discard seal.

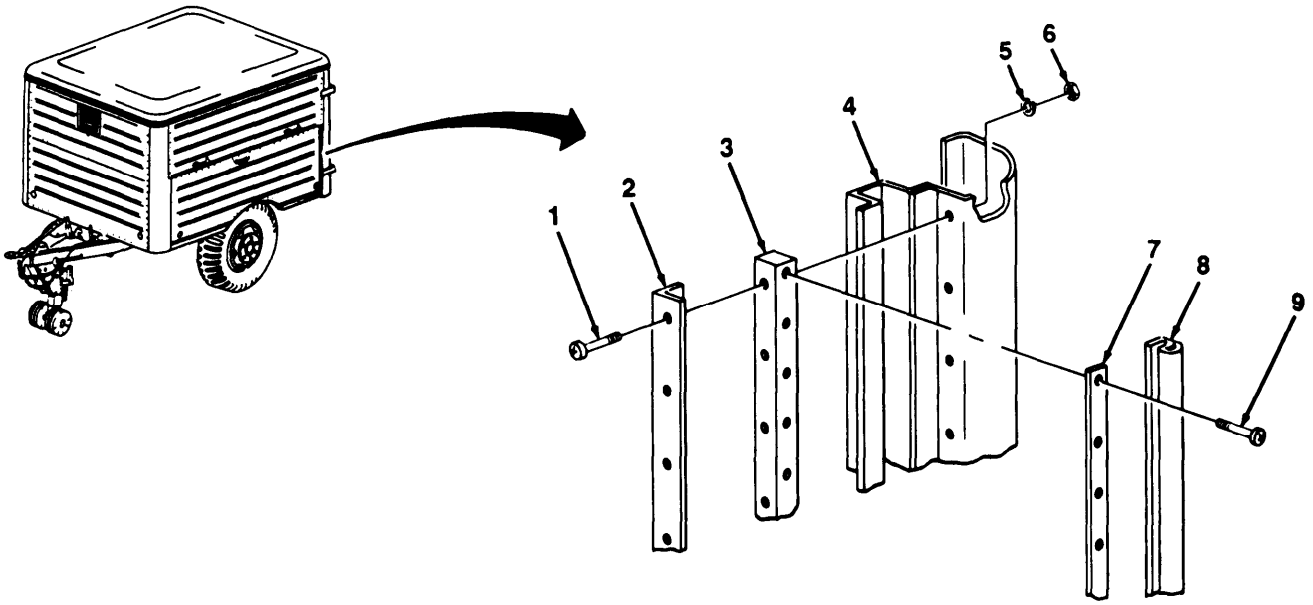

TA505337

4-65. REAR DOOR SEAL AND BUMPER REPLACEMENT (Con't).

3. Remove four nuts (16), lockwashers (15), bolts (13), and bracket (14) from rear corner (4). Discard lockwashers.

4. Remove nut (21), lockwasher (22), screw (10), flatwasher (11), and bumper (12) from bracket (14). Discard lockwasher.

NOTE

Step 5 applies only to lower bumpers,

5. Remove four nuts (20), lockwashers (19), screws (18), and clip (17) from bracket (14). Discard lockwashers.

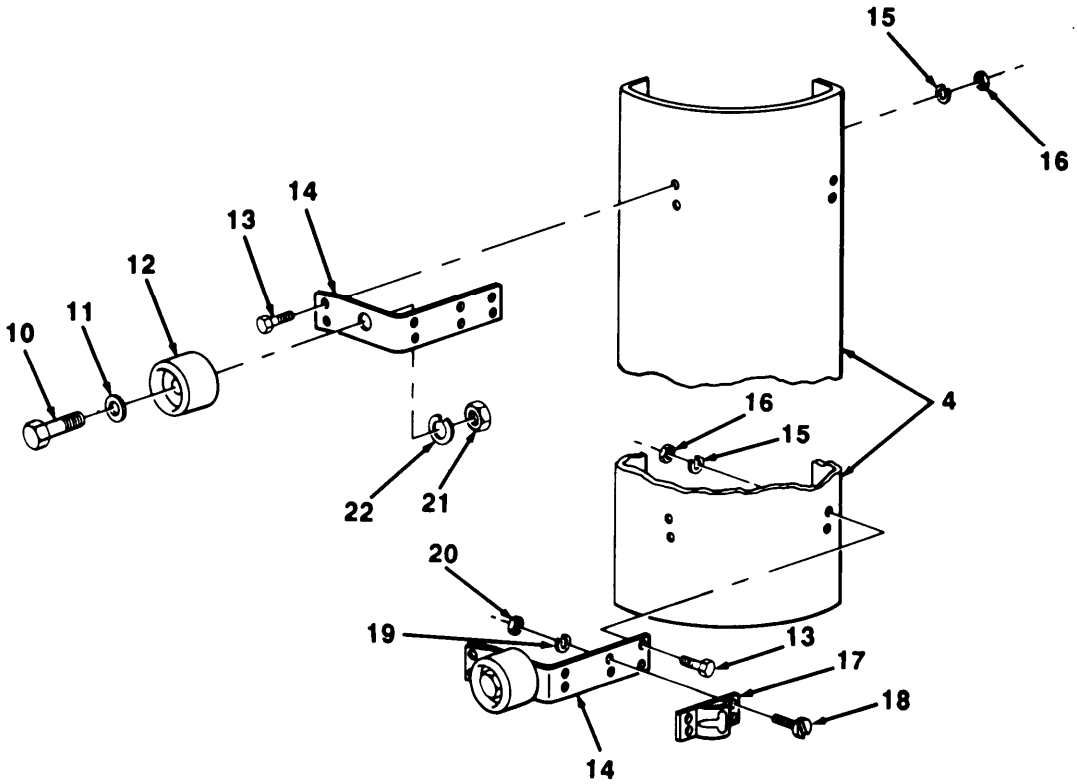

b. INSTALLATION

NOTE

Step 1 applies only to lower bumpers.

1. Install clip (17) on bracket (14) with four screws (18), new lockwashers (19), and nuts (20).

2. Install bumper (12) on bracket (14) with screw (10), flatwasher (11), new lockwasher (22), and nut (21).

3. Install bracket (14) on rear corner (4) with four bolts (13), new lockwashers (15), and nuts (16).

TA505338

4-65. REAR DOOR SEAL AND BUMPER REPLACEMENT (Con't).

4. Position new seal (8) and retainer (7) on filler (3) and install nine screws (9).

5. Install seal (8), retainer (7), filler (3), and capping (2) on rear corner (4) with four screws (1), new lockwashers (5), and nuts (6).

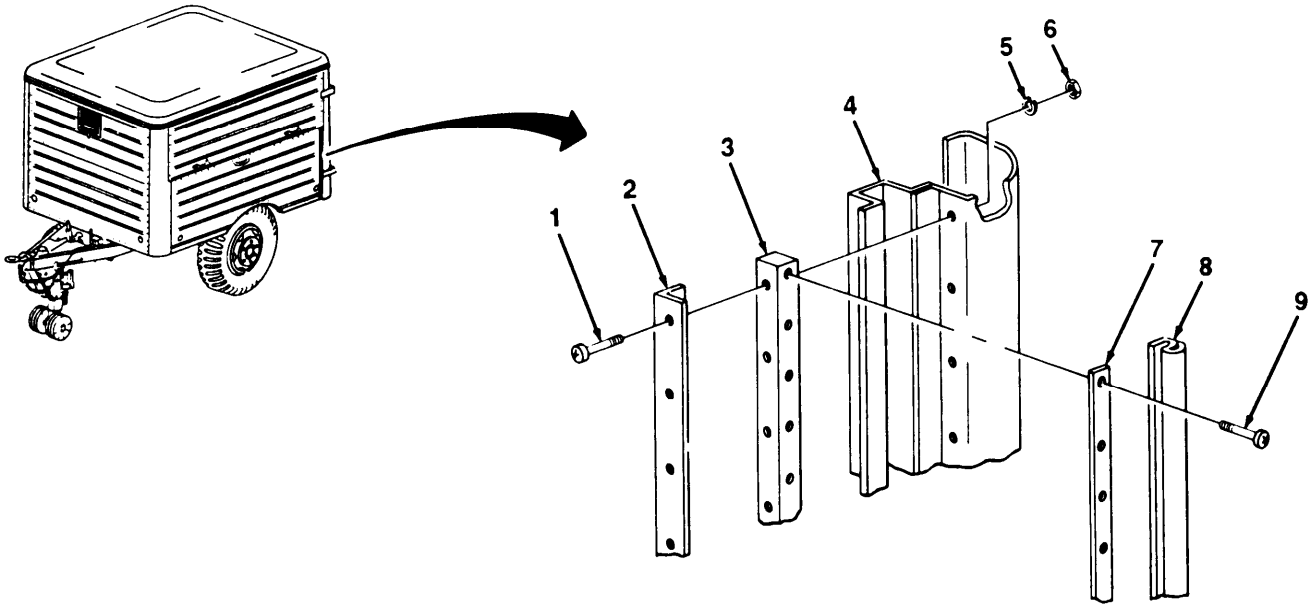

TA505339

4-66. SIDE DOOR UPPER SEAL AND MOLDING REPLACEMENT.

This Task Covers:

a. Removal

b. Installation

Initial Setup:

Equipment Conditions:

- Side door open,

Tools/Test Equipment:

- General mechanic's tool kit

Materials/Parts:

- One upper seal

a. REMOVAL

1. Remove 28 screws (6), retainer (3), and upper seal (2) from panel (1). Discard upper seal.
2. Remove 28 screws (5) and molding *(4)* from panel (1).

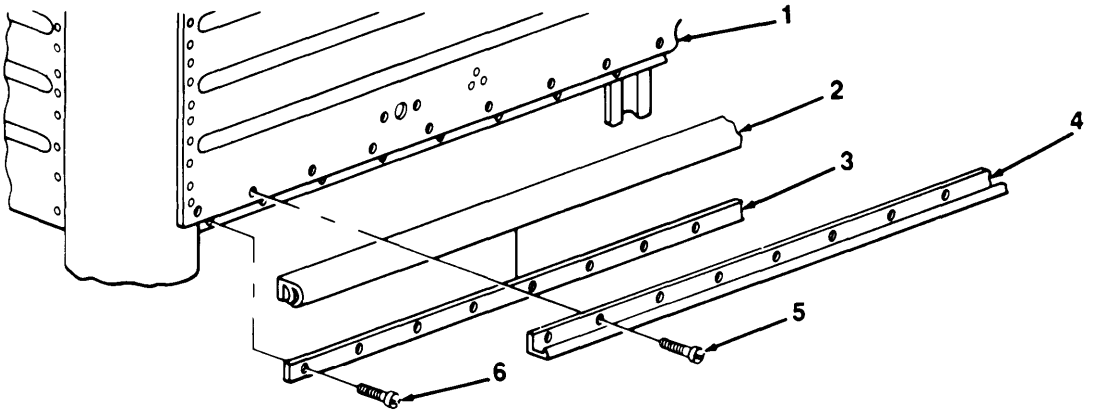

b. INSTALLATION

1. Install molding (4) on panel (1) with 28 screws (5).
2. Install new upper seal (2) and retainer (3) on panel (1) with 28 screws (6).

TA505340

4-67. SIDE DOOR LATCH REPLACEMENT.

This Task Covers:

a. Removal

b. Installation

Initial Setup:

Equipment Conditions:

- Side door open.

Tools/Test Equipment:

- General mechanic's tool kit

Materials/Parts:

- Two gaskets
- Eight lockwashers

a. REMOVAL

NOTE

All four side door latches are removed the same way. This procedure covers one latch.

1. Remove nut (1), lockwasher (2), and handle (11) with gasket (10) from lock (15). Discard lockwasher and gasket.
2. Remove two screws (12), plate (9), and gasket (8) from panel (5). Discard gasket.
3. Remove four nuts (17), lockwashers (16), screws (13), lock (15), and spacer (14) from panel (5). Discard lockwashers.
4. Remove three nuts (3), lockwashers (4), screws (7), and bracket (6) from panel (5). Discard lockwashers.

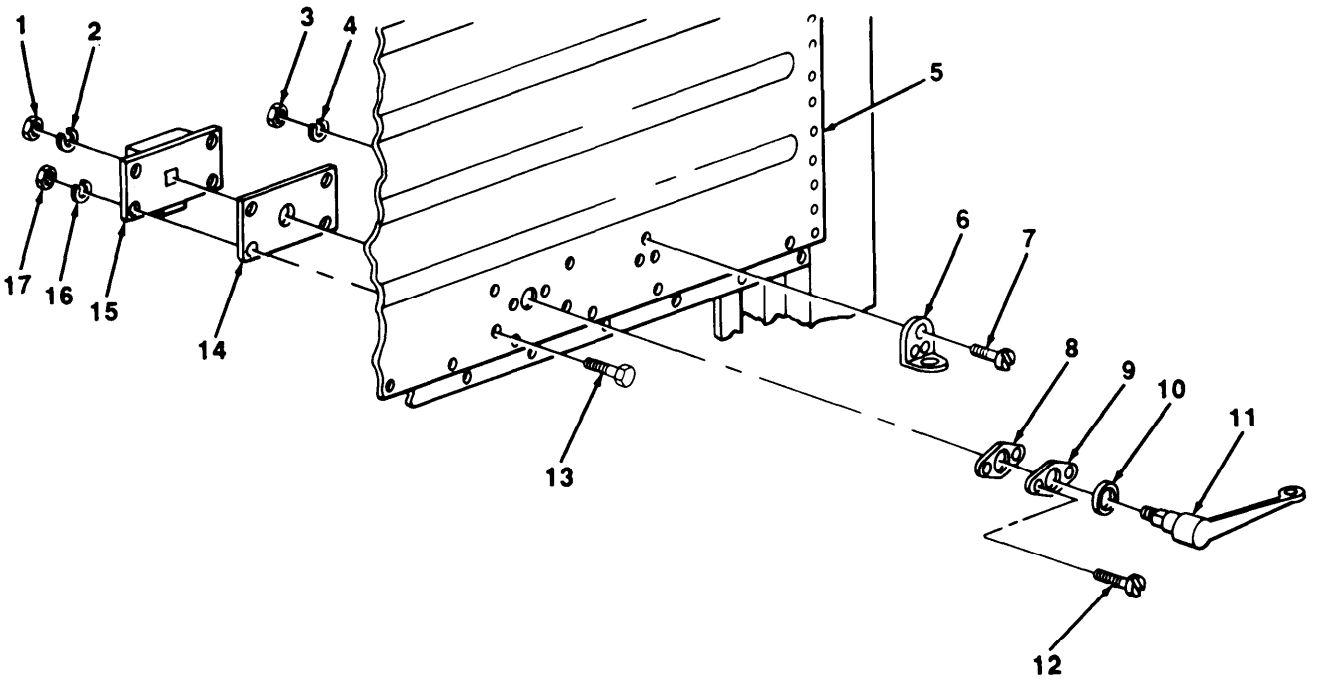

TA505341

4-67. SIDE DOOR LATCH REPLACEMENT (Con't).

b. INSTALLATION

NOTE

All four side door latches are installed the same way. This procedure covers one latch.

1. Install bracket (6) on panel (5) with three screws (7), new lockwashers (4), and nuts (3).
2. Install spacer (14) and lock (15) on panel (5) with four screws (13), new lockwashers (1 6), and nuts (17).
3. Install new gasket (8) and plate (9) on panel (5) with two screws (12).
4. Install new gasket (10) and handle (11) on lock (15) with new lockwasher (2) and nut (1).

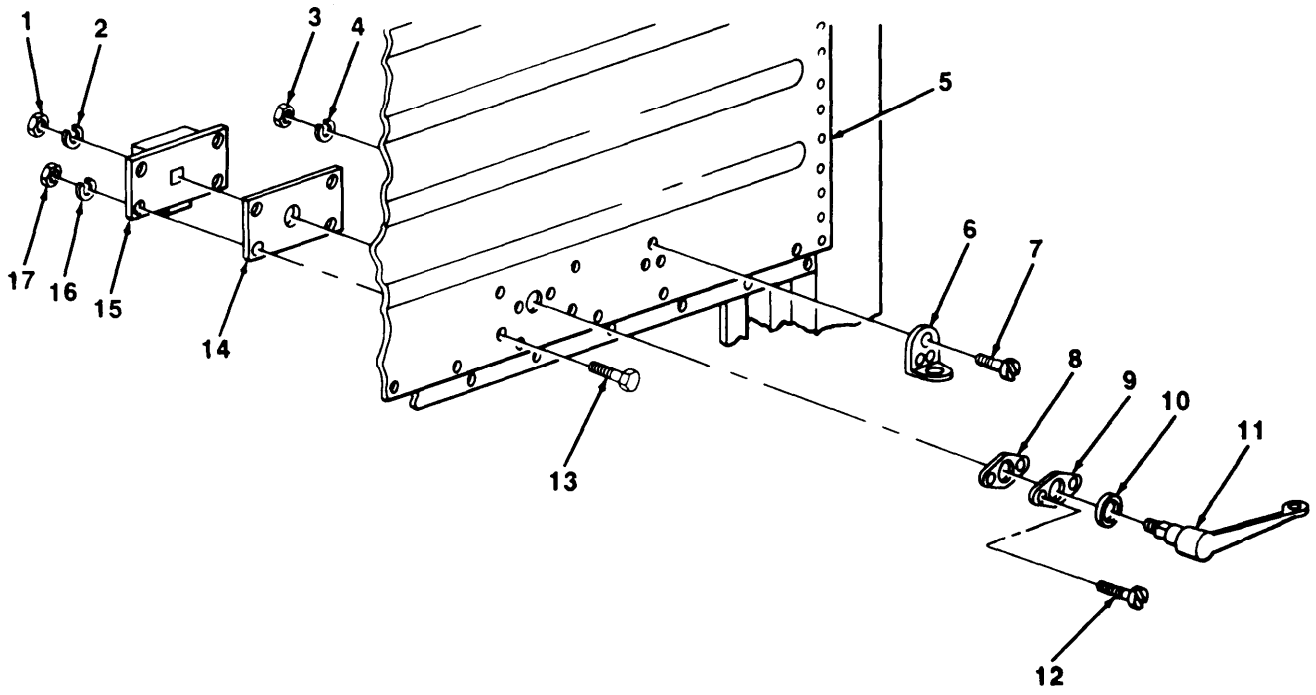

TA505342

4-68. FRONT VENTILATOR REPLACEMENT.

This Task Covers:

a. Removal

b. Installation

Initial Setup:

Materials/Parts:

- Thirteen lockwashers

Personnel Required: Two

Tools/Test Equipment:

- General mechanic's tool kit

a. REMOVAL

Remove 13 nuts (2), lockwashers (3), screws (5), and front ventilator (1) from front wall (4). Discard **lockwashers.**

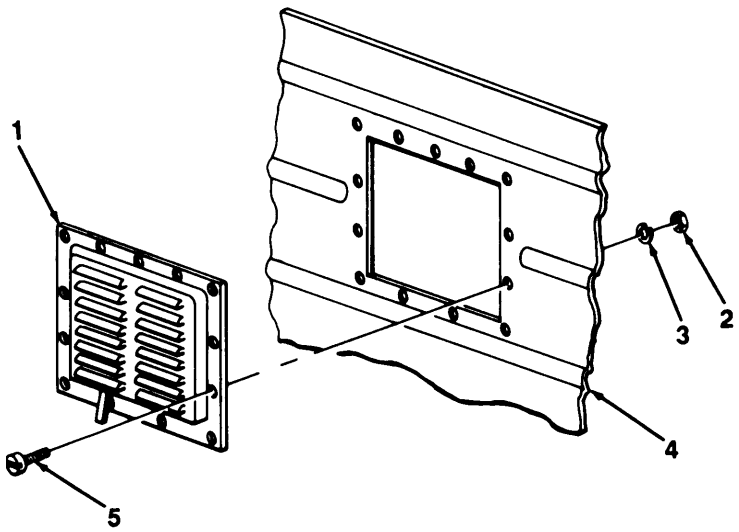

b. INSTALLATION

Position front ventilator (1) on front wall (4) and install 13 screws (5), new lockwashers (3), and nuts (2).

TA505343

4-69. 110-VOLT ELECTRICAL SYSTEM MAINTENANCE.

This Task Covers:

a. Removal

b. Installation

Initial Setup:

Equipment Conditions:

- Auxillary power cable disconnected (para 2-15).

Tools/Test Equipment:

- General mechanic's tool kit

Materials/Parts:

- Marker tags (item 16, Appendix E)
- One gasket
- Eight lockwashers

a. **REMOVAL**

WARNING

Auxillary power cable must be disconnected from outside housing before performing any work on 110-voit electrical system. Failure to folllw this warning may result in injury or death.

NOTE

During removal, circuit breaker box (8) should be visually inspected for burnt wires, arcing, damaged circuit breakers, and loose connections that may cause damage to equipment. Wires should be visually inspected for damaged or broken insulation that may cause shorting,

1. Remove four screws (17) and cover (16) from junction box (11).
2. Loosen four screws (14) at two receptacles (15). Tag two wire leads (3), ground wire lead (5), and jumper wire (9).
3. Disconnect two wire leads (3), ground wire lead (5), and jumper wire (9) from two receptacles (15).
4. Remove two receptacles (15) from junction box (11).
5. Remove connector (10) from conduit (4) and junction box (11).
6. Remove two screws (13) and junction box (11) from wall (12).
7. Remove four screws (1) from two hinges (2) and box (8).
8. Remove two setscrews (20), flatwashers (19), and cover (18) from box (8).
9. Loosen screw (6) which secures ground wire lead (5) to terminal board (7). Tag ground wire lead (5) and two wire leads (3).
10. Remove ground wire lead (5) from terminal board (7).

4-69. 110-VOLT ELECTRICAL SYSTEM MAINTENANCE (Con't).

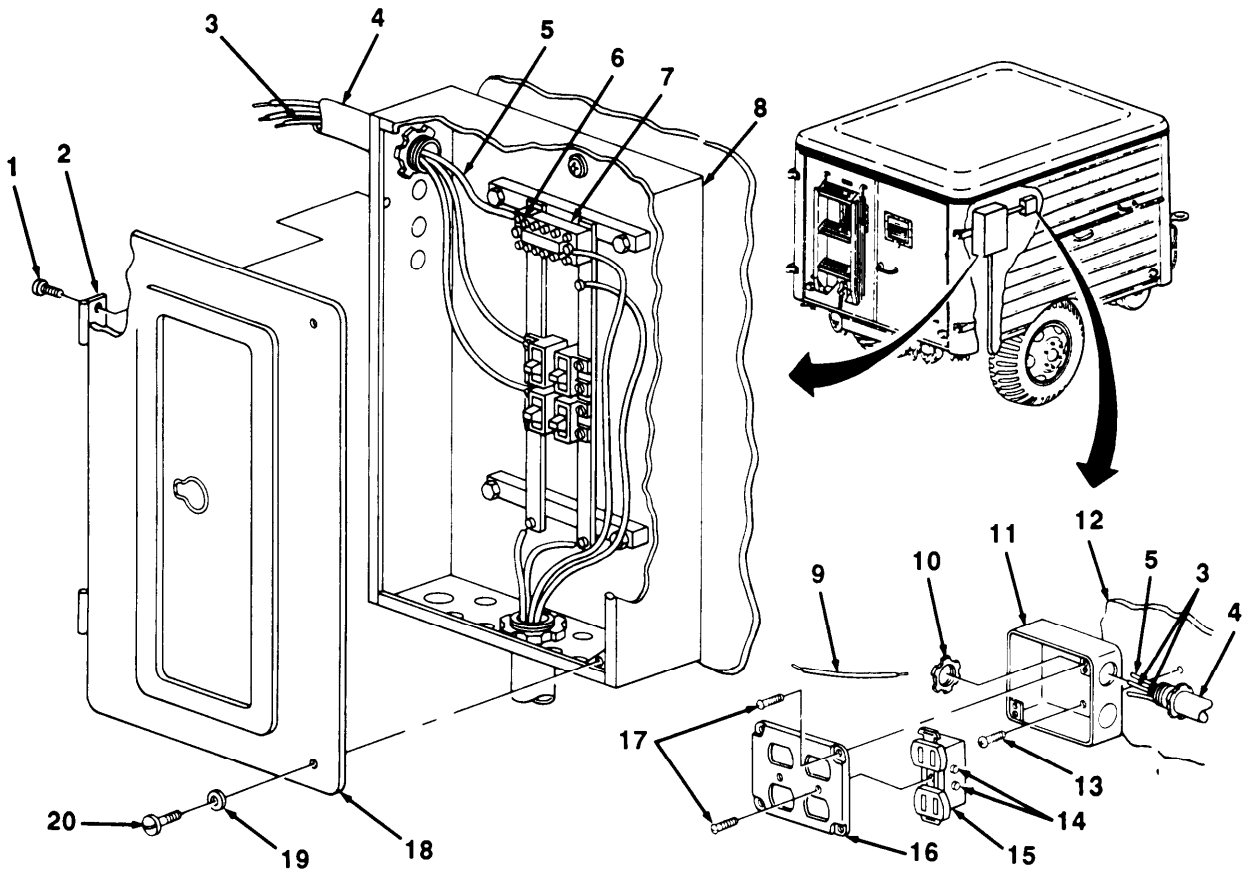

TA505344

4-69. 110-VOLT ELECTRICAL SYSTEM MAINTENANCE (Con't).

11. Loosen two screws (30) and remove two wire leads (3) from two circuit breakers (31),
12. Remove four screws (29) and two circuit breakers (31) from bus bar (32). Repeat for two spare circuit breakers (25).
13. Remove ground wire lead (5) and two wire leads (3) from box (8).
14. Remove connector (33) and conduit (4) from box (8).
15. Loosen three screws (24) and screw (23) and tag three inlet wire leads (27) and ground wire lead (26).
16. Disconnect three inlet wire leads (27) from bus bars (32) and ground wire lead (26) from terminal board (7).

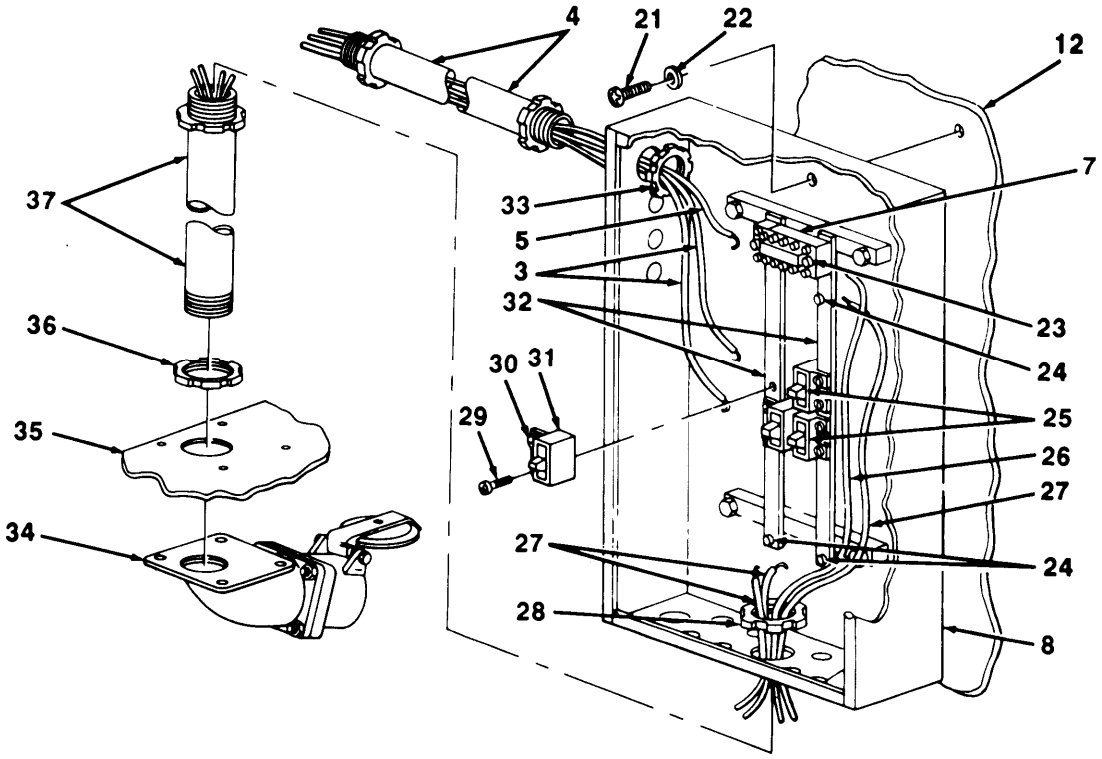

17. Remove connector (28) from conduit (37) and box (8).
18. Remove two screws (21), flatwashers (22), and box (8) from wall (12).
19. Remove connector (36) and conduit (37) from elbow (34) and floor (35).

TA505345

4-69. 110-VOLT ELECTRICAL SYSTEM MAINTENANCE (Con't).

20. Remove four nuts (43), lockwashers (42), screws (39), insert housing (38), and gasket (41) from elbow (34). Remove insert (40). Discard lockwashers and gasket.

NOTE

For repair of wire leads, refer to Paragraph 4-71.

21. Tag three inlet wire leads (27) and ground wire lead (26) and remove from insert **(40).**

22. Remove four nuts (46), lockwashers (45), screws (44), and elbow (34) from floor (35). Discard lockwashers.

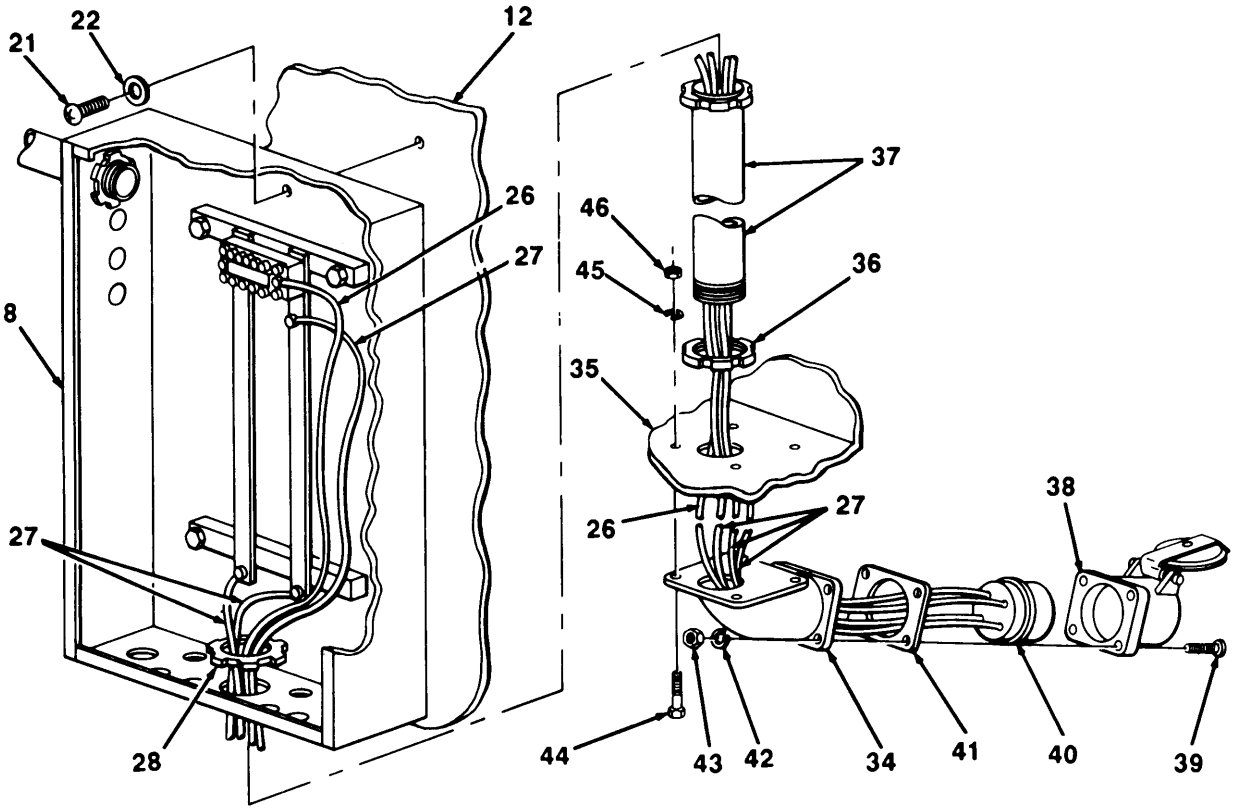

TA505346

4-69. 110-VOLT ELECTRICAL SYSTEM MAINTENANCE (Con't).

b. INSTALLATION

NOTE

- **To test receptacles and circuit broakers, refer to paragraph 4-70.**
- **Ensure that all work loads and ground wire leads are installed as tagged.**
- **Instructions for manufacturing wire leads can be found in Appendix G.**

1. Install elbow (34) on floor (35) and with four screws (44), new lockwashers (45), and nuts (46).
2. Install three inlet wire leads (27) and ground wire lead (26) in insert (40). Install insert in insert housing (38).
3. Install new gasket (41) and insert housing (38) on elbow (34) with four screws (39), new lockwashers (42), and nuts (43).
4. Install conduit (37) on elbow (34) with connector (36).
5. Position box (8) on wall (12) alining hole in box with conduit (37). Install two flatwashers (22) and screws (21).
6. Install conduit (37) on box (8) with connector (28)

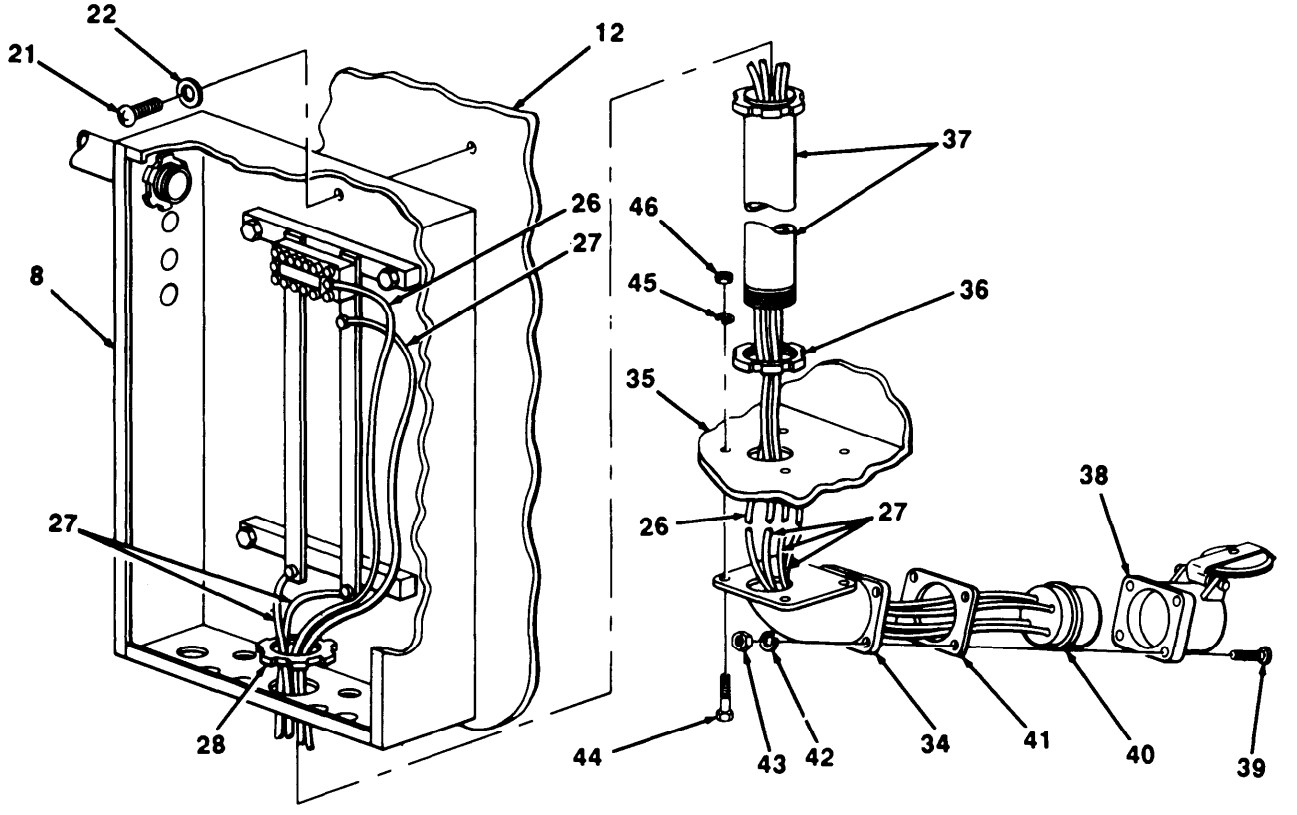

TA505347

4-69. 110-VOLT ELECTRICAL SYSTEM MAINTENANCE (Con't).

7. Connect three inlet wire leads (27) and ground wire lead (26) on bus bars (32) and terminal board (7). Tighten three screws (24) and screw (23).

8. Install conduit (4) on box (8) with connector (33).

9. Position ground wire lead (5) and two wire leads (3) inside box (8),

10. Install two circuit breakers (31) on bus bars (32) with four screws (29), Repeat for two spare circuit breakers (25).

11. Install two wire leads (3) on two circuit breakers (31) and tighten two screws (30).

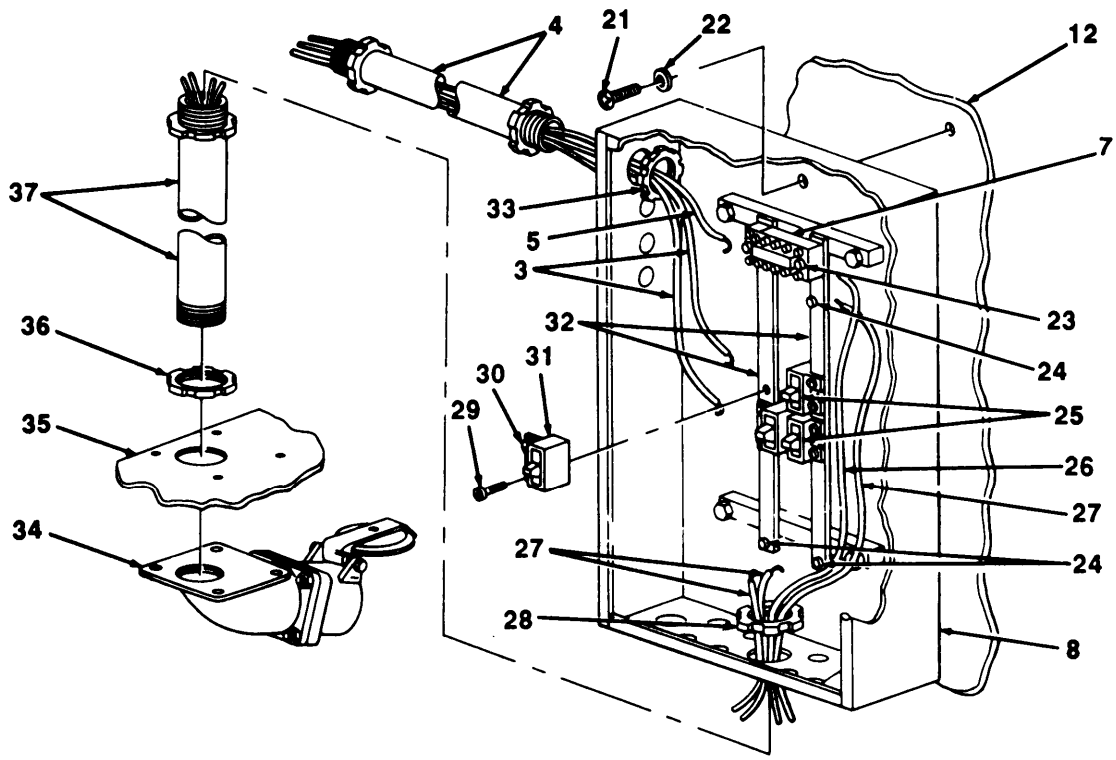

TA505348

4-69. 11 O-VOLT ELECTRICAL SYSTEM MAINTENANCE (Con't).

12. Install ground wire lead (5) on terminal board (7) and tighten screw (6).

13. Install cover (18) on box (8) with two flatwashers (19) and setscrews (20).

14. Install four screws (1) on two hinges (2) and box (8).

15. Install junction box (11) on wall (12) with two screws (13).

16. Install conduit (4) to junction box (11) with connector (10).

17. Position two receptacles (15) inside junction box (11). Connect two wire leads (3), ground wire lead (5), and jumper wire (9) on two receptacles and tighten four screws (14).

18. Install cover (16) on junction box (11) with four screws (17).

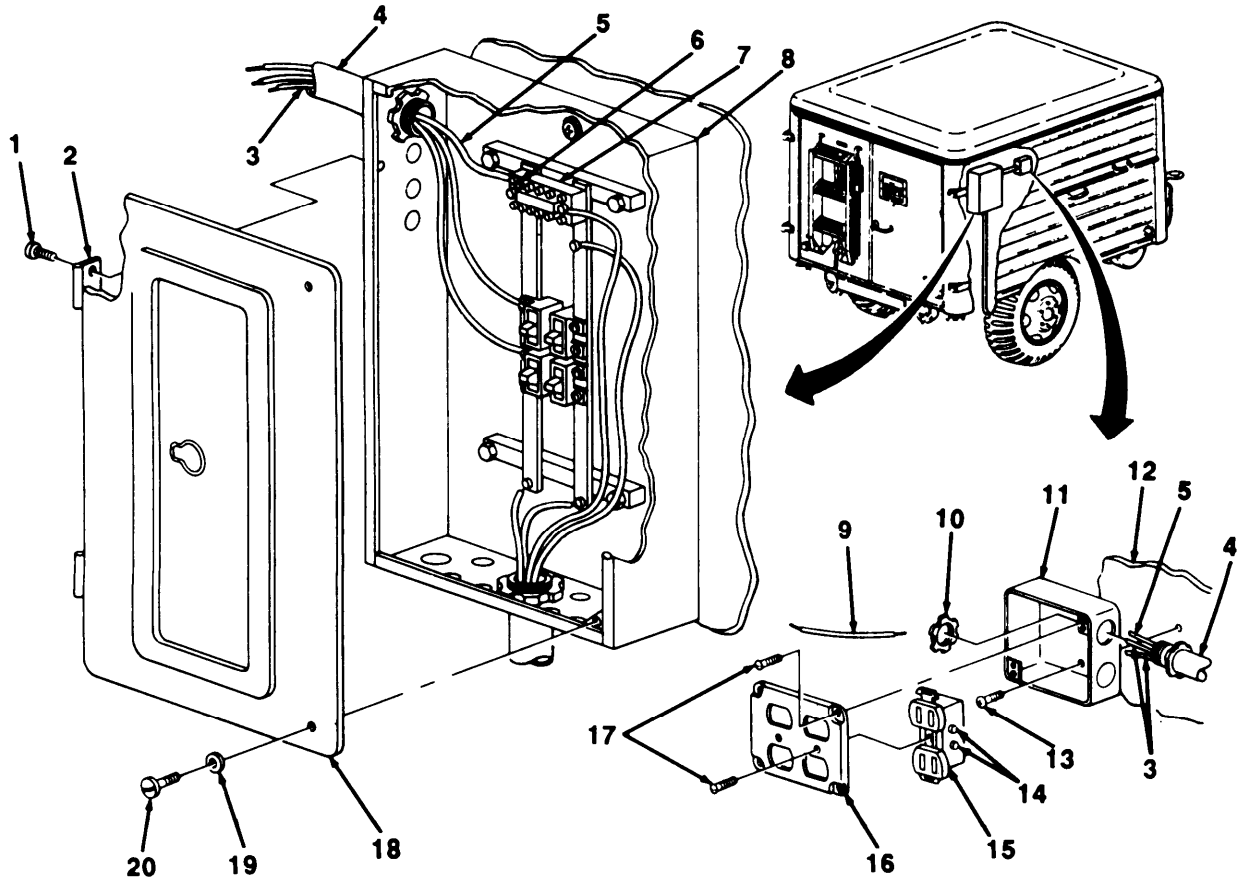

FOLLOW-ON TASKS:

- Connect auxillary power cable and check operation of 110-volt electrical system (para 2-15).

TA505349

4-70. 110-VOLT ELECTRICAL SYSTEM TESTING.

This Task Covers:

a. Receptacle Testing
b. Circuit Breaker Testing
c. Auxiliary Power Cable Testing

Initial Setup:

Tools/Test Equipment:

- General mechanic's tool kit
- Common No. 1 shop set
- Multimeter

a. RECEPTACLE TESTING

NOTE

Ensure that multimeter is set at lowest resistance measuring scale for all continuity checks.

1. Touch black probe (4) to terminal screw (3) on receptacle (2).
2. Insert red probe (1) into receptacle slot (5) on receptacle (2).
3. Repeat steps 1 and 2 for all receptacle slots (5) and terminal screws (3). if multimeter does not indicate continuity on both sides of receptacle (2), replace receptacle. If multimeter indicates continuity, repeat steps 1 and 2 for both upper receptacle slots.

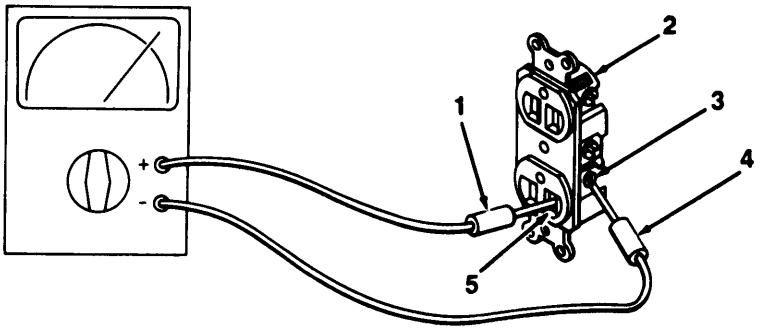

TA505350

4-70. 110-VOLT ELECTRICAL SYSTEM TESTING (Con't).

b. CIRCUIT BREAKER TESTING

NOTE

Ensure that multimeter is set at lowest resistance measuring scale for all continuity checks.

1. Set ON/OFF lever (6) to ON position.
2. Touch black probe (4) to terminal screw (9).
3. Touch red probe (1) to terminal (8). If multimeter does not indicate continuity, replace circuit breaker (7).

c. AUXILIARY POWER CABLE TESTING

NOTE

- **Ensure that multimeter is set at lowest resistance measuring scale for all continuity checks.**
- **To test auxiliary power cable (11), the pin and associated contact at each end of cable must be touched at the same time. All pins and contacts are identified by letters.**

1. Touch red probe (1) to contact B (10) on auxiliary power cable (11).
2. Touch black probe (4) to pin B (12) on auxiliary power cable (11).
3. Repeat steps 1 and 2 for each pin and associated contact. If multimeter does not indicate continuity, replace auxiliary power cable (11).

TA505351

4-71. RECEPTACLE REPAIR.

This Task Covers:

0. Disassembly
b. Assembly

Initial Setup:

Equipment Conditions:

- Receptacle removed (para 4-69).

Tools/Test Equipment:

- Common no. 1 shop set
- Soldering gun

Materials/Parts:

- Solder (item 15, Appendix E)
- Marker tags (Item 16, Appendix E)

a. DISASSEMBLY

NOTE

Wire leads (2) should be tagged for assembly.

1. Remove nut (1) from connector shell (5). Remove grommet (4) with wire leads (2) from connector shell.
2. Remove pins (3) from grommet (4).

NOTE

Unsolder only those wire leads (2) being replaced.

3. Remove pins (3) from wire leads (2).

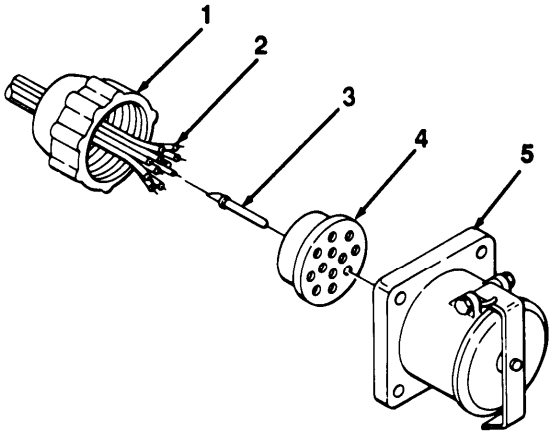

b. ASSEMBLY

1. Solder new wire leads (2) to pins (3).
2. Insert pins (3) into grommet (4).
3. Position grommet (4) on connector shell (5) and install nut (1).

FOLLOW-ON TASKS:

- Install receptacle (para 4-69).
- Check operation of 110-volt electrical system (para 2-15).

TA505352

Section XIV. ACCESSORY ITEMS MAINTENANCE

Paragraph Title	Page Number
Data Plate Replacement	4-146
Reflector Replacement	4-144

4-72. REFLECTOR REPLACEMENT.

This Task Covers:

a. Replacement (All Except M448)

b. Replacement (M448)

Initial Setup:

Materials/Parts:

- Two lockwashers

Tools/Test Equipment:

- General mechanic's tool kit

a. REPLACEMENT (ALL EXCEPT M448)

1. Remove two nuts (3), lockwashers (2), screws (5), and reflector (1) from body (4). Discard lockwashers.
2. Install reflector (1) on body (4) with two screws (5), new lockwashers (2), and nuts (3).

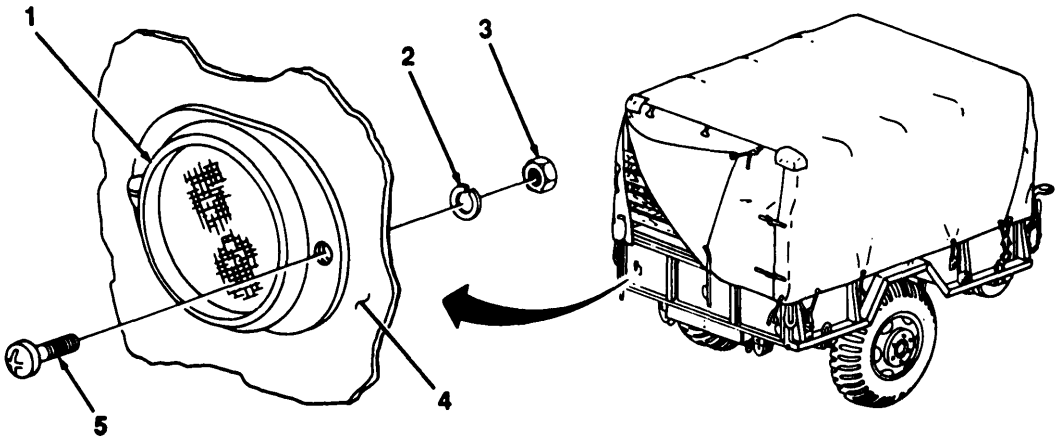

TA505353

4-72. REFLECTOR REPLACEMENT (Con't).

b. REPLACEMENT (M448)

1. Remove two screws (6) and reflector (1) from body (4).
2. Install reflector (1) on body (4) with two screws (6).

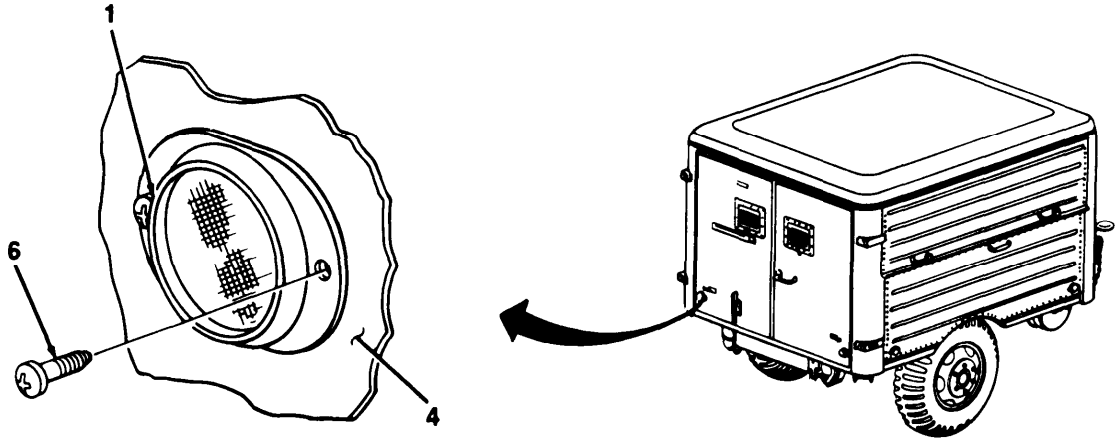

TA505354

4-73. DATA PLATE REPLACEMENT.

This Task Covers:

Replacement

Initial Setup:

Tools/Test Equipment:

- General mechanic's tool kit

REPLACEMENT

NOTE

All data plates are replaced the same way; quantity of screws may vary

1. Remove six screws (3) and data plate (2) from frame (1).
2. Install data plate (2) on frame (1) with six screws (3).

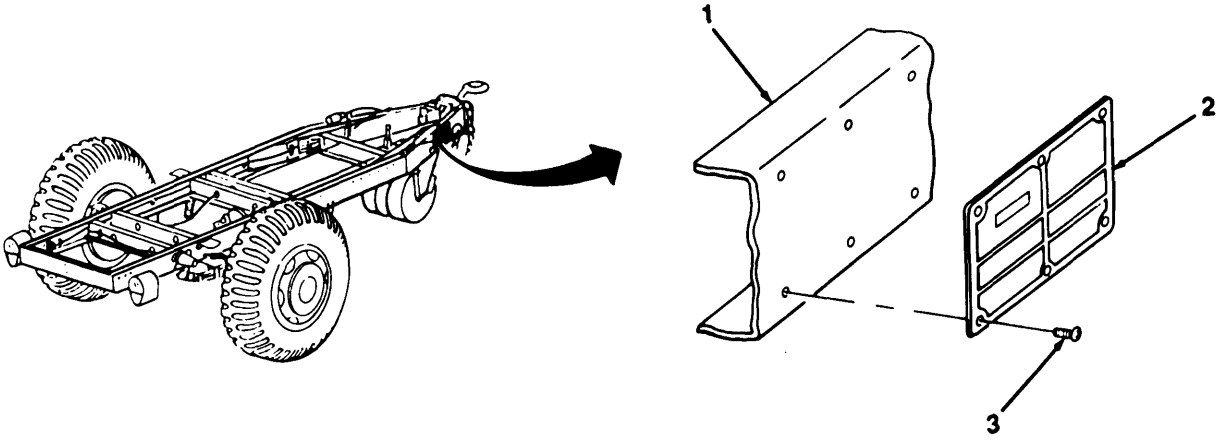

TA505355

Section XV. PREPARATION FOR STORAGE OR SHIPMENT

Paragraph Title	Page Number
Care of Equipment in Administrative Storage	4-149
Definition of Administrative Storage	4-147
Exercise Schedule, Table 4-3	4-149
General	4-147
Preparation of Equipment for Administrative Storage	4-147
Preparation of Equipment for Shipment	4-150
Procedures for Common Components and Miscellaneous Items	4-150
Removal of Equipment from Administrative Storage	4-150

4-74. GENERAL.

a. This section contains requirements and procedures for administrative storage of equipment that is issued to and in use by Army activities worldwide.

b. The requirements specified herein are necessary to maintain equipment in administrative storage in such a way as to achieve the maximum readiness condition.

c. Equipment that is placed in administrative storage should be capable of being readied to perform its mission within a 24-hour period, or as otherwise may be prescribed by the approving authority. Before equipment is placed in administrative storage, a current preventive maintenance checks and services (PMCS) should be completed and deficiencies corrected.

d. Report equipment in administrative storage as prescribed for all reportable equipment.

e. Perform inspections, maintenance services, and lubrication as specified herein.

f. Records and reports to be maintained for equipment in administrative storage are those prescribed by DA Pam 738-750, for equipment in use.

g. A 10% variance is acceptable on time, running hours, or mileage used to determine the required maintenance actions.

h. Accomplishment of applicable PMCS, as mentioned throughout this section, will be on a quarterly basis.

4-75. DEFINITION OF ADMINISTRATIVE STORAGE.

The placement of equipment in administrative storage can be for short periods of time when a shortage of maintenance effort exists. Items should be ready for use within the time factors as determined by the directing authority. During the storage period, appropriate maintenance records will be kept.

4-76. PREPARATION OF EQUIPMENT FOR ADMINISTRATIVE STORAGE.

a. Storage Site.

(1) Select the best available site for administrative storage. Separate stored equipment from equipment in use. Conspicuously mark the area “Administrative Storage”

(2) Covered space is preferred.

(3) Open sites should be improved hardstand, if available. Unimproved sites should be firm, well-drained, and kept free of excessive vegetation.

4-76. PREPARATION OF EQUIPMENT FOR ADMINISTRATIVE STORAGE (Con't).

b. Storage Plan.

(1) Store equipment so as to provide maximum protection from the elements and to provide access for inspection, maintenance, and exercising. Anticipate removal or deployment problems and take suitable precautions.

(2) Take into consideration environmental conditions, such as extreme heat or cold; high humidity; blowing sand, dust, or loose debris; soft ground; mud; heavy snows; or combinations thereof, and take adequate precautions.

(3) Establish a fire plan and provide for adequate firefighting equipment and personnel.

c. Maintenance Services and inspection.

(1) Maintenance Semites. Prior to storage, perform the next scheduled organizational PMCS.

(2) inspection. Inspect and approve the equipment prior to storage. Do not place equipment in storage in a nonmission-capable condition.

d. Auxiliary Equipment and Basic Issue Items,

(1) Process auxiliary and basic issue items simultaneously with the major item to which they are assigned.

(2) If possible, store auxiliary and basic issue items with the major item.

(3) If stored apart from the major item, mark auxiliary and basic issue items with tags indicating the major item, its registration or serial number and location, and store in protective type closures. In addition, place a tag or list indicating the location of the removed items in a conspicuous place on the major item.

e. Correction of Shortcoming and Deficiencies. Correct ail shortcomings and deficiencies prior to storage, or obtain a deferment from the approving authority.

f. Lubrication, Lubricate equipment in accordance with instructions in Chapter 3, Section I.

g. General Cleaning, Painting and Presentation.

CAUTION

Do not direct water or steam, under pressure, against unsealed electrical systems or any exterlor opening. Failure to follow this caution may result In damage to equipment

(1) Cleaning. Clean the equipment of dirt, grease, and other contaminants, but do not use vapor degreasing.

(2) Painting. Remove rust and damaged paint by scraping, wire brushing, sanding, or buffing. Sand to a smooth finish and spot paint as necessary (TB 43-0209).

(3) Preservation. After cleaning and drying, immediately coat unpainted metal surfaces with oil or grease, as appropriate (Chapter 3, Section i).

CAUTION

Place a piece of barrier material (Item 1, Appendix E) between desiccant bags and metal surfaces.

NOTE

Air circulation under draped covers reduces deterioration from moisture and heat.

(4) Weatherproofing. Sunlight, heat, moisture (humidity), and dirt tend to accelerate deterioration. install all covers (including vehicle protective closures) authorized for the equipment. Close and secure all openings except those required for venting and draining. Seal openings to prevent the entry of rain, snow, or dust. insert desiccant when complete seal is required. Place equipment and provide blocking or framing to allow for ventilation and water drainage. Support cover away from item surfaces which may rust, rot, or mildew.

4-77. CARE OF EQUIPMENT IN ADMINISTRATIVE STORAGE.

a. Maintenance Services. After equipment has been placed in administrative storage, inspect, service, and exercise as specified herein.

b. inspection. Inspection will usually be visual and must consist of at least a walk-around examination of all equipment to detect any deficiencies. Inspect equipment in open storage weekly and equipment in covered storage monthly. Inspect all equipment immediately after any severe storm or environmental change. The following are examples of things to look for during a visual inspection:

(1) Low or flat tires.

(2) Condition of preservatives, seals, and wraps.

(3) Torn, frayed, or split canvas covers and tops.

(4) Corrosion or other deterioration.

(5) Missing or damaged parts.

(6) Water in compartments.

(7) Any other readily recognizable shortcomings or deficiencies.

c. Repair During Administrative Storage. Keep equipment in an optimum state of readiness. Accomplish the required services and repairs as expeditiously as possible. Whenever possible, perform all maintenance on-site.

d. Exercising. Exercise equipment in accordance with Table 4-3, Exercise Schedule, and the following instructions.

(1) Vehicle Major Exercise. Depreserve equipment by removing only that material restricting exercise. Close all drains, remove blocks, latch tailgates, and perform all before-operation checks. Couple trailer to towing vehicle, and drive for at least 25 mi (40 km). Make several right and left 90° turns. Make several hard braking stops without skidding. Do the following during exercising when it is convenient and safe: operate all other functional components and perform all during- and after-operation checks.

(2) Scheduled Services. Scheduled services will include inspection per subparagraph b above, and will be conducted in accordance with Table 4-3. Lubricate in accordance with instructions in Chapter 3, Section I.

(3) Corrective Action. Immediately take action to correct shortcomings and deficiencies noted. Record inspection and exercise results *on* DA Form 2404. Record and report all maintenance actions on DA Form 2407. After exercising, restore the preservation to the original condition. Replenish lubricants used during exercising, and note the amount on DA Form 2408.

Table 4-3. Exercise Schedule.

Weeks	2	4	6	8	10	12	14	16	18	20	22	24
PMCS						X						X
Scheduled Services		X		X		X		X		X		
Major Exercise												X

e. Rotation. Rotate items in accordance with any rotational plan that will keep the equipment in an operational condition and reduce the maintenance effort.

4-78. PROCEDURES FOR COMMON COMPONENTS AND MISCELLANEOUS ITEMS.

a. Tires. Visually inspect tires during each walk-around inspection. This inspection includes checking tires with a tire gage. Inflate, “repair, or replace as necessary those found to be low, damaged, or excessively worn. Mark inflated and repaired tires with a crayon for checking at the next inspection.

b. Air Lines and Reservoirs, Drain air lines and reservoirs of condensation, and leave draincocks open, Attach a caution tag, annotated to provide for closing of draincocks when the equipment is exercised. Place tags in a conspicuous location.

c. M107 Series Water Tank, Piping, and Faucets, Drain and purge with dried compressed air. Do not apply contact preservatives. Leave all drains, valves, and faucets open.

d. Seals. Seals may develop leaks during storage, or shortly thereafter. If leaking persists, refer to the applicable maintenance section in this manual for corrective maintenance procedures.

4-79. REMOVAL OF EQUIPMENT FROM ADMINISTRATIVE STORAGE.

a. Activation. Restore the equipment to normal operating condition in accordance with the instructions contained in Chapter 4, Section II.

b. Servicing. Resume the maintenance service schedule in effect at the commencement of storage, or service the equipment before the scheduled dates in order to produce a staggered maintenance workload.

4-80. PREPARATION OF EQUIPMENT FOR SHIPMENT.

a. Refer to TM 55-200, TM 55-601, and TM 743-200-1 for additional instructions on processing, storage, and shipment of materiel.

b. Trailers that have been removed from storage for shipment do not have to be reprocessed if they will reach their destination within the administrative storage period. Reprocess only if inspection reveals any corrosion, or if anticipated in-transit weather conditions make it necessary.

c. When a trailer is received and has already been processed for domestic shipment, as indicated on DD Form 1397, the trailer does not have to be reprocessed for storage unless corrosion and deterioration are found during the inspection upon receipt, List on SF 364 all discrepancies found because of poor preservation, packaging, packing, marking, handling, loading, storage, or excessive preservation. Repairs that cannot be handled by the receiving unit must have tags attached listing needed repairs. A report of these conditions will be submitted by the unit commander for action by an ordnance maintenance unit.

CHAPTER 5
DIRECT SUPPORT AND GENERAL SUPPORT MAINTENANCE

Section I. REAR AXLE MAINTENANCE

5-1. REAR AXLE REPLACEMENT.

This Task Covers:

a. Removal

b. Installation

Initial Setup:

Equipment Conditions:

- Hub and brakedrum removed (para 4-48 or 4-49).

Tools/Test Equipment:

- General mechanic's tool kit
- Drain pan
- Floor jack
- Two jackstands

Materials/Parts:

- Rags (Item 11, Appendix E)
- Twenty-five lockwashers

Personnel Required: Two

a. REMOVAL

WARNING

Axle (4) is heavy and awkward to handle. Use caution, provide adequate support, and use assistance during removal. Failure to follow this warning may result in serious injury.

1. Raise axle (4) with floor jack and place a jackstand under each corner of rear crossmember (1).
2. Disconnect handbrake cable (3) from handbrake lever (2).

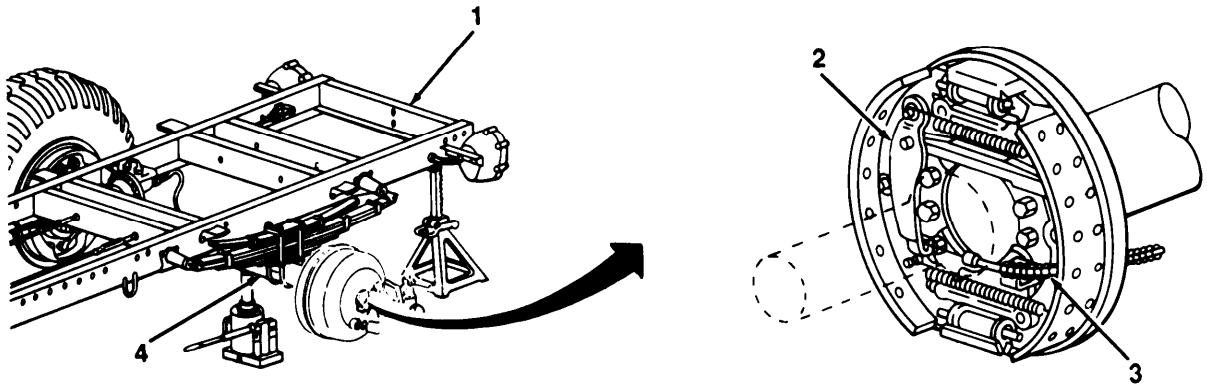

TA505356

5-1. REAR AXLE REPLACEMENT (Con't).

3. Loosen two nuts (5) and remove handbrake cable (3) from guide bracket (11) on backing plate (10).

NOTE

A suitable container should be used to catch any draining brake fluid. Ensure that all spills are cleaned up.

4. Loosen nut (7) and disconnect tube (6) from connector (9).

5. Remove 12 nuts (14), lockwashers (13), flatwashers (12), screws (8), and backing plate (10) from axle (4). Discard lockwashers.

6. Repeat steps 2 through 5 on opposite end of axle (4).

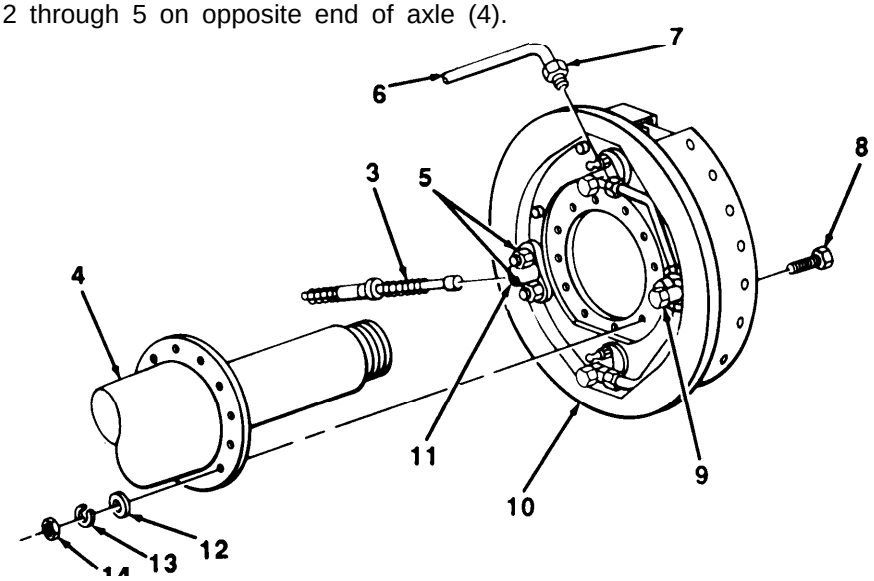

7. Remove nut (18), lockwasher (17), connector (16), and two tubes (6) from axle (4). Discard lockwasher.

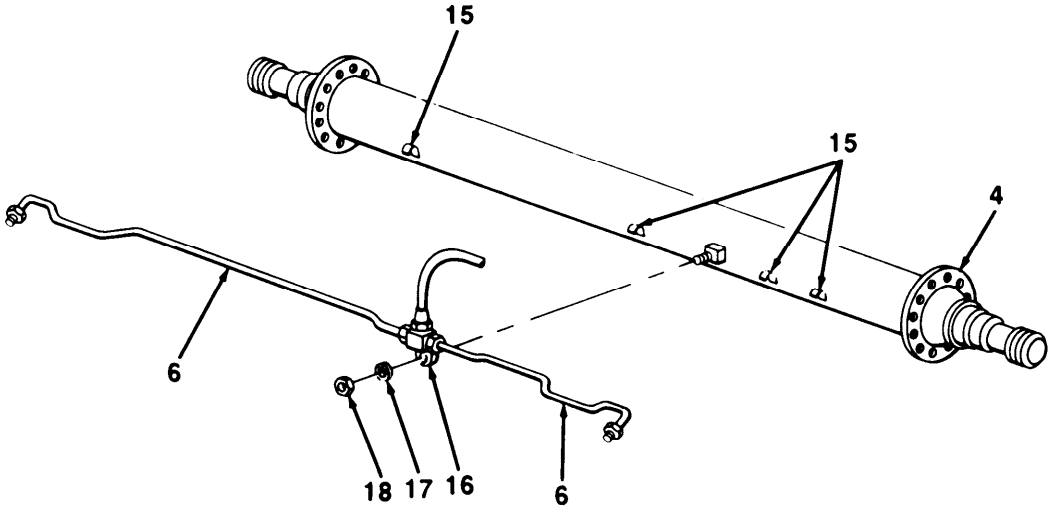

TA505357

5-1. REAR AXLE REPLACEMENT (Con't).

8. Using floor jack, raise and support axle (4) at both ends. Remove eight nuts (20), four U-bolts (22), and two plates (19) from axle (4) and springs (21).

9. Carefully lower and remove axle (4) from springs (21).

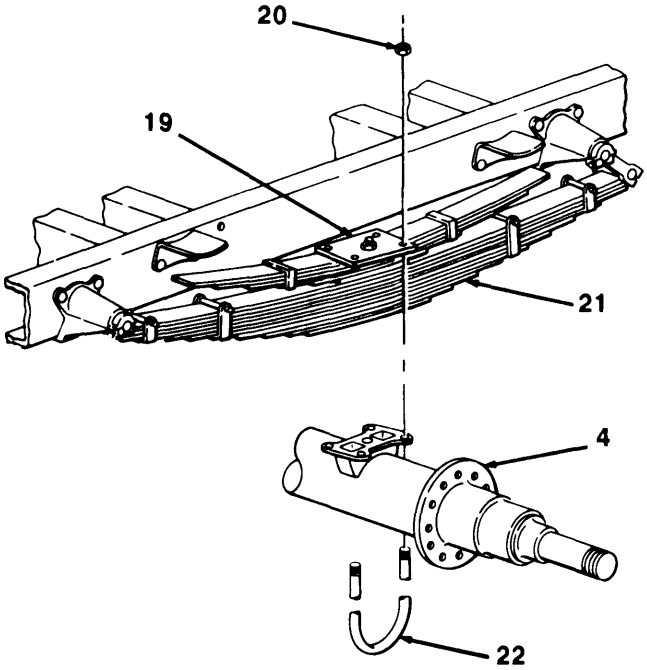

lb. INSTALLATION

WARNING

Axle (4) is heavy and awkward to handle. Use caution, provide adequate support, and use assistance during installation. Failure to follow this warning may result in serious injury.

1. Carefully raise and position axle (4) on springs (21). Support axle at both ends.

2. install four U-bolts (22), two plates (19), and eight nuts (20) on axle (4) and springs (21).

3. Install connector (20) and two tubes (6) on axle (4) with new lockwasher (21) and nut (22). Secure tubes under clips (15).

4. Install backing plate (10) on axle (4) with 12 screws (8), flatwashers (12), new lockwashers (13), and nuts (14).

5. Connect tube (6) to connector (9) and tighten nut (7).

6. Position handbrake cable (3) under guide bracket (11) and tighten two nuts (5).

TA505358

5-1. REAR AXLE REPLACEMENT (Con't).

7. Connect handbrake cable (3) to handbrake lever (2).

8. Repeat steps 4 through 7 for opposite end of axle (4).

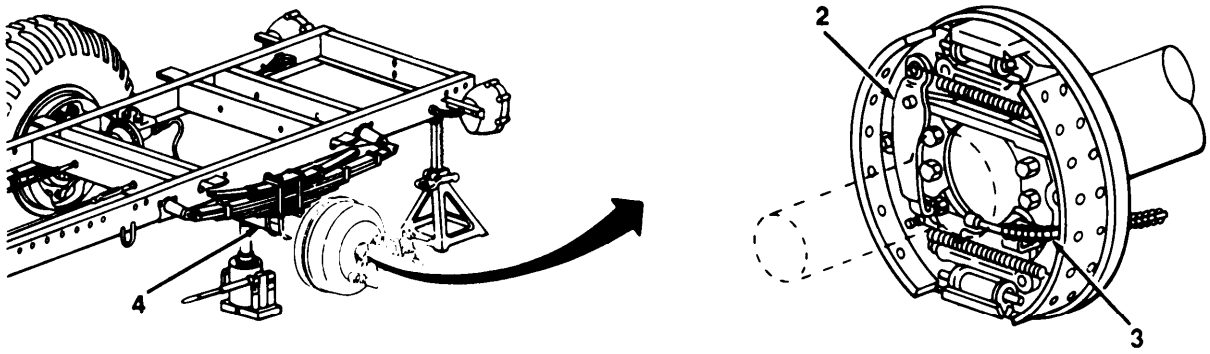

FOLLOW-ON TASKS:

- Install hub and brakedrum (para 4-48 or 4-49)
- Bleed brakes (para 4-39).

TA505369

Section II. BRAKEDRUM AND TIRE MAINTENANCE

Paragraph Title	Page Number
Brakedrum Repair	5-5
Tire Repair	5-6

5-2. BRAKEDRUM REPAIR.

This Task Covers:

a. Inspection

b. Repair

Initial Setup:

Equipment Conditions:

- Hub and brakedrum removed (para 4-48 or 4-49).

Tools/Test Equipment:

- General mechanic's tool kit
- Field automotive shop set
- Brakedrum lathe
- Dial indicator
- Inside micrometer, with extension

a. INSPECTiON

WARNING

DO NOT handle brakeshoes, brakedrums, or other brake components unless area has been properly cleaned. There may be asbestos dust on these components which can be dangerous if you touch it or breathe it. Wear an approved filter mask and gloves. Never use compressed air or a dry brush to clean brake components. Dust may be removed using an industrial-type vacuum cleaner. Clean dust or mud away from brake components with water and a wet, soft brush or cloth. Failure to follow this warning may result in serious illness or death.

1. Inspect stud holes (2) for cracks (3). Discard brakedrum (1) if cracks are present.

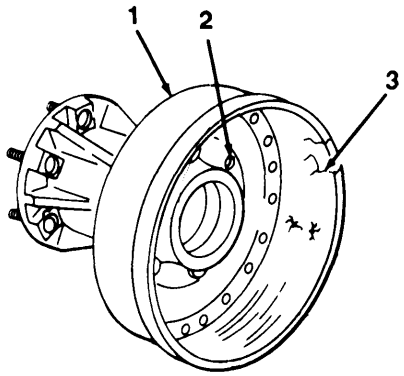

TA505360

5-2. BRAKEDRUM REPAIR (Con't).

WARNING

DO NOT use a brakedrum that exceeds maximum wear specifications. Failure to follow this warning may result in brake failure and serious injury or death.

2. Inspect braking surface (6) for cracks (3), heat checking (4), and scoring (5). Reface braking surface if damaged (subpara b).

3. Inspect braking surface (6) for out-of-round at 45° intervals. Out-of-round should not exceed 0.006 in. (0. 15 mm). If runout exceeds 0.006 in. (0. 15 mm), reface braking surface (subpara b).

4. Measure inside diameter of brakedrum (1). Discard brakedrum if inside diameter exceeds 15.23 in. (38.68 cm).

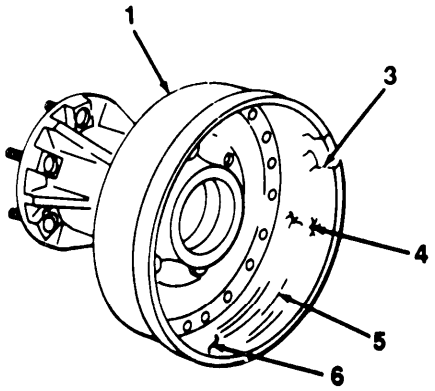

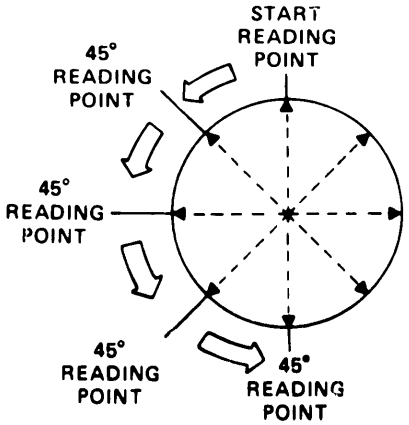

b. REPAIR

WARNING

DO NOT use a brakedrum that l xcood. maximum wear specifications. Failure to **follow this warning may result in brake failure and serious injury or death.**

1. Reface braking surface (6) with brakedrum lathe, removing a maximum of 0.01 in. (0.25 mm) per cut.

2. Discard brakedrum (1) if inside diameter exceeds 15.23 in. (38.68 cm) after repair.

FOLLOW-ON TASKS:

- Install hub and brakedrum (para 4-48 or 4-49)

5-3. TIRE REPAIR.

Refer to TM 9-2610-200-24 for instructions on tire repair.

TA505361

Section III. CARGO BODY MAINTENANCE (M105 SERIES)

Paragraph Title	Page Number
Cargo Body Maintenance (M105A1)	5-7 Cargo Body Maintenance (M105A2 and M105A2C)	5-10

5-4. CARGO BODY MAINTENANCE (M105A1).

This Task Covers:

a. Removal
b. Repair
c. Installation

Initial Setup:

Materials/Parts:

- Sixteen locknuts

References:

- TB 9-2300-247-40
- TM 9-237

Tools/Test Equipment:

- General mechanic's tool kit
- Welder's tool kit

Personnel Required: Two

5-4. CARGO BODY MAINTENANCE (M105A1) (Con't).

a. REMOVAL

1. Remove 12 locknuts (9) and bolts (3) from cargo body (1) and chassis (4). Discard locknuts.

2. Remove four locknuts (2), bolts (8), flatwashers (7), springs (6), and two brackets (5) from cargo body (1) and chassis (4), Discard locknuts.

WARNING

Stand clear of lifting device when raising or lowering cargo body (1). Failure to follow this warning may result in serious injury or death.

3. Using a suitable lifting device, lift cargo body (1) from chassis (4).

b. REPAIR

Refer to TB 9-2300-247-40 for instructions on cargo body repair.

c. INSTALLATION

WARNING

Stand clear of lifting device when raising or lowering cargo body (1). Failure to follow this warning may result in serious injury or death.

1. Lift cargo body (1) into position on chassis (4).

NOTE

Perform stop 2 if front mounts on cargo body (1) do not aline with holes on chatsis (4).

2. Remove front mounts from cargo body (1) and weld in proper position (TM 9-237).

3. Position two brackets (5) on cargo body (1) and chassis (4) and loosely install four bolts (8), flatwashers (7), springs (6), and new locknuts (2).

4. Loosely install 12 bolts (3) and new locknuts (9) on cargo body (1) and chassis (4).

5. Fully tighten 16 locknuts (2 and 9).

5-4. CARGO BODY MAINTENANCE (M105A1) (Con't).

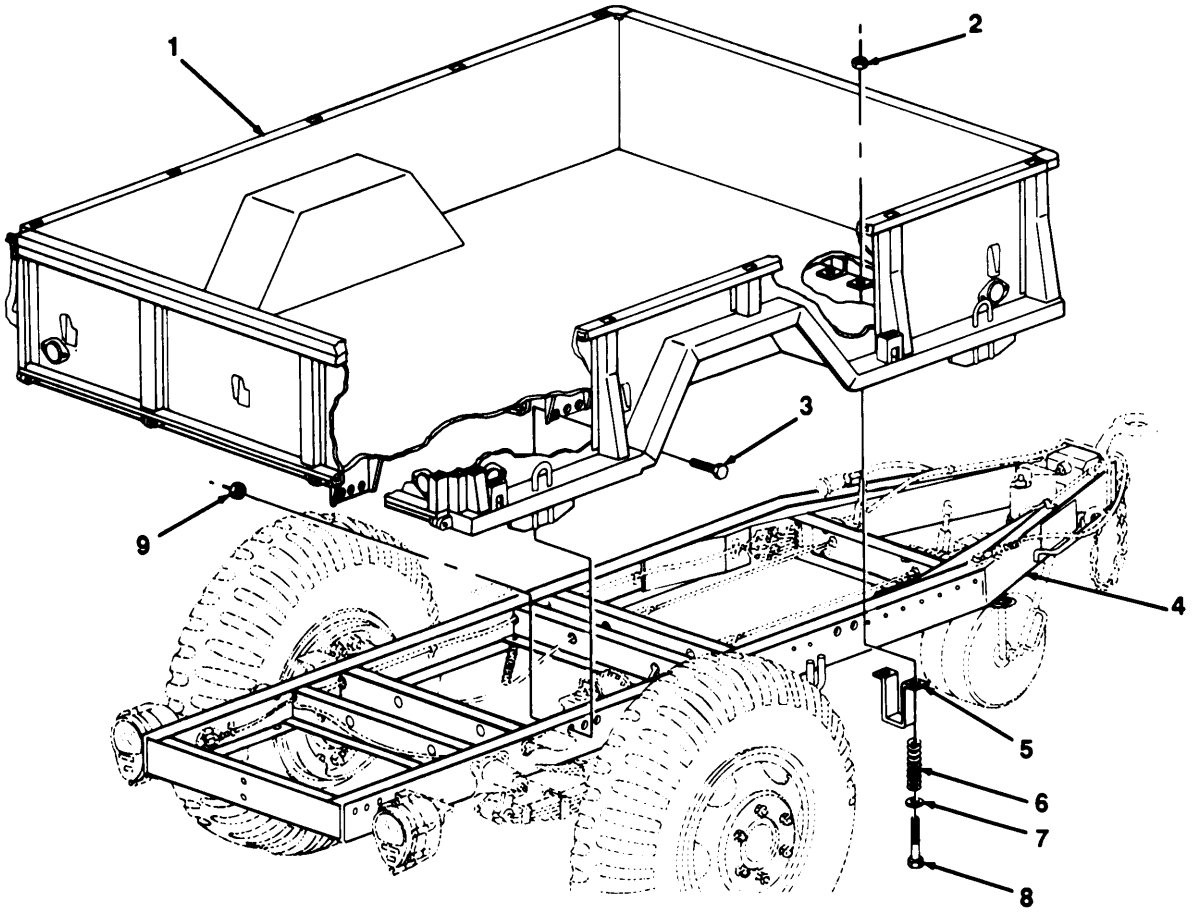

TA505362

5-5. CARGO BODY MAINTENANCE (M105A2 AND M105A2C).

This Task Covers:

a. Removal
b. Repair
c. Installation

Initial Setup:

Materials/Parts:

- Ten lockwashers

References:

- TB 9-2300-247-40
- TM 9-237

Tools/Test Equipment:

- General mehanic's tool kit
- Welder's tool kit

Personnel Required: Two

a. REMOVAL

1. Remove ten nuts (2), lockwashers (3), and screws (4) from cargo body (1) and chassis (5). Discard lockwashers.

WARNING

Stand clear of lifting device when raising or lowering cargo body (1). Failure to follow this warning may result in serious injury or death.

2. Using a suitable lifting device, lift cargo body (1) from chassis (5).

b. REPAIR

Refer to TB 9-2300-247-40 for instructions on cargo body repair.

c. INSTALLATION

WARNING

Stand clear of lifting device when raising or lowering cargo body (1). Failure to follow this warning may result in serious injury or death.

1. Lift cargo body (1) into position on chassis (5).

NOTE

Perform step 2 if front mounts on cargo body (1) do not aline with holes on chassis (5).

2. Remove front mounts from cargo body and weld in proper position (TM 9-237).
3. Install ten screws (4), new lockwashers (3), and nuts (2) on cargo body (1) and chassis (5).

5-5. CARGO BODY MAINTENANCE (M105A2 AND M105A2C) (Con't).

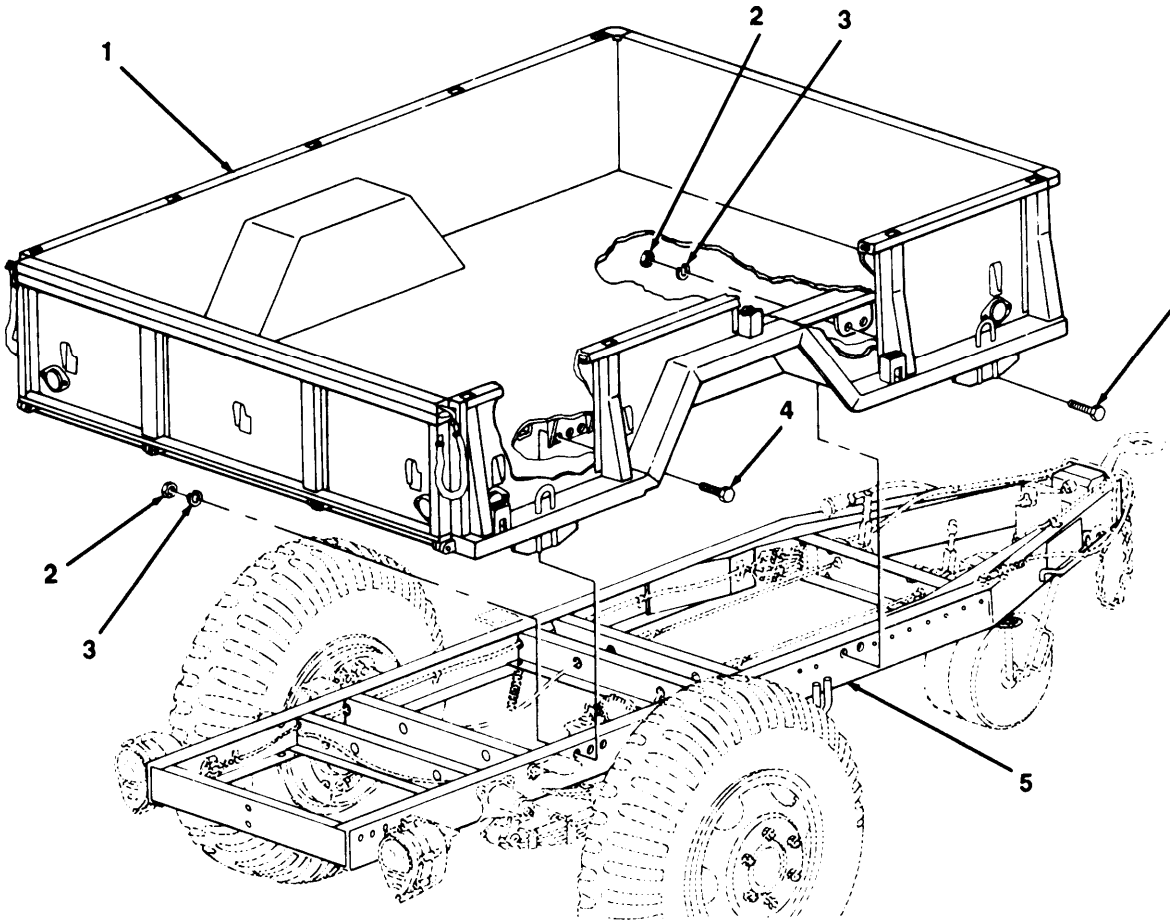

TA505363

Section IV. WATER TANK BODY MAINTENANCE (M107 SERIES)

Paragraph Title	Page Number
Discharge Valve Replacement	5-12
Frame Assembly Maintenance	5-18
Manhole Cover Maintenance,	5-20
Water Tank Body Maintenance	5-13

5-6. DISCHARGE VALVE REPLACEMENT.

This Task Covers:

a. Removal

b. Installation

Initial Setup:

Equipment Conditions:

- Water drained from tank (para 2-14).

Materials/Parts:

- One hose

a. REMOVAL

1. Loosen two clamps (2) and remove hose (3) from nipples (1 and 4). Discard hose.
2. Remove nipple (4) from discharge valve (5).
3. Remove discharge valve (5) and nipple (6) from bushing (7) and water tank body.

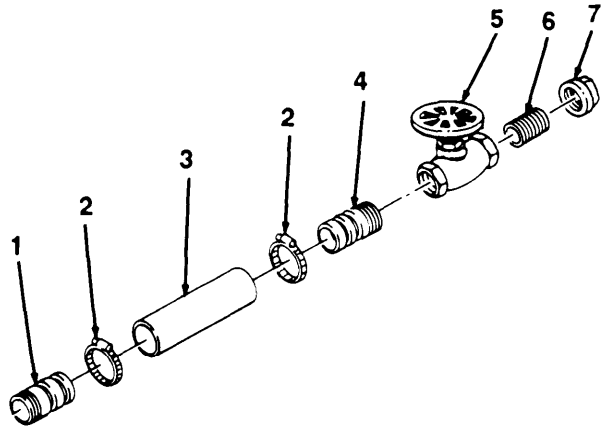

b. INSTALLATION

1. Install nipple (6) and discharge valve (5) on bushing (7) and water tank body.
2. Install nipple (4) on discharge valve (5).
3. Install new hose (3) on nipples (1 and 4) and tighten two clamps (2).

TA505364

5-7. WATER TANK BODY MAINTENANCE.

This Task Covers:

a. Removal
b. Cleaning and Refinishing interior
c. Repair
d. Installation

Initial Setup:

Equipment Condition:

- Water drained from tank (para 2-14).

Tools/Test Equipment:

- General mechanic's tool kit
- Abrasive mask
- Air blower, displacement
- Air filter
- Canvas sleeves
- Fresh air mask
- Rubber apron
- Rubber gloves
- Safety rope
- Safety shoes

Materials/Parts:

- Scrub brush (Item 3, Appendix E)
- Sandblast sand (item 12, Appendix E)
- Scouring powder (Item 13, Appendix E)
- Bleach (item 14, Appendix E)
- Eight locknuts
- Eight rubber shock mounts

Personnel Required: Two

References:

- FM 21-10
- TM 9-237
- TM 43-0139

a. REMOVAL

1. Remove discharge valve (8) from water tank (1) (para 5-6).

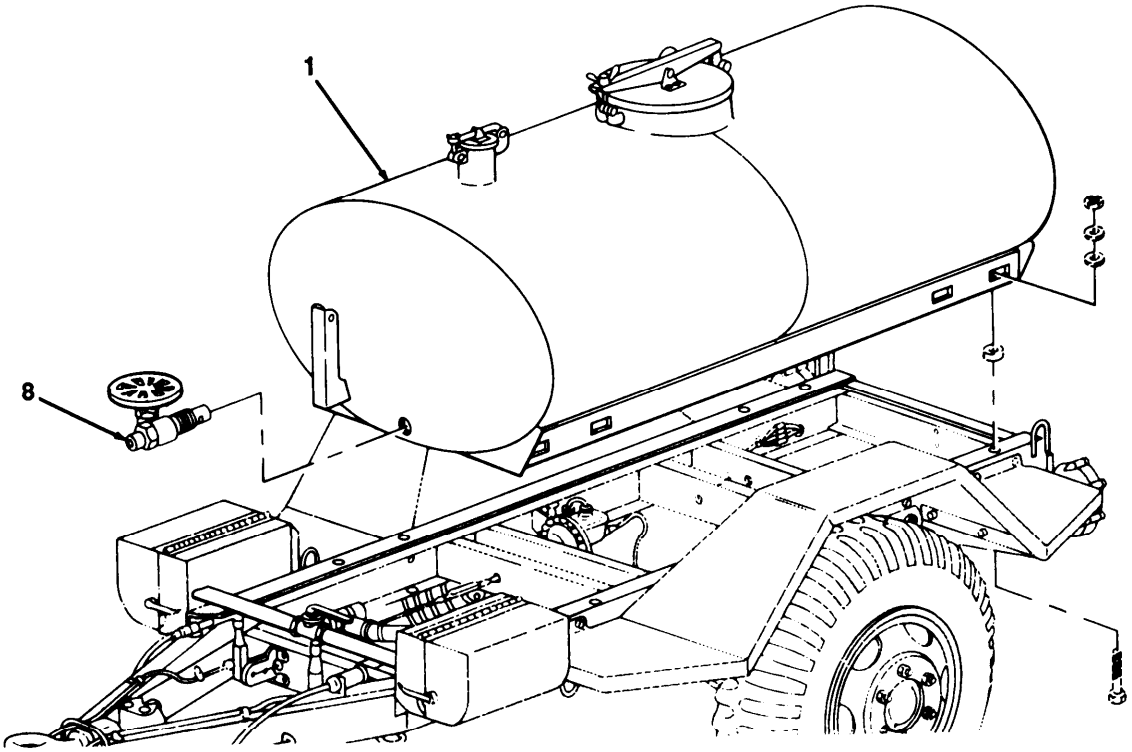

TA505365

5-7. WATER TANK BODY MAINTENANCE (Con't).

2. Remove eight locknuts (2), mounts (3), packings with retainers (4), and screws (7) from water tank (1) and frame (6). Discard locknuts.

WARNING

Stand clear of lifting device when raising or lowering water tank (1). Failure to follow this warning may result in serious injury or death.

3. Using a suitable lifting device, carefully remove water tank (1) from frame (6).

4. Remove eight rubber shock mounts (5). Discard rubber shock mounts.

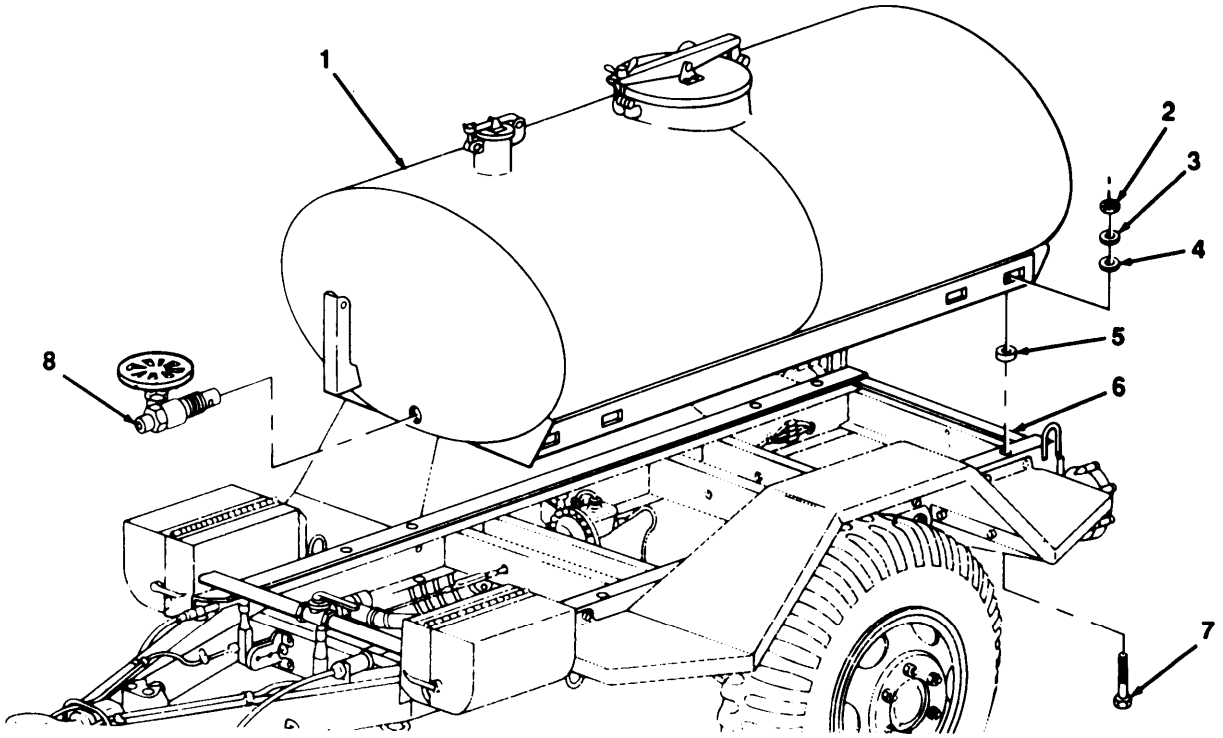

b. CLEANING AND REFINISHING INTERIOR

NOTE

Refer to FM 21-10 for further information on cleaning and disinfecting procedures.

1. Remove drainplug (15) from water tank (1). If installed, remove discharge valve (8) (para 5-6).

2. Loosen wingnut (11), open cover (12), and remove strainer (10) from vent (9).

3. Loosen wingnut (13) and open manhole cover (14).

TA505366

5-7. WATER TANK BODY MAINTENANCE (Con't).

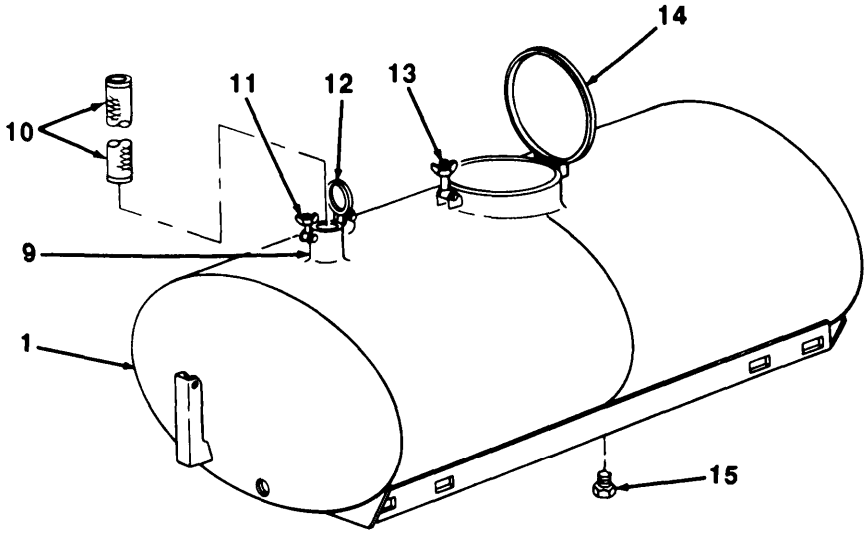

WARNING

- **NEVER work alone inside water tank. A safety rope must be secured around chest and under arms of person entering water tank. Opposite end of safety rope must be held by a person stationed at the manhole opening. This will allow for quick removal of person from water tank in the event of accident or personal injury.**
- **An adequate air evacuation system must be used to quickly exhaust fumes from inside water tank. Failure to follow this warning may result in injury or death.**
- **Personnel must wear rubber gloves, canvas sleeves, safety shoes, rubberized apron, and protective mask while performing abrasive cleaning operation. A portable air filter must also be used. Failure to follow this warning may result in injury.**
- **Nozzle pressure must not exceed 35 psi (241 kPa). Do not hold spray nozzle on any one area for extended periods of time. Failure to do so may result in tank rupture or damage and possible injury.**

4. Clean all interior surfaces of water tank (1), including baffle plates, corners, seams, drains, and outlets, with sandblast sand. Insert sandblasting nozzle and hose into piping to remove all corrosion and scale. Remove all traces of corrosion and old coatings.
5. Remove dust, dirt, and sandblasting material from water tank (1) with vacuum cleaner or other suitable equipment.
6. Scrub interior of body with scrub brush, water, and scouring powder solution.
7. Rinse water tank (1) repeatedly with warm water, approximately 120°F (49°C), to remove all traces of soapy solution.
8. Install drainplug (15). Install discharge valve (para 5-6).
9. Fill water tank (1) with water and add four gal (15 1) of liquid laundry bleach. Let stand eight hours to complete sanitation process. Drain water from tank (para 2-14).
10. Remove drainplug (15). Remove discharge valve (para 5-6).

TA505367

5-7. WATER TANK BODY MAINTENANCE (Con't).

11. Rinse water tank (1) repeatedly with warm water, approximately 120°F (49 °C), to remove all traces of bleach solution.

12. Dry water tank (1) completely with forced air heater.

13. Install drainplug (15). Install discharge valve (para 5-6).

14. Install strainer (10), close cover (12), and tighten wingnut (11) on vent (9).

15. Close manhole cover (14) and tighten wingnut (13).

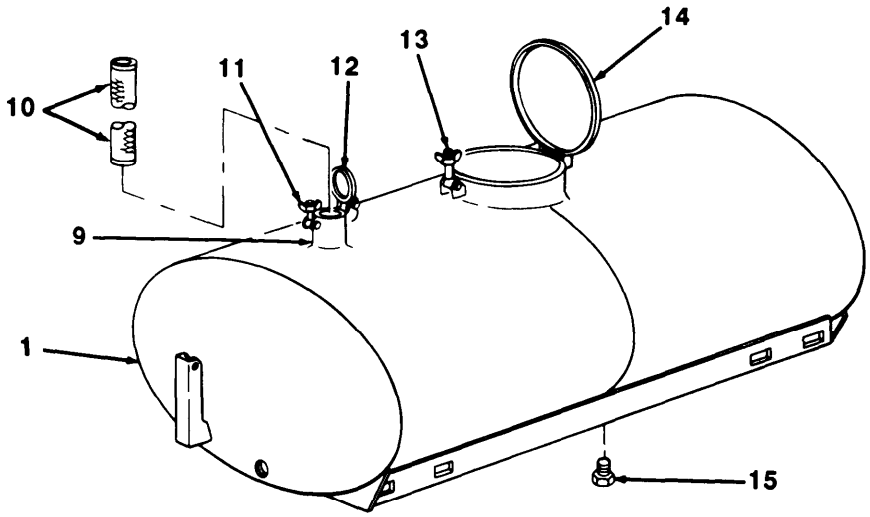

c. REPAIR

1. Refer to TM 9-237 for instructions on water tank body welding repair.

2. Refer to TM 43-0139 for instructions on painting water tank body exterior.

d. INSTALLATION

WARNING

Stand clear of lifting device when raising or lowering water tank (1). Failure to follow this warning may result in serious injury or death.

1. Position eight new rubber shock mounts (5) on water tank (1). Carefully lift water tank (1) onto frame (6).

TA505368

5-7. WATER TANK BODY MAINTENANCE (Con't).

2. Install eight screws (7), packings with retainers (4), mounts (3), and new locknuts (2) on water tank (1) and frame (6).

3. Install discharge valve (8) (para 5-6).

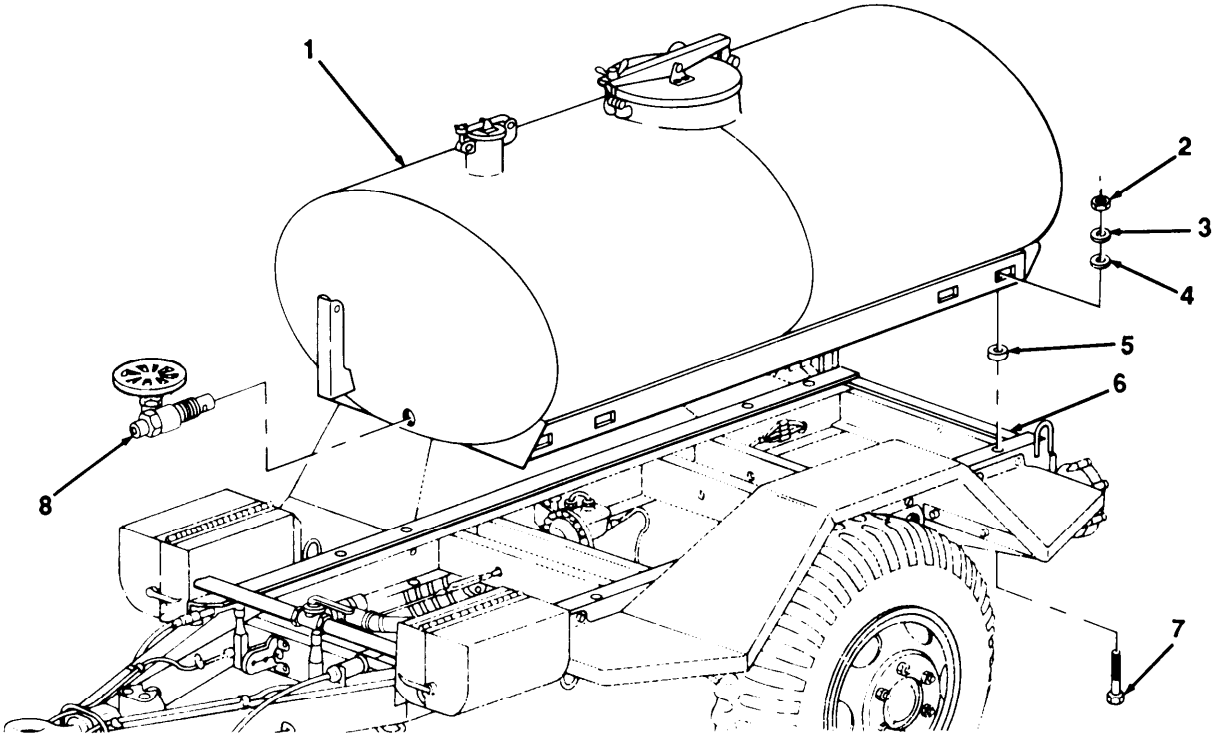

TA505369

5-8. FRAME ASSEMBLY MAINTENANCE.

This Task Covers:

a. Removal
b. Repair
c. Installation

Initial Setup:

Equipment Conditions:

- Fender and fender extensions removed (para 4-59).
- Water tank body removed (para 5-7).

Tools/Test Equipment:

- General mechanic's tool kit
- Welder's tool kit

Materials/Parts:

- Twenty-four lockwashers

Personnel Required: Two

References:

- TM 9-237

a. REMOVAL

WARNING

Stand clear of lifting device when raising or lowering frame assembly (1). Failure to follow this warning may result in serious Injury or death.

1. Remove 24 nuts (5), lockwashers (4), and bolts (2) from frame assembly (1) and chassis (3). Discard lockwashers.

2. Using a suitable lifting device, carefully lift frame assembly (1) from chassis (3).

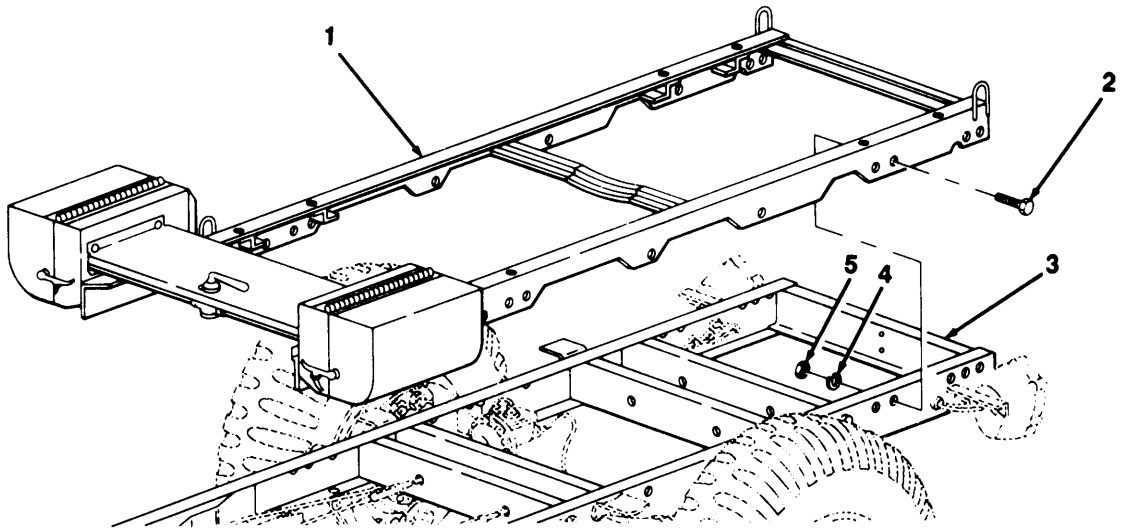

TA505370

5-8. FRAME ASSEMBLY MAINTENANCE (Con't).

b. REPAIR

Refer to TM 9-237 for instructions on frame assembly repair.

c. INSTALLATION

WARNING

Stand clear of lifting device when raising or lowering frame assembly (1). Failure to follow this warning may result in serious injury or death.

1. Carefully lift frame assembly (1) on chassis (3).
2. Loosely install 24 bolts (2), new lockwashers (4), and nuts (5) on frame assembly (1) and chassis (3). Fully tighten nuts.

FOLLOW-ON TASKS:

- Install water tank body (para 5-7).
- Install fender and fender extensions (para 4-59).

5-9. MANHOLE COVER MAINTENANCE.

This Task Covers:

a. Removal
b. Disassembly
Assembly
Installation

Initial Setup:

Tools/Test Equipment:

- General mechanic's tool kit

Materials/Parts:

- One seal
- Three cotter pins

a. REMOVAL

1. Remove wingnut (1) from eyebolt (3).
2. Remove cotter pin (4), flatwasher (5), pin and chain assembly (7), and remove cover (9) from bracket (6). Remove seal (8) from cover (9). Discard cotter pin and seal.

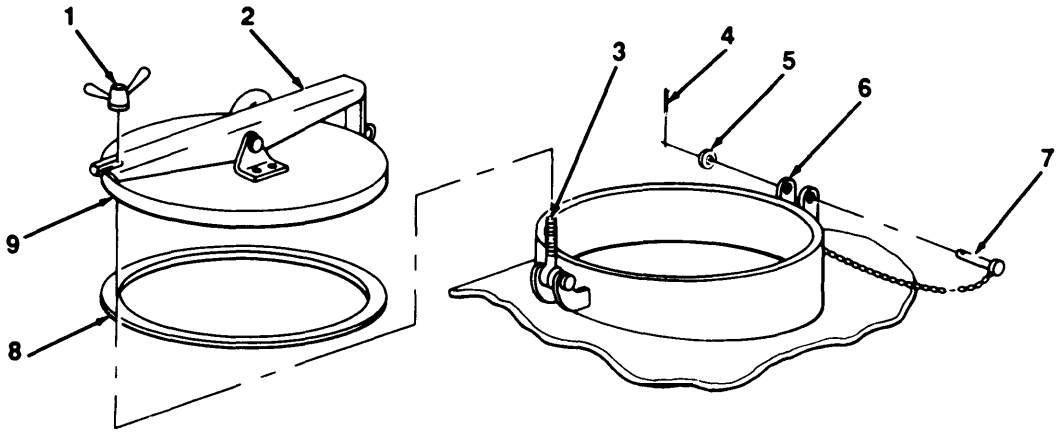

b. DISASSEMBLY

1. Remove cotter pin (10), pin (11), hinge (2), vent (12), and nipple (13) from cover (9). Discard cotter pin.
2. Remove cotter pin (17), flatwasher (16), pin (14), and eyebolt (3) from bracket (15). Discard cotter pin.

c. ASSEMBLY'

1. Install eyebolt (3) on bracket (15) with pin (14), flatwasher (16), and new cotter pin (17),
2. Install nipple (13) and vent (12) on cover (9).
3. Install hinge (2) on cover (9) with pin (11) and new cotter pin (10).

TA505371

5-9. MANHOLE COVER MAINTENANCE (Con't).

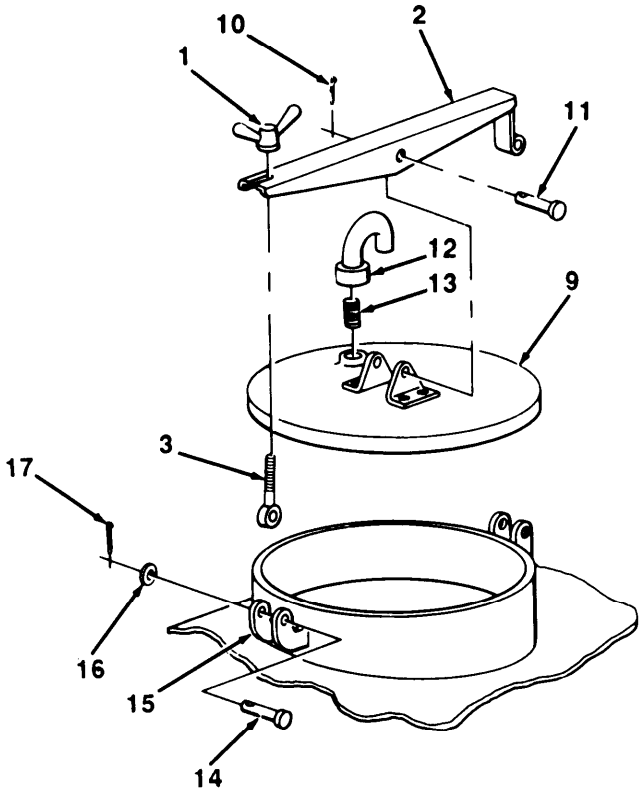

d. INSTALLATION

1. Install new seal (8) on cover (9). Install cover (9) on bracket (6) with pin and chain assembly (7), flatwasher (5), and new cotter pin (4).

2. Close cover (9) and install wingnut (1) on eyebolt (3).

Section V. SHOP VAN BODY MAINTENANCE (M448)

5-10. SHOP VAN BODY MAINTENANCE.

This Task Covers:

a. Removal
b. Repair
c. Installation

Initial Setup:

Materials/Parts:

- Two liners
- Eight locknuts

References:

- TM 9-237

Tools/Test Equipment:

- General mechanic's tool kit
- Welder's tool kit

Personnel Required: Two

a. REMOVAL

WARNING

Stand clear of lifting device when raising or lowering shop van body (1). Failure to follow this warning may result in serious injury or death.

1. Remove eight locknuts (4) and screws (2) from shop van body (1) and chassis (5). Discard locknuts.
2. Using a suitable lifting device, carefully lift shop van body (1) from chassis (5).
3. Remove two liners (3) from chassis (5). Discard liners.

b. REPAIR

Refer to TM 9-237 for instruction on shop van body repair.

c. INSTALLATION

WARNING

Stand clear of lifting device when raising or lowering shop van body (1). Failure to follow this warning may result in serious injury or death.

1. Position two new liners (3) on chassis (5).
2. Carefully lift shop van body (1) on chassis (5).
3. Install eight screws (2) and new locknuts (4) on shop van body (1) and chassis (5).

5-10. SHOP VAN BODY MAINTENANCE (Con't).

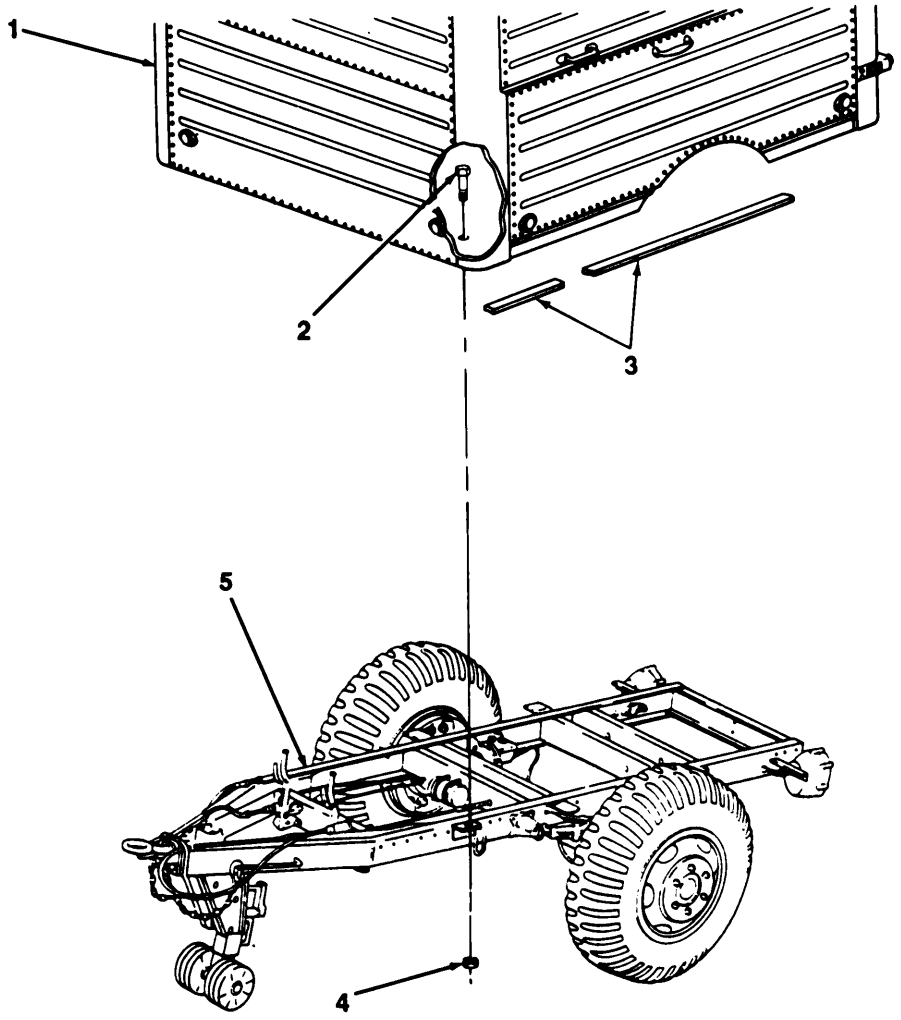

TA506373

APPENDIX A
REFERENCES

A-1. SCOPE.

This appendix lists all forms, field manuals, technical manuals, and other publications referenced in this manual and which apply to the operation, organizational, direct, and general support maintenance of the M103, M105, M107, and M448 Series Trailers.

A-2. PUBLICATION INDEX.

DA Pam 25-30, Consolidated Index of *Army Pub//cat/ens and Blank Forms,* should be consulted frequently for latest changes or revisions and for new publications relating to materiel covered in this technical manual.

A-3. FORMS.

Refer to DA Pam 738-750, *The Army Maintenance Management System (TAMMS),* for instructions on the use of maintenance forms.

Equipment Inspection and Maintenance Worksheet.....DA Form 2404
Equipment Log Assembly (Records).....DA Form 2408
Maintenance Request .....DA Form 2407
Organizational Control Record for Equipment .....DA Form 2401
Preventive Maintenance Schedule and Record .....DD Form 314
Processing and Reprocessing Record for Shipment, Storage,
and Issue of Vehicles and Spare Engines .....DD Form 1397
Product Quality Deficiency Report .....SF 368
Recommended Changes to Equipment Technical Publications .....DA Form 2028-2
Recommended Changes to Publications and Blank Forms.....DA Form 2028

A-4. FIELD MANUALS.

Field Hygiene and Sanitation .....FM 21-10
First Aid for Soldiers.....FM 4-25.1 (Army)
Manual for the Wheeled Vehicle Diver.....FM 21-305
NBC Contamination Avoidance.....FM 3-3
NBC Decontamination .....FM 3-5
NBC Protection FM3-4
Operation and Maintenance of Ordnance Materiel in Cold Weather
(0° to -65°F) .....FM 9-207

A-5. SUPPLY BULLETINS.

Storage Serviceability Standard: Tracked Vehicles,
Wheeled Vehicles, and Component Parts.....SB740-98-1

A-6. TECHNICAL BULLETINS.

Color, Marking, and Camouflage Painting of Military Vehicles,
Construction Equipment, and Materiels Handling Equipment.....TB 43-0209

A-6. TECHNICAL BULLETINS (Con't).

Equipment Improvement Report and Maintenance Digest
(U.S. Army Tank-Automotive Command) Tank-Automotive Equipment .....TB 43-0001 -39
Series Maintenance in the Desert .....TB 43-0239
Occupational and Environmental Health: Sanitary Control and
Surveillance of Field Water Supplies .....TM MED577
Tactical Wheeled Vehicles: Repair of Frames .....TB 9-2300-247-40

A-7. TECHNICAL MANUALS.

Deepwater Fording of Ordnance Materiel .....TM 9-238
Inspection, Care, and Maintenance of Antifriction Bearings .....TM 9-214
Materials Used for Cleaning, Preserving, Abrading,
and Cementing Ordnance Materiel and Related Items including Chemicals.....TM 9-247
Operator's and Organizational Maintenance Manual (Including RPSTL)
for Heater, Immersion, Liquid Fuel Fired, 35,000 BTU Output for
Corrugated Cans (Military Model M67) .....TM 5-4540-202-12&P
Operator's Manual for Welding Theory and Application.....TM 9-237
Organizational, Direct Support and General Support Care,
Maintenance and Repair of Pneumatic Tires
and lnner Tubes.....TM 9-2610-200-24
Painting instructions for Field Use.....TM 43-0139
Procedures for Destruction of Tank-Automotive
Equipment to Prevent Enemy Use.....TM 750-244-6
Railcar Loading Procedures.....TM 55-601
Railway Operating and Safety Rules .....TM 55-200
Storage and Materials Handling.....TM 743-200-1

A-8. OTHER PUBLICATIONS.

Army Medical Department Expendable/Durable Items CTA8-100
Expendable/Durable Items (Except Medical, Class V,
Repair Parts, and Heraldic items) .....CTA 50-970

APPENDIX B
MAINTENANCE ALLOCATION CHART (MAC)
Section 1: INTRODUCTION

B-1. General

This introduction provides a general explanation of all maintenance and repair functions authorized at the two maintenance levels under the Two-Level Maintenance System concept.

The MAC (immediately following the introduction) designates overall authority and responsibility for the performance of maintenance functions on the identified end item or component. The application of the maintenance functions to the end item or component shall be consistent with the capacities and capabilities of the designated maintenance levels, which are shown on the MAC in column (4) as:

Field — includes two subcolumns, Unit (C (operator/crew) and O (unit) maintenance) and Direct Support (F) maintenance

Sustainment — includes two subcolumns, general support (H) and depot (D)

The tools and test equipment requirements (immediately following the MAC) list the tools and test equipment (both special tools and common tool sets) required for each maintenance function as referenced for the MAC).

The remarks (immediately following the tools and test equipment requirements) contain supplemental instructions and explanatory notes for a particular maintenance function.

B-2. Maintenance Functions

Maintenance functions are limited to and defined as follows:

1. Inspect. To determine the serviceability of an item by comparing its physical, mechanical, and/or electrical characteristics with established standards through examination (e.g.; by sight, sound, or feel). This includes scheduled inspection and gauging and evaluation of cannon tubes.
2. Test. To verify serviceability by measuring the mechanical, pneumatic, hydraulic, or electrical characteristics of an item and comparing those characteristics with prescribed standards on a scheduled basis, i.e., load testing of lift devices and hydrostatic testing of pressure hoses.
3. Service. Operations required periodically to keep an item in proper operating condition, e.g., to clean (includes decontaminate, when required), to preserve, to drain, to paint, or to replenish fuel, lubricants, chemical fluids, or gases. This includes scheduled exercising and purging or recoil mechanisms.
4. Adjust. To maintain or regulate, within prescribed limits, by bringing into proper position, or by setting the operating characteristics to specified parameters.
5. Align. To adjust specified variable elements of an item to bring about optimum or desired performance.
6. Calibrate. To determine and cause corrections to be made or be adjusted on instruments of test, measuring, and diagnostic equipment used in precision measurement. Consists of comparisons of two instruments, one of which is a certified standard of known accuracy, to detect and adjust any discrepancy in the accuracy of the instrument being compared.
7. Remove/Install. To remove and install the same item when required to perform service or other maintenance functions. Install may be the act of emplacing, seating, or fixing into position a spare, repair part, or module (component or assembly) in a manner to allow the proper functioning of an equipment or system.
8. Replace. To remove an unserviceable item and install a serviceable counterpart in its place. “Replace” is authorized by the MAC and assigned maintenance level is shown as the third position code of the Source, Maintenance, and Recoverability (SMR) code.
9. Repair. The application of maintenance services, including fault location/troubleshooting, removal/installation, disassembly/assembly procedures, and maintenance actions to identify troubles and restore serviceability to an item by correcting specific damage, fault, malfunction, or failure in a part, subassembly, module (component or assembly), end item, or system.

APPENDIX B
MAINTENANCE ALLOCATION CHART (MAC)
Section 1: INTRODUCTION (Cont.)

B-2. Maintenance Functions (Cont.)

NOTE

The following definitions are applicable to the "repair" maintenance function services: Inspect, test, service, adjust, align, calibrate, and/or replace.

- Fault location/troubleshooting. The process of investigating and detecting the cause of equipment malfunctioning; the act of isolating a fault within a system of Unit Under Test (UUT).
- Disassembly/assembly. The step-by-step breakdown (taking apart) of a spare/functional group coded item to the level of its least component, that is assigned an SMR code of the level of maintenance under consideration (i.e., identified as maintenance significant).
- Actions. Welding, grinding, riveting, straightening, facing, machining, and/or resurfacing.

10. Overhaul. That maintenance effort (service/action) prescribed to restore an item to a completely serviceable/operational condition as required by maintenance standards in appropriate technical publications. Overhaul is normally the highest degree of maintenance performed by the Army. Overhaul does not normally return an item to "like new" condition.

11. Rebuild. Consists of those services/actions necessary for the restoration of unserviceable equipment to a "like new" condition in accordance with original manufacturing standards. Rebuild is the highest degree of material maintenance applied to Army equipment. The rebuild operation includes the act of returning to zero those age measurements (e.g., hours/miles) considered in classifying Army equipment/components.

Explanation of Columns in the MAC

Column (1) Group Number. Column (1) lists FGC numbers, the purpose of which is to identify maintenance significant components, assemblies, subassemblies, and modules with the Next Higher Assembly (NHA).

Column (2) Component/Assembly. Column (2) contains the item names of components, assemblies, subassemblies, and modules for which maintenance is authorized.

Column (3) Maintenance Function. Column (3) lists the functions to be performed on the item listed in column (2). (For a detailed explanation of these functions, refer to "Maintenance Functions" outlined above).

Column (4) Maintenance Level. Column (4) specifies each level of maintenance authorized to perform each function listed in column (3), by indicating work time required (expressed as man-hours in whole hours or decimals) in the appropriate subcolumn. This work time figure represents the active time required to perform that maintenance function at the indicated level of maintenance. If the number or complexity of the tasks within the listed maintenance function varies at different maintenance levels, appropriate work time figures are to be shown for each level. The work time figure represents the average time required to restore an item (assembly, subassembly, component, module end item, or system) to a serviceable condition under typical field operating conditions. This time includes preparation time (including any necessary disassembly/assembly time), troubleshooting/fault location time, and quality assurance time in addition to the time required to perform the specific tasks identified for the maintenance functions authorized in the MAC. The symbol designations for the various maintenance functions are as follows:

Field:	Sustainment:
C Operator or crew maintenance	H General support maintenance
O Unit maintenance	D Depot maintenance
F Direction support maintenance	

NOTE

The "L" maintenance level is not included in column (4) of the MAC. Functions to this level of maintenance are identified by a work time figure in the "H" column of column (4), and an associated reference code is used in the REMARKS column (6). This code is keyed to the remarks and the SRA complete repair application is explained there.

Column (5) Tools and Equipment Reference Code. Column (5) specifies, by code, those common tool sets (not individual tools), common Test, Measurement and Diagnostic Equipment (TMDE), and special tools, special TMDE and special support equipment required to perform the designated function. Codes are keyed to the entries in the tools and test equipment table.

Column (6) Remarks Code. When applicable, this column contains a letter code, in alphabetical order, which is keyed to the remarks table entries.

APPENDIX B

MAINTENANCE ALLOCATION CHART (MAC)
Section 1: INTRODUCTION (Cont

Explanation of Columns in the Tools and Test Equipment Requirements

Column (1) Tool or Test Equipment Reference Code. The tool or test equipment reference code correlates with a code used in column (5) of the MAC.

Column (2) Maintenance Level. The lowest level of maintenance authorized to use the tool or test equipment.

Column (3) Nomenclature. Name or identification of the tool or test equipment.

Column (4) National Stock Number (NSN). The NSN of the tool or test equipment.

Column (5) Tool Number. The manufacturer's part number, model number, or type number.

Explanation of Columns in the Remarks

Column (1) Remarks Code. The code recorded in column (6) of the MAC.

Column (2) Remarks. This column lists information pertinent to the maintenance function being performed as indicated in the MAC.

Table 1. MAC for TRAILER, CHASSIS, 1 1/2-TON, 2-WHEEL, M103A1

(1) GROUP NUMBER	(2) COMPONENT/ ASSEMBLY	(3) MAINTENANCE FUNCTION	(4) MAINTENANCE LEVEL					(5) TOOLS AND EQPT	(6) REMARKS
			FIELD		SUSTAINMENT				
			UNIT	DS	GS	DEPOT			
			C	O	F	H	D		

Table 2. Tools and Test Equipment for , CHASSIS, 1 1/2-TON, 2-WHEEL, M103A1

(1) TOOLS OR TEST EQUIPMENT	(2) MAINTENANCE LEVEL	(3) NOMENCLATURE	(5) NATIONAL STOCK NUMBER	(6) TOOL NUMBER

Table 3. Remarks for CHASSIS, CHASSIS, 1 1/2-TON, 2-WHEEL, M103A1

REMARK CODES	REMARKS

B-4. EXPLANATION OF COLUMNS IN TOOL AND TEST EQUIPMENT REQUIREMENTS, SECTION III

a. Column 1, Tool or test equipment reference Code. The tool and test equipment reference code correlates with a code used in the MAC, Section II, Column 5.

b. Column 2, Maintenance level. The lowest level of maintenance authorized to use the tool or test equipment.

c. Column 3, Nomencluature. Name or identification of the tool or test equipment.

d. Column 4, National/NATO Stock Number. The National of NATO Stock Number of the tool or test equipment.

e. Column 5, Tool Number. The manufacturer's part number.

APPENDIX B
MAINTENANCE ALLOCATION CHART (MAC)
Section 1: INTRODUCTION (Cont

B-5. EXPLANATION OF COLUMNS IN REMARKS, SECTION IV.

a. Column 1, Reference Code. The code recorded in Column 6, Section II.

b. Column 2. Remarks. This column lists information pertinent to the maintenance function being performed as indicated in the MAC, Section II.

Section II. MAINTENANCE ALLOCATION CHART

(1) GROUP NUMBER	(2) COMPONENT/ ASSEMBLY	(3) MAINTENANCE FUNCTION	(4) FIELD			SUSTAINMENT		(5) TOOLS AND EQUIPMENT	(6) REMARKS
			UNIT		DS	GS	DEPOT		
			C	O	F	H	D		
06	**ELECTRICAL SYSTEM**								
0609	*Blackout, Tail and*	Replace		0.2				1,2, and 3	
	Stoplights	Repair		0.2				1,2, and 3	A
	Composite Marker	Replace		0.2				1,2, and 3	
	Lights	Repair		0.2				1,2, and 3	A
0613	*Chassis Wiring Harness*	Replace		0.5				1,2, and 3	
		Repair		0.5				1,2, and 3	B
	Intervehicular	Test		0.2				1,2, and 3	
	Cable	Replace		0.2				1,2, and 3	
		Repair		0.2				1,2, and 3	B
11	**REAR AXLE**								
1100	*Rear Axle Assembly*	Replace			5.0			1,2, 3, and 7	
12	**BRAKES**								
1201	*Handbrakes*								
	Lever, Handbrake	Adjust	0.2						
		Replace		1.0				1,2, and 3	
	Cables, Handbrake	Service		0.2				1,2, and 3	
		Replace		1.5				1,2, and 3	
1202	*Service Brakes*	Adjust		0.2				1,2, and 3	
	Brakeshoes	Replace		1.3				1,2, 3, and 7	
1204	*Hydraulic Brake System*								
	Master Cylinder	Service		0.2				1,2, and 3	
		Replace		1.5				1,2, and 3	
	Wheel Cylinders	Replace		1.5				1,2,3,7	
	Lines and Fittings (Hydraulic)	Replace		1.5				1,2,3	
1205	*Vacuum System Components*								
	Vacuum Chamber Assembly	Replace		1.5				1,2,3	
	Vacuum Master Cylinder Assembly	Replace		1.5				1,2,3	
	Lines and Fittings	Replace		1.5				1,2,3	

SECTION II. MAINTENANCE ALLOCATION CHART—CONTINUED

(1) GROUP NUMBER	(2) COMPONENT/ ASSEMBLY	(3) MAINTENANCE FUNCTION	(4) FIELD UNIT C	(4) FIELD UNIT O	(4) FIELD DS F	(4) SUSTAINMENT GS H	(4) SUSTAINMENT DEPOT D	(5) TOOLS AND EQUIPMENT	(6) REMARKS
1208	*Airbrake System*								
	Airbrake Chamber	Replace		1.0				1,2,3	
	Air Reservoir	Replace		1.5				1,2,3	
	Couplings	Replace		0.2				1,2,3	
	Filter, Air	Replace		0.5				1,2,3	
	Lines and Fittings	Replace		1.6				1,2,3	
	Emergency Relay Valve	Replace		1.0				1,2,3	
13	**WHEELS**								
1311	*Wheel Assembly*								
	Drum, Brake	Replace		1.0				1,2,3, 7	
		Repair				1.5		1,4	c
	Wheel Hub	Replace		1.5				1,2,3, 7	
		Repair		1.5					
	Wheel Bearings	Service		1.5				1,2,3	
		Adjust		0.5				1,2,3, 7	
		Replace		1.5				1,2,3, 7	
	Oil Seal	Replace		1.0				1,2,3	
	Wheel	Replace	0.4					1	
1313	*Tires and Tubes*								
	Tires	Replace		2.0				1,2,3	
		Repair			2.0			1,4	D
	Tube	Replace		2.0				1,2,3	D
		Repair		1.0					
15	**FRAME, TOWING, ATTACHMENTS, AND DRAWBARS**								
1503	*Pintles and Towing Attachments*	Adjust		0.2					
		Replace		0.5				1,2,3	
	Safety Chains	Replace		0.4				1,2,3	
7507	Landing Gear, *Leveling Jacks*								
	Landing Leg	Replace		1.0				1,2,3	
		Repair		2.0				1,2,3	
	Adjustable Caster Assembly	Replace		1.0				1,2,3	
		Repair		2.0				1,2,3	
	Leveling Jacks	Replace		0.2				1,2,3	
		Repair		1.1				1,2,3	

Section II. MAINTENANCE ALLOCATION CHART—CONTINUED

(1) GROUP NUMBER	(2) COMPONENT/ ASSEMBLY	(3) MAINTENANCE FUNCTION	(4) FIELD UNIT C	(4) FIELD UNIT O	(4) FIELD DS F	(4) SUSTAINMENT GS H	(4) SUSTAINMENT DEPOT D	(5) TOOLS AND EQUIPMENT	(6) REMARKS
16	**SPRINGS AND SHOCK ABSORBERS**								
1601	*Springs*								
	Main Spring	Replace		2.5				1,2,3	
	Auxiliary Spring	Replace		2.5				1,2,3	
18	**BODY**								
7802	*Fenders*	Replace		1.5				1,2,3	E
1810	Cargo Body	Replace Repair			1.5 1.5			1,4,5,6	E
	Tailgate	Replace		0.5				1,2,3	
	Piping	Replace		4.0				1,2,3	
	Manifold Valve	Replace		3.0				1	
	Faucets	Replace		1.0				1,2,3	
1812	*Special Purpose Bodies (M448)*								
	Doors	Replace Repair		1.5 1.5				1,2,3	
	Hinges	Replace		1.5				1,2,3	
	Side Panels	Replace Repair		1.5 1.5				1,2,3 1,2,3	
	Door Bumpers	Replace		1.0				1,2,3	
	Latches	Replace		1.0				1,2,3	
	Seal	Replace		1.0				1,2,3	
	Ventilator	Replace		0.5				1,2,3	
	Circuit Breaker Box and Wiring	Replace Repair		2.8 2.0				1,2,3	
	Circuit Breakers	Test Replace		0.2 1.5				1,2,3 1,2,3	
	Connector, Electrical Receptacle	Test Replace		0.2 1.5				1,2,3 1,2,3	
	Conduit	Replace		3.5				1,2,3	
	Connector Receptacle	Replace		1.0				1,2,3	
	Junction Box	Replace		1.0				1,2,3	
22	**ACCESSORY ITEMS**								
2201	*Canvas*	Replace		0.2				1,2,3	
2202	*Accessory Items*								
	Reflectors	Replace		0.2				1,2,3	
2210	*Data Plates*	Replace		0.2				1,2,3	

SECTION III. TOOLS AND TEST EQUIPMENT REQUIREMENT

(1)	(2)	(3)	(4)	(5)	
REFERENCE CODE	MAINTENACE CATEGORY	NOMENCLATURE	NATIONAL STOCK NUMBER	TOOL NUMBER	
1	O	Tool Kit, General Mechanic's, Automotive	5180-00-177-7033		
2	O	Shop Equipment, Automotive Maintenance and Repair: Organizational Maintenance, Common No. 1, Less Power	4910-00-754-0654		
3	O	Shop Equipment, Automotive Maintenance and Repair: Organizational Maintenance, Common No. 2, Less Power	4910-00-754-0706		
4	F	Shop Equipment, Automotive Maintenance and Repair: Field Maintenance, Supplemental No. 1	4910-00-754-0706		
5	F	Tool Kit, Welder's	5180-00-754-0661		
6	F	Shop Equipment, Welding, Field Maintenance	3470-00-357-7268		
7	O	Locknut Wrench	5120-01-105-8593		

Section IV. REMARKS

REFERENCE CODE	REMARKS
A	Composite light, taillight, stoplight, and blackout light repair is limited to door, preformed packing, gasket, and lamp replacement.
B	Chassis wiring harness and intervehicular cable assembly repair is limited to terminal lug, insulator, shell, and hardware replacement.
C	Brakedrum repair is limited to refacing braking surface using a brakedrum lathe.
D	Refer to TM 9-2610-200-24 for tire and tube repair.
E	Frame, fenders, and body repair consists of welding, straightening, and reconditioning of damaged part or parts.

APPENDIX C
COMPONENTS OF END ITEM AND BASIC ISSUE ITEMS LISTS

Section I. INTRODUCTION

C-1. SCOPE.

This appendix lists Components of End Item and Basic Issue Items for the trailers to help you inventory items required for safe and efficient operation.

C-2. GENERAL.

The Components of End Item and Basic Issue Items Lists are divided into the following sections:

a. Section II. Components of End Item (COEI). This listing is for informational purposes only, and is not authority to requisition replacements. These items are part of the end item, but are removed and separately packaged for transportation or shipment. As part of the end item, these items must be with the end item whenever it is issued or transferred between property accounts. Illustrations are furnished to assist you in identifying the items.

b. Section III. Basic Issue Items (BII). These are the minimum essential items required to place the trailer in operation, to operate it, and to perform emergency repairs. Although shipped separately packaged, BII must be with the trailer during operation and whenever it is transferred between property accounts. The illustrations will assist you with hard-to-identify items. This manual is your authority to request/requisition replacement BII, based upon TOE/MTOE authorizations of the end item.

C-3. EXPLANATION OF COLUMNS.

The following provides an explanation of columns found in the tabular listing:

a. Column (1) - Illustration Number (Illus Number). This column indicates the number of the illustration in which the item Is shown.

b. Column (2) - National Stock Number. Indicates the National Stock Number (NSN) assigned to the item and will be used for requisitioning purposes,

c. Column (3) - Description, Indicates the Federal Item Name and, if required, a description to identify and locate the item. The last line for each item indicates the Commercial and Government Entity (CAGE) Code in parentheses, followed by the part number. If item needed differs for different models of this equipment, the model is shown under the “Usable On Code” heading in this column. These codes are identified as:

Code	*Used On*
701	*M448*

d. Column (4) - Unit of Measure (U/M). Indicates the measure used in performing the actual operational/maintenance function. This measure is expressed by a two-character alphabetical abbreviation (e.g., ea, in., pr).

e. Column (5) - Quantity Required (Qty Rqr). Indicates the quantity of the item authorized to be used with/on the equipment.

Section II. COMPONENTS OF END ITEM

The trailers currently do not have any Components of End Item assigned.

Section III. BASIC ISSUE ITEMS

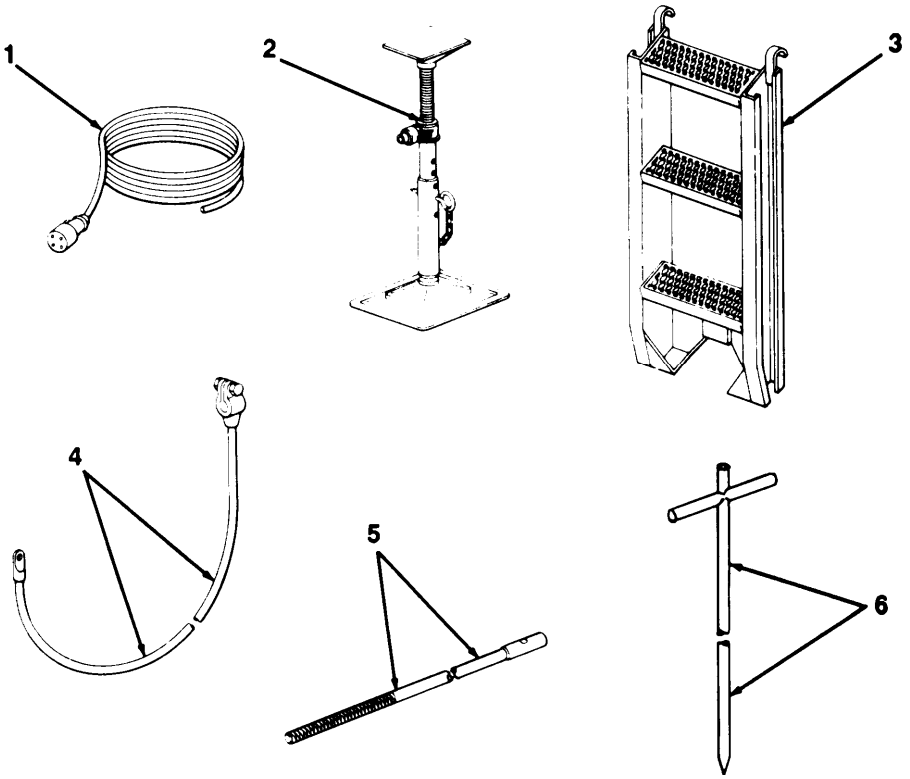

(1) Illus Number	(2) National Stock Number	(3) Description CAGE and Part Number	Usable on Code	(4) U/M	(5) Qty Rqr'd
1	2590-00-790-2297	Cable Assembly, Power, Electrical (19207) 10885376	701	ea	1
2	2590-00-491-6856	Jack, Leveling, Support (19207) 10885200	701	ea	2
3	2540-00-961-1307	Ladder, Vehicle Boarding (19207) 10885309	701	ea	1
4	6140-00-792-8294	Lead, Storage Battery (19207) 7335514	701	ea	1
5	2590-00-790-2293	Lever, Manual Control (19207) 7534675	701	ea	1
6	2510-00-790-2296	Rod Assembly, Trailer (19207) 8380403	701	ea	1

TA505374

APPENDIX D
ADDITIONAL AUTHORIZATION LIST

There currently is no Additional Authorization List assigned to the trailers.

APPENDIX E
EXPENDABLE/DURABLE SUPPLIES AND MATERIALS LIST

Section I. INTRODUCTION

E-1. SCOPE.

This appendix lists expendable/durable supplies and materials you will need to operate and maintain the trailers. This listing is for informational purposes only and is not authority to requisition the listed items. These items are authorized to you by CTA 50-970, Expendable/Durable Items (Except Medical, *Class V,* Repair Parts, *and Heraldic Items),* or CTA 8-100, *Army Medical Department Expendable/Durable Items.*

E-2. EXPLANATION OF COLUMNS.

a. Column (1)- Item Number. This number is assigned to the entry in the listing and is referenced in the" Initial Setup" of maintenance paragraphs or narrative instructions to identify the material needed (e.g., Dry cleaning solvent, Item 6, Appendix E).

b. Column (2)- Level. This column identifies the lowest level of maintenance that requires the listed item.

C - Operator/Crew
O - Unit Maintenance
F - Direct Support Maintenance
H - General Support Maintenance

c. Column (3) - National Stock Number. This is the National Stock Number assigned to the item; use it to request or requisition the item.

d. Column (4) - Description. Indicates the Federal item Name and , if required, a description to identify the item. The last line for each item indicates the Commercial and Government Entity (CAGE) in parentheses followed by the part number, if applicable.

e. Column (5) - Unit of Measure (U/M). indicates the measure used in performing the actual maintenance function. This measure is expressed by a two-character alphabetical abbreviation (e. g., ea, in., pr). If the unit of measure differs from the unit of issue, requisition the lowest unit of issue that will satisfy your requirements.

Section II. EXPENDABLE/DURABLE SUPPLIES AND MATERIALS LIST

(1) Item Number	(2) Level	(3) National Stock Number	(4) Description	(5) U/M
1	0		Barrier Material, Greaseproofed-Waterproofed, Flexible (81349) MIL-B-121	
		8135-00-171-0930	100-Yard Roll	yd
2	0		Brake Fluid, Automotive (81 349) MIL-B-46176	
		9150-01-102-9455	1-Gallon Can	gi
		9150-01-123-3152	5-Gallon Can	gl
		9150-01-072-8379	55-Gallon Can	gl
3	F		Brush, Scrub (81348) H-B-1490	
		7920-00-061-0038		ea
4	F		Cloth, Abrasive (58536) A-A-1206	
		5350-00-221-0872	50 Sheets	ea
5	0		Dishwashing Compound, Hand (81348) P-D-410	
		7930-00-899-9534	5-Gallon Can	gi
6	0		Dry Cleaning Solvent (81348) P-D-680, Type ll	
		6850-00-664-5685	1-Quart Can	qt
		6850-00-281-1985	1-Gallon Can	gl
		6850-00-285-8011	55-Gallon Drum	gl
7	0		Grease, Automotive and Artillery (81349) MIL-G-10924	
		9150-00-935-1017	14-Ounce Can	oz
		9150-00-190-0904	1.75-Pound Can	lb
		9150-00-190-0905	6.50-Pound Can	lb
8	0		Lubricating Oil, Engine, OE/HDO-10 (81349) MIL-L-2104	
		9150-00-189-6727	1-Quart Can	qt
		9150-00-186-6668	5-Gallon Can	gl
		9150-00-191-2772	55-Gallon Drum	gl

Section II. EXPENDABLE/DURABLE SUPPLIES AND MATERIALS LIST (Con't)

(1) Item Number	(2) Level	(3) National Stock Number	(4) Description	(5) U/M
9	0		Lubricating Oil, Engine, OE/HDO-30 (81349) MIL-L-2104	
		9150-00-186-6681	1-Quart Can	qt
		9150-00-188-9858	5-Gallon Can	gl
		9150-00-189-6729	55-Gallon Drum	gl
10	0		Lubricating Oil, Engine, OEA (81349) MIL-L-46167	
		9150-00-402-4478	1-Quart Can	qt
		9150-00-402-2372	5-Gallon Can	gl
		9150-00-491-7197	55-Gallon Drum	gl
11	c		Rag, Wiping (58536) A-A-531	
		7920-00-205-1711	50-Pound Bale	lb
12	F		Sand, Sandblast	
		5350-00-638-8138	50-Pound Drum	lb
13	0		Scouring Powder (81348) P-S-311	
		7930-00-205-0442	14-Ounce Can	oz
14	F		Sodium Hypochlorite Solution (81348) 0-S-602	
		6810-00-900-6276	5-Gallon Can	gl
15	0		Solder, Lead (81348) QQ-S-571	
			1-Pound Bar	lb
16	0		Tag, Marker (81349) MIL-T-12755	
		9905-00-537-8954	50 Each	ea
17	0		Tape, Antiseize	
		8030-00-067-7368	(71643) TEMPRTH 1/4-inch Wide, 54 Feet Long	ft
		8030-00-889-3535	(76381) 4B 1/2-inch Wide, 260 Inches Long	in.

APPENDIX F
REPAIR PARTS AND SPECIAL TOOLS LISTS

Section I. INTRODUCTION

F-1. SCOPE.

This RPSTL lists and authorizes spares and repair parts; special tools; special test, measurement, and diagnostic equipment (TMDE); and other special support equipment required for performance of organizational, direct support, and general support maintenance of the Chassis, Cargo, Water Tank, and Shop Van Trailers. It authorizes the requisitioning, issue, and disposition of spares, repair parts and special tools as indicated by the source, maintenance and recoverability (SMR) codes.

F-2. GENERAL.

In addition to Section 1, Introduction, this Repair Parts and Special Tools List is divided into the following sections:

a. Section II. **Repair Parts List.** A list of spares and repair parts authorized by this RPSTL for use in the performance of maintenance. The list also includes parts which must be removed for replacement of the authorized parts. Parts lists are composed of functional groups in ascending alphanumeric sequence, with the parts in each group listed in ascending figure and item number sequence. Bulk materiels are listed in item name sequence. Repair parts kits are listed separately in their own functional group within Section II. Repair parts for reparable special tools are also listed in this section. Items listed are shown on the associated illustration (s)/figure(s).

b. **Section III. Special Tools List.** A list of special tools, special TMDE, and other special support equipment authorized by this RPSTL [as indicated by Basis of Issue (BOI) information in the *DESCRIPTION AND USABLE ON CODE* column] for the performance of maintenance.

c. **Section** IV. **National Stock Number and Part Number Index.** A list, in National Item Identification Number (NIIN) sequence, of all National stock numbered items appearing in the listing, followed by a list in alphanumeric sequence of all part numbers appearing in the listings. National stock numbers and part numbers are cross-referenced to each illustration/figure and item number appearance. The figure and item number index lists figure and item numbers in alphanumeric sequence and cross-references NSN, CAGE, and part numbers.

F-3. EXPLANATION OF COLUMNS (SECTIONS II AND III).

a. ITEM NO. [Column (1)]. Indicates the number used to identify items called out in the illustration.

b. **SMR CODE [Column (2)].** The Source, Maintenance, and Recoverability (SMR) code is a 5-position code containing supply/requisitioning information, maintenance category authorization criteria, and disposition instruction, as shown in the following breakout:

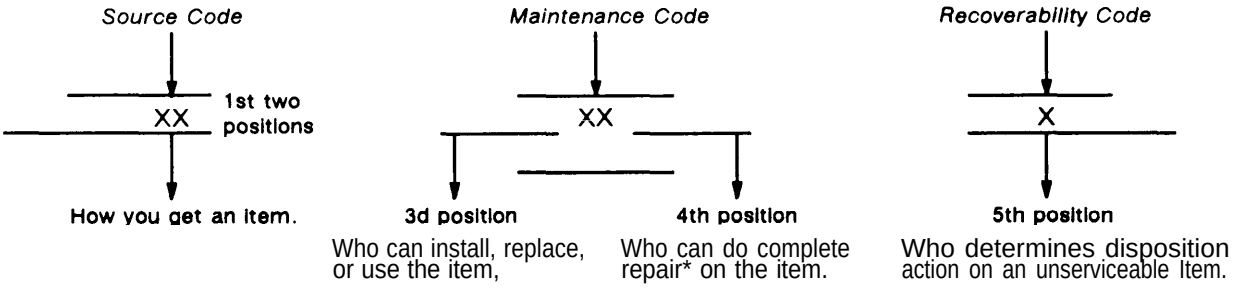

• *Complete Repair:* Maintenance capacity, capability, and authority to perform all corrective maintenance tasks of the *"Repair"* function in a use/user environment In order to restore serviceability to a failed Item.

F-3. EXPLANATION OF COLUMNS (SECTIONS II AND III) (Con't).

(1) Source Code, The source code tells you how to get an item needed for maintenance, repair, or overhaul of an end item/equipment. Explanations of source codes follow:

Code	*Application/Exp\anation*
PA PB PC** PD PE PF PG	Stocked items; use the applicable NSN to request/requisition items with these source codes. They are authorized to the category indicated by the code entered in the 3d position of the SMR code. ** */terns coded PC are subject to deterioration.*
KD KF KB	Items with these codes are not to be requested/requisitioned individually. They are part of a kit which is authorized to the maintenance category indicated in the 3d position of the SMR code. The complete kit must be requisitioned and applied.
MO – Made at ORG/ AVUM Level *MF – Made at DS/AVUM Level* *MH – Made at GS Level* *MD – Made at Depot*	Items with these codes are not to be requested/requisitioned individually. They must be made from bulk materiel which is identified by the part number in the *DESCR/PT/ON AND USABLE ON CODE (UOC)* column and listed in the bulk materiel group of the repair parts list in this RPSTL. If the item is authorized to you by the 3d position code of the SMR code, but the source code indicates it is made at a higher level, order the item from the higher level of maintenance.
AO – Assembled by ORG/AVUM Level *AF – Assembled by DS/ AVUM Level* *AH – Assembled by GS Level* *AD – Assembled at Depot*	Items with these codes are not to be requested/requisitioned individually. The parts that make up the assembled item must be requisitioned or fabricated and assembled at the level of maintenance indicted by the source code. If the 3d position code of the SMR code authorizes you to replace the item, but the source code indicates that the item is assembled at a higher level, order the item from the higher level of maintenance.

NOTE

Cannibalization or controlled exchange, when authorized, may be used as a source of supply for items with the above source codes, except for those source coded "XA."

XA - DO NOT requisition an "XA"-coded item. Order its next higher assembly.

XB - If an "XB" item is not available from salvage, order it using the CAGE and part number given,

F-3. EXPLANATION OF COLUMNS (SECTIONS II AND III) (Con't).

XC - Installation drawing, diagram, instruction sheet, field service drawing, that is identified by manufacturer's part number.

XD - Item is not stocked. Order an " XD''-coded item through normal supply channels using the CAGE and part number given, if no NSN is available.

(2) Maintenance Code. Maintenance codes tell you the level (s) of maintenance authorized to use and repair support items. The maintenance codes are entered in the third and fourth positions of the SMR code as follows:

(a) The maintenance code entered in the third position tells you the lowest maintenance level authorized to remove, replace, and use an item. The maintenance code entered in the third position will indicate authorization to one of the following levels of maintenance.

Code	*Application/Explanation*
C	- Crew or operator maintenance done within unit maintenance or aviation unit maintenance.
O	- Unit maintenance or aviation unit can remove, replace, and use the item.
F	- Direct support or aviation intermediate level can remove, replace, and use the item.
H	- General support level can remove, replace, and use the item.
L	- Specialized repair activity can remove, replace, and use the item.
D	- Depot level can remove, replace, and use the item.

NOTE

Some limited repair may be done on the item at a lower level of maintenance, if authorized by the Maintenance Allocation Chart (MAC) and SMR codes.

(b) The maintenance code entered in the fourth position tells whether or not the item is to be repaired and identifies the lowest maintenance level with the capability to do complete repair (i. e., perform all authorized "Repair" functions). This position will contain one of the following maintenance codes:

Code	*Application lExplana tion*
o	Unit maintenance or aviation unit is the lowest level that can do complete repair of the item.
F	Direct support or aviation intermediate is the lowest level than can do complete repair of the item.
H	General support is the lowest level that can do complete repair of the item.
L	Specialized repair activity is the lowest level that can do complete repair of the item.
D	Depot is the lowest level that can do complete repair of the item.
z	Nonreparable. No repair is authorized.
B	No repair is authorized. (No parts or special tools are authorized for the maintenance of a "B" -coded item.) However, the item may be reconditioned by adjusting, lubricating, etc., at the user level.

F-3. EXPLANATION OF COLUMNS (SECTIONS II AND III) (Con't).

(3) **Recoverability Code.** Recoverability codes are assigned to items to indicate the disposition action on unserviceable items. The recoverability code is entered in the fifth position of the SMR code as follows:

Code	*Application/Explanation*
z	Nonreparable item. When unserviceable, condemn and dispose of the item at the level of maintenance shown in the 3d position of the SMR code.
o	Reparable item. When uneconomically reparable, condemn and dispose of the item at unit maintenance or aviation unit level.
F	Reparable item. When uneconomically reparable, condemn and dispose of the item at the direct support or aviation intermediate level.
H	Reparable item. When uneconomically reparable, condemn and dispose of the item at the general support level.
D	Reparable item. When beyond lower level repair capability, return to depot. Condemnation and disposal of item not authorized below depot level.
L	Reparable item, Condemnation and disposal of item not authorized below specialized repair activity (SRA).
A	Item requires special handling or condemnation procedures because of specific reasons (e. g., precious metal content, high dollar value, critical material, or hazardous material). Refer to appropriate manuals/directives for specific instructions.

c. **CAGEC [Column (3)].** The Commercial and Government Entity (CAGE) Code (C) is a 5-digit alphanumeric code which is used to identify the manufacturer, distributor, or Government agency, etc., that supplies the item.

NOTE

When you use an NSN to requisition an item, the item you receive may have a different part number from the part ordered.

d. PART NUMBER [Column (4)]. Indicates the primary number used by the manufacturer (individual, company, firm, corporation, or Government activity), which controls the design and characteristics of the item by means of its engineering drawings, specifications standards, and inspection requirements to identify an item or range of items.

e. DESCRIPTION AND USABLE ON CODE (UOC) [Column (5)]. This column includes the following information:

(1) The Federal item name and, when required, a minimum description to identify the item.

(2) Physical security classification. Not Applicable.

(3) Items that are included in kits and sets are listed below the name of the kit or set on Figure KIT.

(4) Spare/repair parts that make up an assembled item are listed immediately following the assembled item line entry.

(5) Part numbers for bulk materiels are referenced in this column in the line item entry for the item to be manufactured/fabricated.

(6) When the item is not used with all serial numbers of the same model, the effective serial numbers are shown on the last line(s) of the description (before UOC). (See paragraph 5, *Special information)*

F-3. EXPLANATION OF COLUMNS (SECTIONS II AND Ill) (Con't).

(7) The usable on code, when applicable, (See paragraph F-5, Special Information)

(8) In the Special Tools List section, the Basis of Issue (BOI) appears **as the last line(s) in the entry** for each special tool, special TMDE, and other special support equipment. When density of equipments supported exceeds density spread indicated in the Basis of Issue, the total authorization is increased proportionately.

(9) The statement " END OF FIGURE" appears just below the last item description in Column 5 for a given figure in both Section II and Section Ill.

f. QTY [Column (6)]. The QTY (quantity per figure) column indicates the quantity of the item used in the breakout shown on the Illustration/figure, which is prepared for a functional group, subfunctional group, or an assembly. A " V" appearing in this column in lieu of a quantity indicates that the quantity is variable and the quantity may vary from application to application.

F-4. EXPLANATION OF COLUMNS (SECTION IV).

a, National Stock Number (NSN) Index.

(1) **STOCK NUMBER Column.** This column lists the NSN by National Item Identification Number (NIIN) sequence. The NIIN consists of the last nine digits of the NSN (i.e., $\overset{\text{NSN}}{\overline{53}}\underset{\text{NIIN}}{\overline{0501\ 6/4\ 146/}}$). When using this column to locate an item, ignore the first 4 digits of the NSN. However, the complete NSN should be used when ordering items by stock number.

(2) **FIG. Column.** This column lists the number of the figure where the item is identified/located. The figures are in numerical order in Section II and Section Ill.

(3) **ITEM Column.** The item number identifies the item associated with the figure listed in the adjacent FIG. column. This item is also identified by the NSN listed on the same line.

b. **Part Number Index.** Part numbers in this index are listed by part number in ascending alphanumeric sequence (i.e., vertical arrangement of letter and number combination which places the first letter or digit of each group in order A through Z, followed by the numbers 0 through 9 and each following letter or digit in like order).

(1) **CAGEC Column.** The Commercial and Government Entity (CAGE) Code (C) is a 5-digit alphanumeric code used to identify the manufacturer, distributor, or Government agency, etc., that supplies the item.

(2) **PART NUMBER Column.** Indicates the primary number used by the manufacturer (individual, firm, corporation, or Government activity), which controls the design and characteristics of the item by means of its engineering drawings, specifications standards and inspection requirements to identify an item or range of items.

(3) **STOCK NUMBER Column.** This column lists the NSN for the associated part number and manufacturer identified in the PART NUMBER and CAGE columns to the left.

(4) **FIG. Column.** This column lists the number of the figure where the item is identified/located in Section II and Section Ill.

(5) **ITEM Column.** The item number is that number assigned to the item as it appears in the figure referenced in the adjacent figure number column.

F-5. SPECIAL INFORMATION.

a. **Usable On Code.** The usable on code appears in the lower left corner of the Description column heading. Usable on codes are shown as " UOC: . . . . . " in the Description column (justified left) on the first line applicable item description/nomenclature. Uncoded items are applicable to all models. Identification of the usable on codes used in this RPSTL are:

Code	*Used On*	*Code*	Used *On*
698	M1I05A2C	711	M103A3
701	M448	713	M105A2
702	M103A1	714	M107A2
704	M105A1	715	M107A2C
706	M107A1		

b. **Fabrication Instructions.** Bulk materiels required to manufacture items are listed in the Bulk Materiel Functional Group of RPSTL. Part numbers for bulk materiels are also referenced in the DESCRIPTION column of the line item" entry for the item to be manufactured/fabricated. Detailed fabrication instructions for items source coded to be manufactured or fabricated are found in *Appendix G* of this manual.

c. **Assembly Instructions.** Detailed assembly instructions for items source coded to be assembled from component spare/repair parts are found in *Chapters 4* and 5. Items that make up the assembly are listed immediately following the assembly item entry or reference is made to an applicable figure.

d. **Kits.** Line item entries for repair parts kits appear in group 9401 in Section II. Not Applicable.

e. **index Numbers.** Items which have the word BULK in the FIG. column will have an index number shown in the item column, This index number is **a** cross-reference between the National Stock Number/Part Number Index and the bulk materiel list in Section II.

F-6. HOW TO LOCATE REPAIR PARTS.

a. **When National Stock Number or Part Number is Not Known:**

(1) **First.** Using the Table of Contents, determine the assembly group or subassembly group to which the item belongs, This is necessary since figures are prepared for assembly groups and subassembly groups, and listings are divided into the same groups.

(2) **Second.** Find the figure covering the assembly group or subassembly group to which the item belongs.

(3) **Third.** Identify the item on the figure and use the Figure and Item Number Index to find the NSN.

b. **When National Stock Number or Part Number is Known:**

(1) **First.** Using the National Stock Number or Part Number Index, find the pertinent National Stock Number or Part Number. The NSN Index is in National Item Identification Number (NIIN) sequence [see paragraph F-4a(1)], The part numbers in the Part Number Index are listed in ascending alphanumeric sequence (see paragraph F-4.b), Both indexes cross-reference you to the illustration/figure and item number of the item you are looking for.

(2) **Second.** Turn to the figure and item number, verify that the item is the one you're looking for, then locate the item number in the repair parts list for the figure.

F-7. ABBREVIATIONS.

For standard abbreviations see MIL-STD-I2D, *Military Standard Abbreviations for Use on Drawings, Specifications, Standards, and in Technical Documents.*

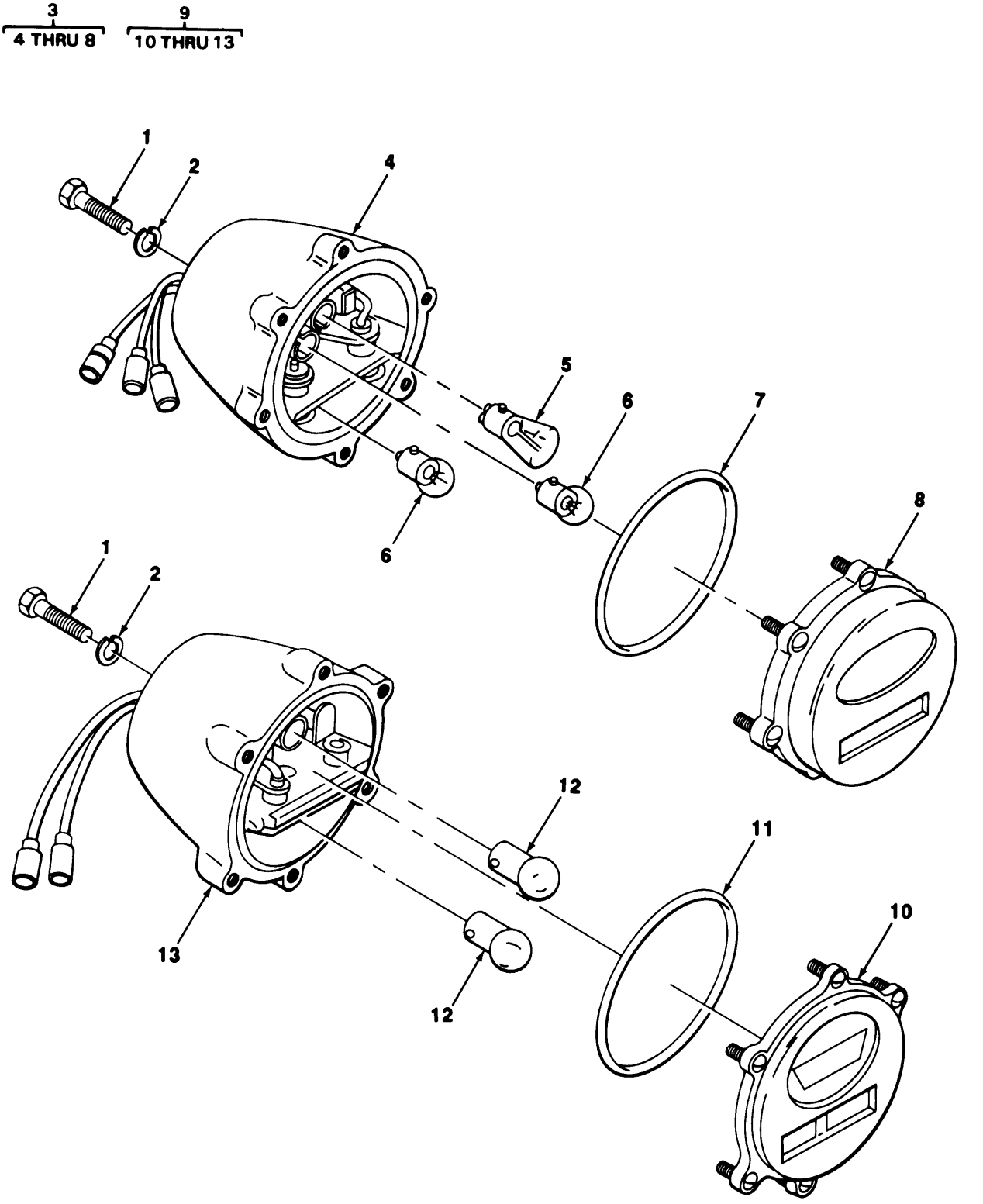

TA503059

FIGURE 1. BLACKOUT TAIL AND STOPLIGHT,

(1) ITEM NO	(2) SMR CODE	(3) CAGEC	(4) PART NUMBER	(5) DESCRIPTION AND USABLE ON CODES(UOC)	(6) QTY
				GROUP 06 ELECTRICAL SYSTEM	
				0609 LIGHTS	
				FIG. 1 BLACKOUT TAIL AND STOPLIGHT	
1	PFOZZ	96906	MS18154-58	SCREW,CAP,HEXAGON H.....	4
2	PAOZZ	81718	H2525M	WASHER,LOCK.....	4
3	PAOOO	96906	MS51329-1	STOP LIGHT-TAILLIGH MODELS M103A1, M105A1,M107A1, USE 1 STOPLIGHT-TAILLIGHT ALL OTHER MODELS USE 2.. UOC:702,704,706	1
3	PAOOO	96906	MS51329-1	STOP LIGHT-TAILLIGH..... UOC:698,701,711,713,714,715	2
4	PAOZZ	96906	MS53047-1	.LIGHT,PARKING.....	1
5	PAOZZ	96906	MS35478-1683	.LAMP,INCANDESCENT.....	1
6	PAOZZ	96906	MS15570-1251	.LAMP,INCANDESCENT.....	2
7	PAOZZ	19207	7320658	.PACKING,PREFORMED.....	1
8	PAOZZ	19207	7526020	.RETAINER,LENS.....	1
9	PFOOO	96906	MS51330-1	STOP LIGHT-TAILLIGH..... UOC:702,704,706	1
10	PAOZZ	19207	7526018	.RETAINER,LENS OUT..... UOC:702,704,706	1
11	PAOZZ	19207	7320658	.PACKING,PREFORMED..... UOC:702,704,706	1
12	PAOZZ	96906	MS35478-1683	.LAMP,INCANDESCENT..... UOC:702,704,706	2
13	PAOZZ	96906	MS53047-1	.LIGHT,PARKING..... UOC:702,704,706	1

END OF FIGURE

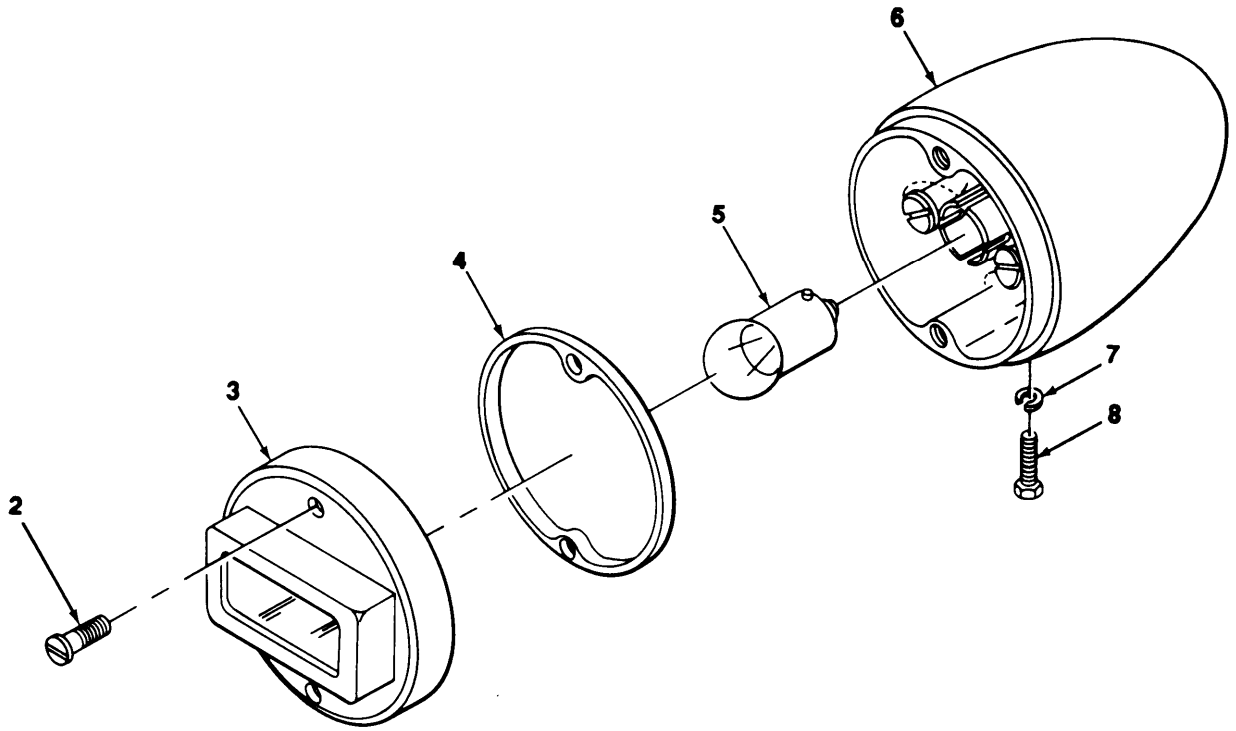

TA503060

FIGURE 2. BLACKOUT STOPLIGHT (M103A3, M105A2, M105A2C, M107A2, M107A2C, M448),

(1) ITEM NO	(2) SMR CODE	(3) CAGEC	(4) PART NUMBER	(5) DESCRIPTION AND USABLE ON CODES(UOC}	(6) QTY
				0609 LIGHTS	
				FIG. 2 BLACKOUT STOPLIGHT (M103A3, M105A2, M105A2C, M107A2, M107A2C, M448)	
1	PAOOO	96906	MS51302-1	STOP LIGHT,VEHICULA BLACKOUT..... UOC:698,701,711,713,714,715	1
2	PAOZZ	96906	MS51959-46	.SCREW,MACHINE..... UOC:698,701,711,713,714,715	2
3	PAOZZ	19207	8741646	.RETAINER,LENS..... UOC:698,701,711,713,714,715	1
4	PAOZZ	73331	5942528	.GASKET..... UOC:698,701,711,713,714,715	1
5	PAOZZ	96906	MS15570-1251	.LAMP,INCANDESCENT..... UOC:698,701,711,713,714,715	1
6	PAOZZ	19207	8741650	.HOUSING,LIGHT..... UOC:698,701,711,713,714,715	1
7	PAOZZ	96906	MS35338-45	WASHER,LOCK..... UOC:698,701,711,713,714,715	1
8	PAOZZ	96906	MS90726-29	BOLT,MACHINE..... UOC:698,701,711,713,714,715	1

END OF FIGURE

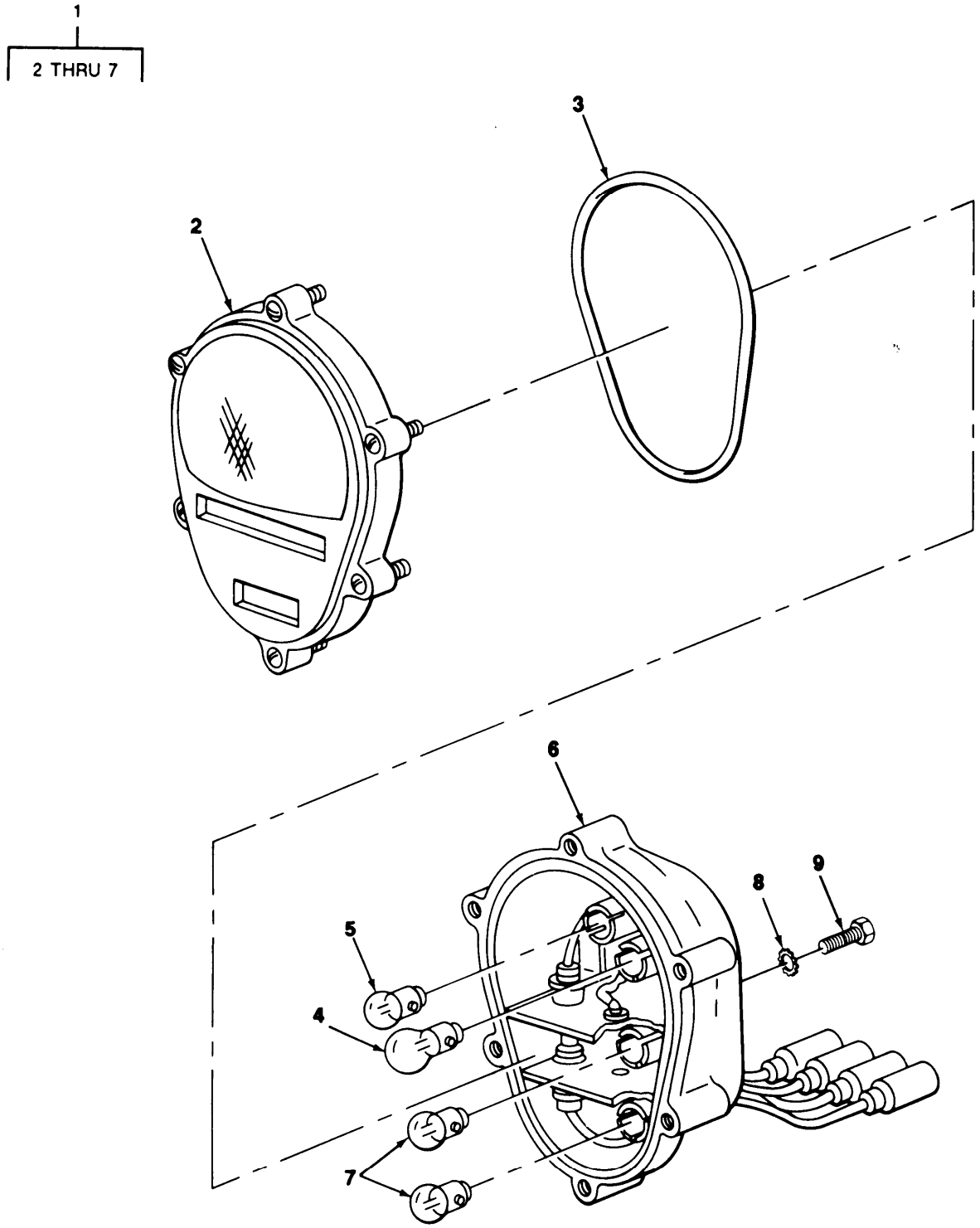

TAS03061

FIGURE 3. REAR COMPOSITE MARKER LIGHT.

(1) ITEM NO	(2) SMR CODE	(3) CAGEC	(4) PART NUMBER	(5) DESCRIPTION AND USABLE ON CODES(UOC)	(6) QTY
				0609 LIGHTS	
				FIG. 3 REAR COMPOSITE MARKER LIGHT	
1	PFOOO	96906	MS52125-2	STOP LIGHT-TAILLIGH CCMPOSITE.....	2
2	PAOZZ	19207	11639535	.LENS,LIGHT.....	1
3	PAOZZ	19207	11639519-2	.PACKING,PREFORMED.....	1
4	PAOZZ	96906	MS35478-1683	.LAMP,INCANDESCENT.....	1
5	PAOZZ	96906	MS15570-623	.LAMP,INCANDESCENT.....	1
6	PAOZZ	19207	11639520	.BODY ASSEMBLY.....	1
7	PAOZZ	96906	MS15570-1251	.LAMP,INCANDESCENT.....	2
8	PAOZZ	96906	MS35338-46	WASHER, LOCK.....	4
9	PAOZZ	96906	MS90728-59	SCREW,CAP,HEXAGON H.....	4

END OF FIGURE

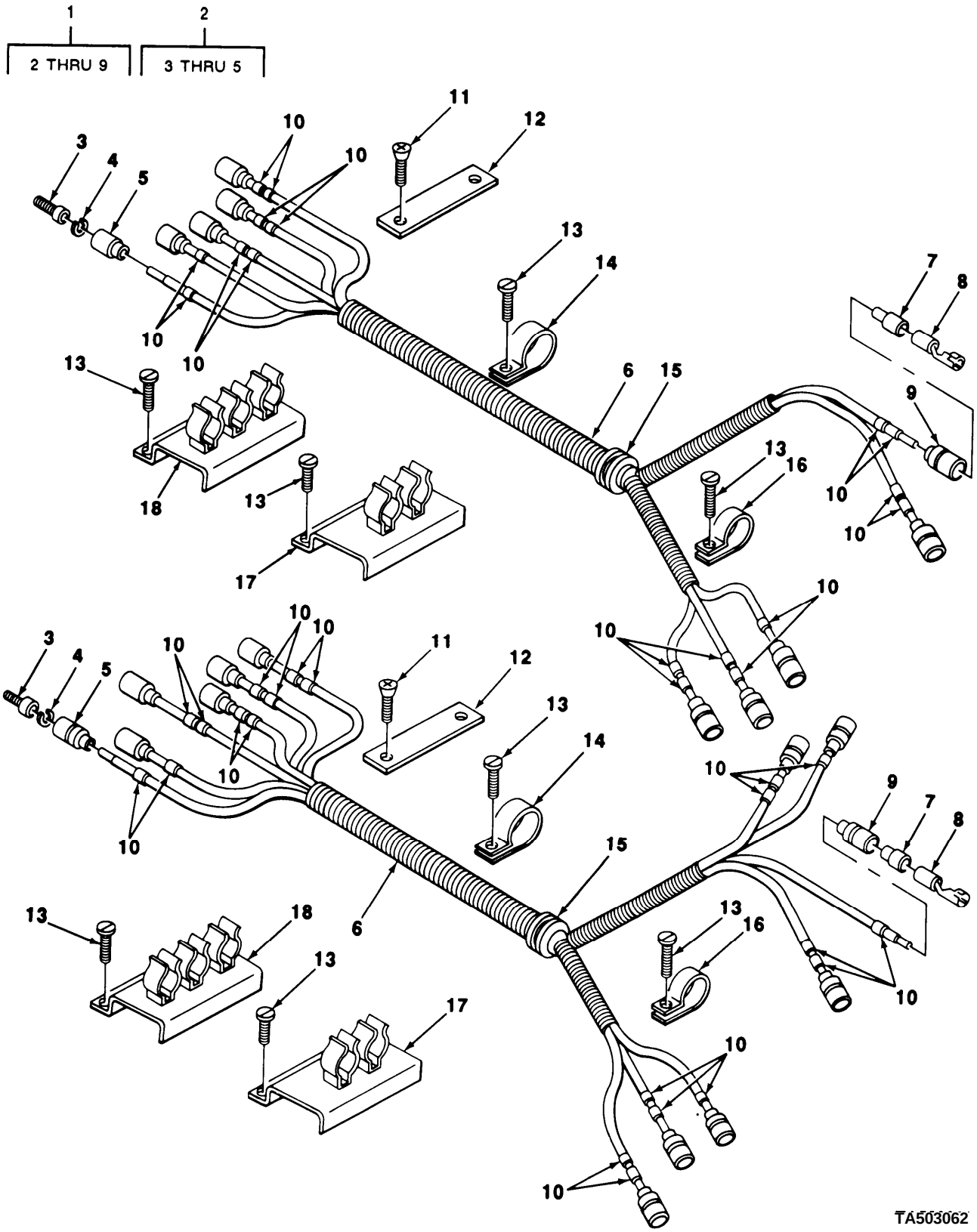

FIGURE 4. CHASSIS WIRING HARNESS.

(1) ITEM NO	(2) SMR CODE	(3) CAGEC	(4) PART NUMBER	(5) DESCRIPTION AND USABLE ON CODES(UOC)	(6) QTY
				0613 HULL OR CHASSIS WIRING HARNESS	
				FIG. 4 CHASSIS WIRING HARNESS	
1	PAOOO	19207	11652182	WIRING HARNESS,BRAN.....	1
				UOC:698,701,711,713,714,715	
2	PAOOO	19207	7760599	.CONNECTOR,PLUG,ELEC.....	5
				UOC:702,704,706	
2	PAOOO	19207	7760599	.CONNECTOR,PLUG,ELEC.....	6
				UOC:698,701,711,713,714,715	
3	PAOZZ	96906	MS27148-2	..CONTACT,ELECTRICAL.....	1
4	PAOZZ	19207	8338567	..WASHER,SLOTTED.....	1
5	PAOZZ	19207	8338566	..SHELL,ELECTRICAL CO.....	1
6	PAOZZ	81349	M13486-1-5	.WIRE,ELECTRICAL.....	V
7	PAOZZ	19207	8338562	.INSULATOR,BUSHING.....	7
				UOC:698,701,711,713,714,715	
7	PAOZZ	19207	8338562	.INSULATOR,BUSHING.....	5
				UOC:702,704,706	
8	PAOZZ	19207	8338564	.TERMINAL ASSEMBLY.....	5
				UOC:702,704,706	
8	PAOZZ	19207	8338564	.TERMINAL ASSEMBLY.....	7
				UOC:698,701,711,713,714,715	
9	PAOZZ	19207	8338561	.SHELL,ELECTRICAL CO.....	5
				UOC:702,704,706	
9	PAOZZ	19207	8338561	.SHELL,ELECTRICAL CO.....	7
				UOC:698,701,711,713,714,715	
10	PFOZZ	96906	MS39020-1	BAND,MARKER.....	16
				UOC:702,704,706	
10	PFOZZ	96906	MS39020-1	BAND,MARKER.....	21
				UOC:698,701,711,713,714,715	
11	PAOZZ	96906	MS24629-47	SCREW,TAPPING,THREA.....	2
12	XDOZZ	19207	7979985-1	STRAP.....	1
13	PAOZZ	96906	MS24629-48	SCREW,TAPPING,THREA.....	12
14	PAOZZ	19207	7979250	CLAMP,LOOP.....	4
15	PAOZZ	96906	MS35489-72	GROMMET,NONMETALLIC.....	1
16	PAOZZ	96906	MS21333-35	CLAMP,LOOP.....	4
17	PAOZZ	19207	8347212	CLIP ASSEMBLY.....	1
18	PAOZZ	19207	8747908	CLIP ASSY,SPRING,TE.....	1
				UOC:702,704,706	
18	PAOZZ	19207	8747909	CLIP ASSY SPRING,TE.....	1
				UOC:698,701,711,713,714,715	
18	PAOZZ	19207	8747908	CLIP ASSY,SPRING,TE.....	2
				UOC:698,701,711,713,714,715	
18	PAOZZ	19207	8347213	CLIP,SPRING TENSION.....	1
				UOC:702,704,706	

END OF FIGURE

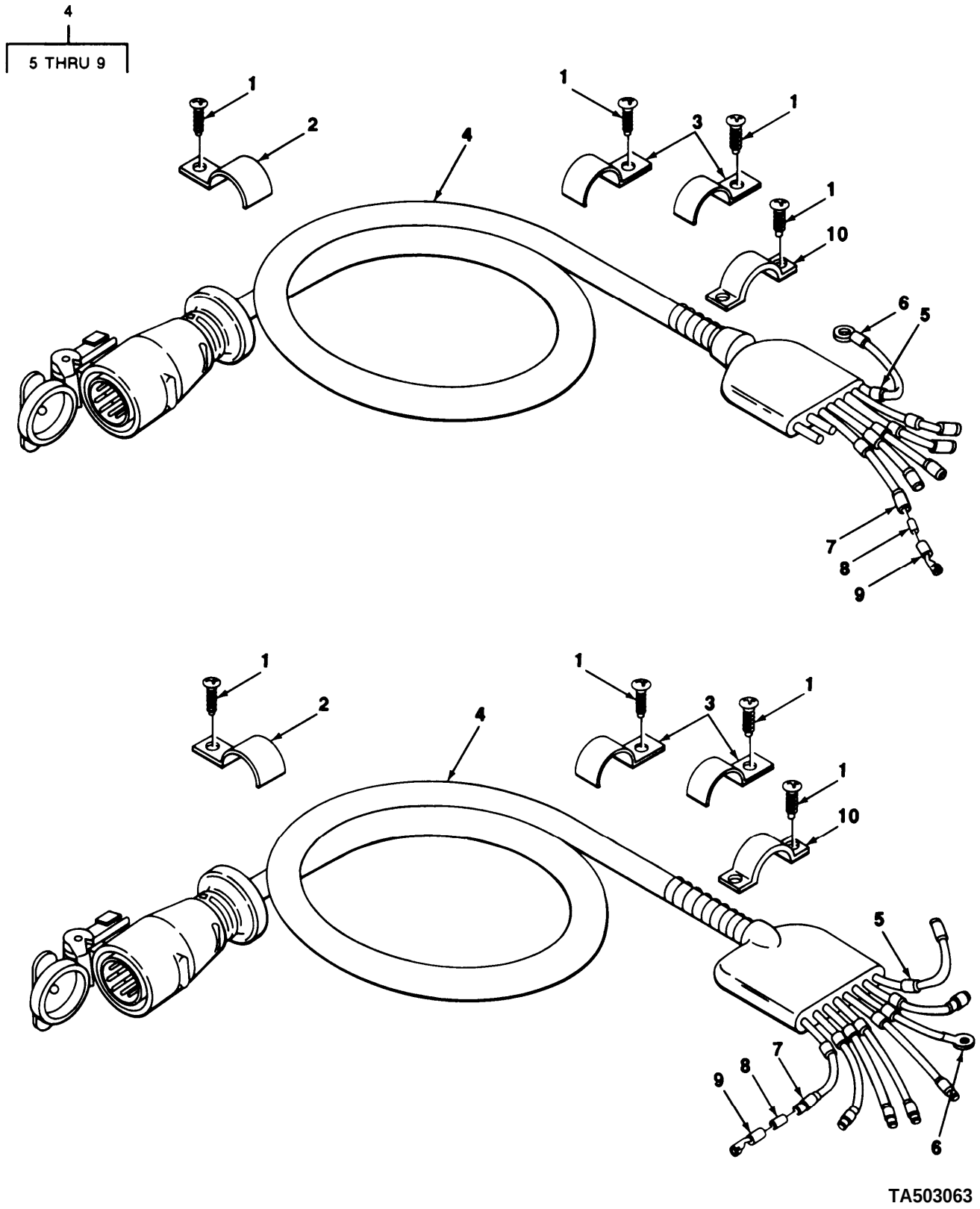

FIGURE 5. INTERVEHICULAR CABLE.

(1) ITEM NO	(2) SMR CODE	(3) CAGEC	(4) PART NUMBER	(5) DESCRIPTION AND USABLE ON CODES(UOC)	(6) QTY
				0613 HULL OR CHASSIS WIRING HARNESS	
				FIG. 5 INTERVEHICULAR CABLE	
1	PAOZZ	96906	MS24629-47	SCREW,TAPPING,THREA.....	5
2	PAOZZ	19207	8331537	STRAP,RETAINING.....	1
3	PAOZZ	19207	8331536	STRAP, RETAINING.....	2
4	PAOOO	19207	8683516	WIRING HARNESS.....	1
				UOC:698,701,711,713,714,715	
4	PAOOO	01475	SW500-43	WIRING HARNESS SAME AS P/N 8683516	1
				EXCEPT WHERE NOTED.....	
				UOC:702,704,706	
5	PFOZZ	96906	MS39020-1	.BAND,MARKER.....	11
				UOC:702,704,706	
5	PFOZZ	96906	MS39020-1	.BAND,MARKER.....	13
				UOC:698,701,711,713,714,715	
6	PAOZZ	96906	MS25036-154	.TERMINAL,LUG.....	5
				UOC:702,704,706	
6	PAOZZ	96906	MS25036-154	.TERMINAL,LUG.....	7
				UOC:698,701,711,713,714,715	
7	PAOZZ	19207	8338561	.SHELL,ELECTRICAL CO.....	5
				UOC:702,704,706	
7	PAOZZ	19207	8338561	.SHELL,ELECTRICAL CO.....	7
				UOC:698,701,711,713,714,715	
8	PAOZZ	19207	8338562	.INSULATOR,BUSHING HARNESS.....	5
				UOC:702,704,706	
8	PAOZZ	19207	8338562	.INSULATOR,BUSHING.....	7
				UOC:698,701,711,713,714,715	
9	PAOZZ	19207	8338564	.TERMINAL ASSEMBLY.....	5
				UOC:702,704,706	
9	PAOZZ	19207	8338564	.TERMINAL ASSEMBLY.....	7
				UOC:698,701,711,713,714,715	
10	PAOZZ	19207	8384191	STRAP,RETAINING.....	1

END OF FIGURE

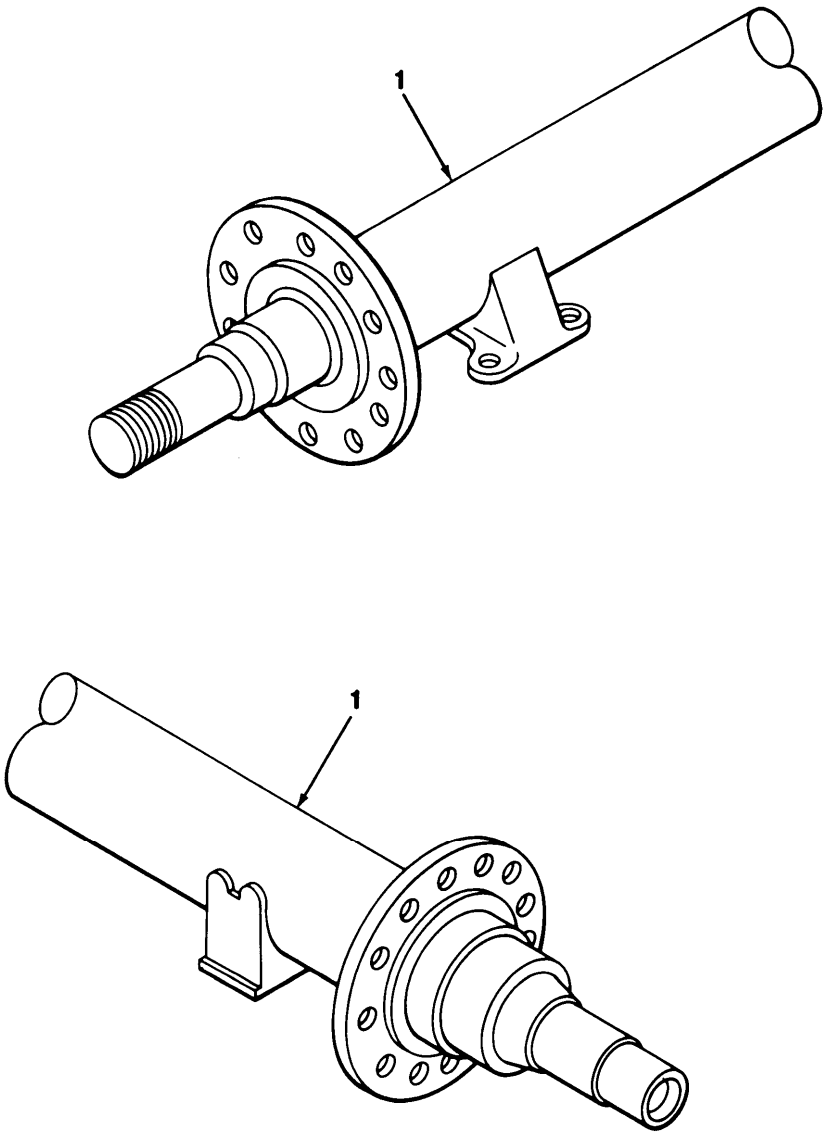

TA503064

FIGURE 6. REAR AXLE.

(1) ITEM NO	(2) SMR CODE	(3) CAGEC	(4) PART NUMBER	(5) DESCRIPTION AND USABLE ON CODES(UOC)	(6) QTY
				GROUP 11 REAR AXLE	
				1100 REAR AXLE ASSEMBLY	
				FIG. 6 REAR AXLE	
1	PAFZZ	78500	A1-3216S981	AXLE,VEHICULAR,NOND WITH FLANGE AND SPRING SEAT..... UOC:702,704,706	1
1	PAFZZ	12603	SA20160	AXLE,VEHICULAR,NOND..... UOC:698,701,711,713,714,715	1

END OF FIGURE

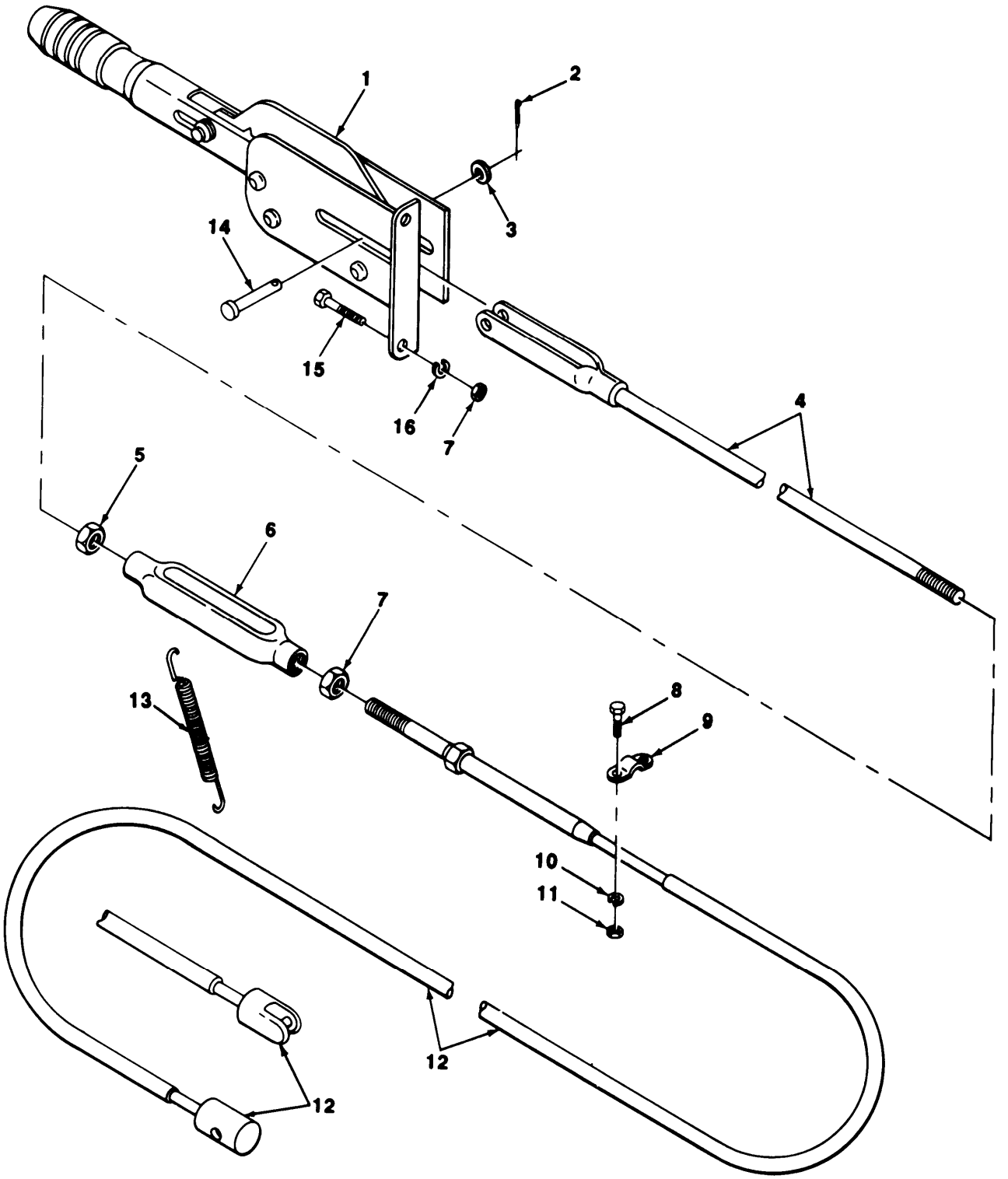

TAS0306S

FIGURE 7. HANDBRAKE CABLES.

(1) ITEM NO	(2) SMR CODE	(3) CAGEC	(4) PART NUMBER	(5) DESCRIPTION AND USABLE ON CODES(UOC)	QTY
				GROUP 12 BRAKES	
				1201 HANDRAKES	
				FIG. 7 HANDBRAKE CABLES	
1	PAOZZ	19207	11652179	LEVER,MANUAL CONTRO.....	2
2	PAOZZ	96906	MS24665-283	PIN,COTTER.....	2
3	PAOZZ	96906	MS27183-12	WASHER,FLAT.....	2
4	PAOZZ	19207	8331944-1	ROD ASSEMBLY,BRAKE.....	4
5	PAOZZ	96906	MS45905-S6	NUT,PLAIN,HEXAGON.....	2
6	PAOZZ	19207	8331946	TURNBUCKLE BODY.....	2
7	PAOZZ	96906	MS51968-8	NUT,PLAIN,HEXAGON.....	4
8	PAOZZ	96906	MS90726-34	BOLT,MACHINE.....	4
9	PAOZZ	19207	5303461	BRACKET,BRAKE CABLE.....	2
10	PAOZZ	96906	MS35338-45	WASHER,LOCK.....	4
11	PAOZZ	96906	MS51968-5	NUT,PLAIN,HEXAGON.....	4
12	PAOZZ	19207	8331941	WIRE ROPE ASSEMBLY,..... UOC:704,706	2
12	PAOZZ	19207	8735522	CONTROL ASSEMBLY,PU..... UOC:698,701,702,711,713,714,715	2
13	PAOZZ	19207	8384055	SPRING,HELICAL HOLDS BRAKE CABLE TO FRAME.....	2
14	XOOZZ	19207	7415746-1	PIN,GROOVED,HEADED.....	2
15	PAOZZ	96906	MS90726-60	SCREW,CAP,HEXAGON H.....	2
16	PAOZZ	96906	MS35338-46	WASHER,LOCK.....	2

END OF FIGURE

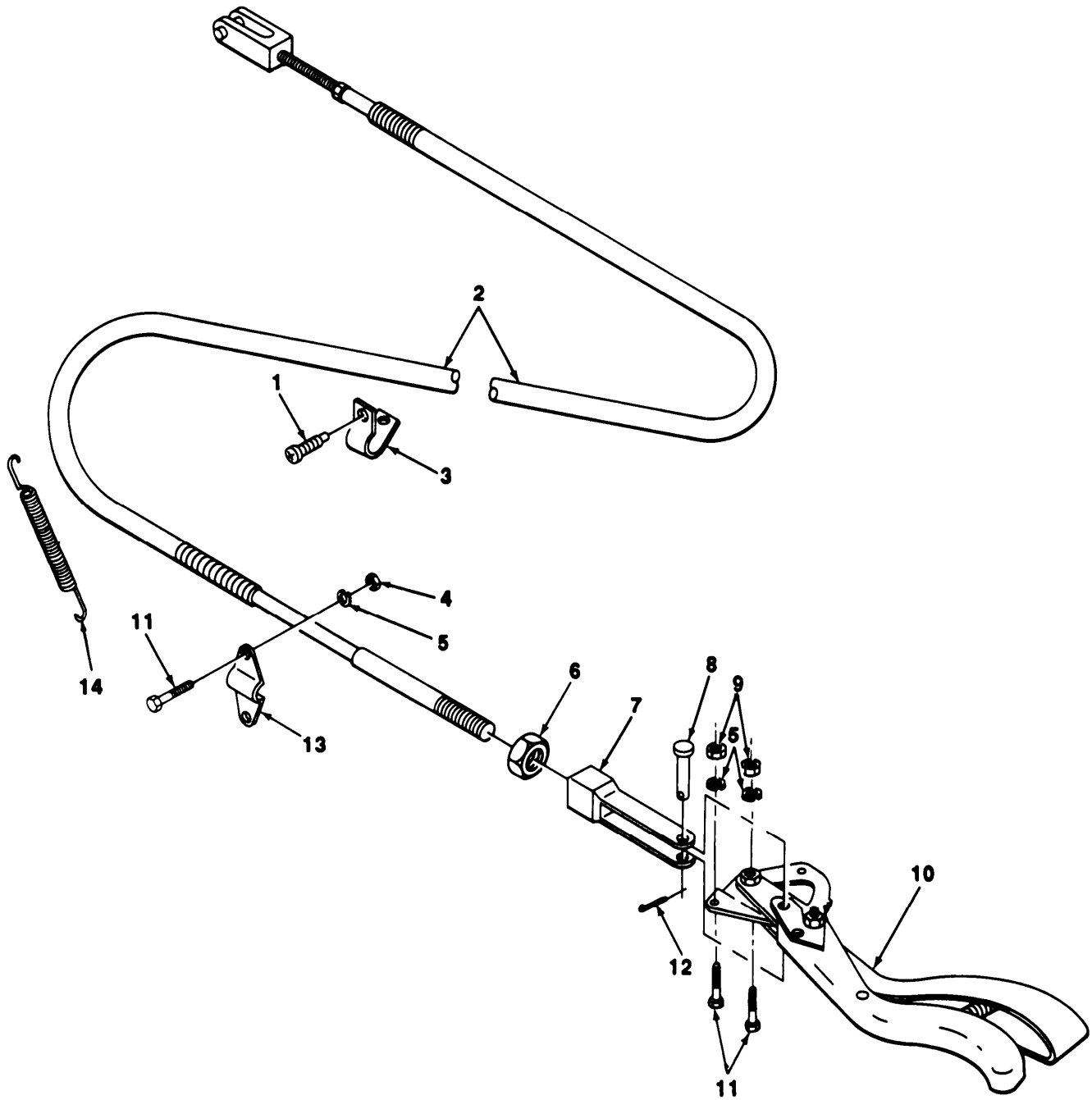

TAS03066

FIGURE 8. HANDBRAKE ASSEMBLY (OPTIONAL FOR MODEL M107A1).

(A) ITEM NO	(2) SMR CODE	(3) CAGEC	(4) PART NUMBER	(5) DESCRIPTION AND USABLE ON CODES(UOC)	(6) QTY
				1201 HANDBRAKES	
				FIG. 8 HANDBRAKE ASSEMBLY (OPTIONAL FOR M107A1)	
1	PAOZZ	21450	441201	SCREW,TAPPING,THREA OPTIONAL FOR MODEL M107A1..... UOC:706	2
2	PAOZZ	23705	A298537	BRAKE CABLE,HAND LE OPTIONAL FOR MODEL M107A1..... UOC:706	2
3	XDOZZ	12204	120526	CLIP OPTIONAL FOR MODEL M107A1..... UOC:706	2
4	XDOZZ	19207	12204	NUT OPTIONAL FOR MODEL M107A1..... UOC:706	4
5	PFOZZ	96906	MS35338-45	WASHER,LOCK OPTIONAL FOR MODEL M107A1..... UOC:706	8
6	PAOZZ	96906	MS51968-8	NUT,PLAIN,HEXAGON OPTIONAL FOR MODEL M107A1..... UOC:706	2
7	PAOZZ	19207	7411008	CLEVIS,ROD END OPTIONAL FOR MODEL M107A1..... UOC:706	2
8	PAOZZ	96906	MS35810-3	PIN, STRAIGHT OPTIONAL FOR MODEL M107A1..... UOC:706	2
9	PAOZZ	96906	MS35690-525	NUT,PLAIN,HEXAGON OPTIONAL FOR MODEL M107A1..... UOC:706	4
10	PFOZZ	23705	A298264	LEVER,MANUAL CONTRO LEFT HAND OPTIONAL FOR MODEL M107A1..... UOC:706	1
10	PFOZZ	23705	A298265	LEVER ASY HAND BRAK RIGHT HAND OPTIONAL FOR MODEL M107A1..... UOC:706	1
11	PAOZZ	96906	MS35292-34	BOLT OPTIONAL FOR MODEL M107A1..... UOC:706	8
12	XDOZZ	19207	108629	COTTER PIN OPTIONAL FOR MODEL M107A1..... UOC:706	2
13	PAOZZ	19207	5303461	BRACKET,BRAKE CABLE OPTIONAL FOR MODEL M107A1..... UOC:706	2
14	PAOZZ	19207	8384055	SPRING,HELICAL,EXTE HOLDS BRAKE CABLE TO FRAME..... UOC:706	2

END OF FIGURE

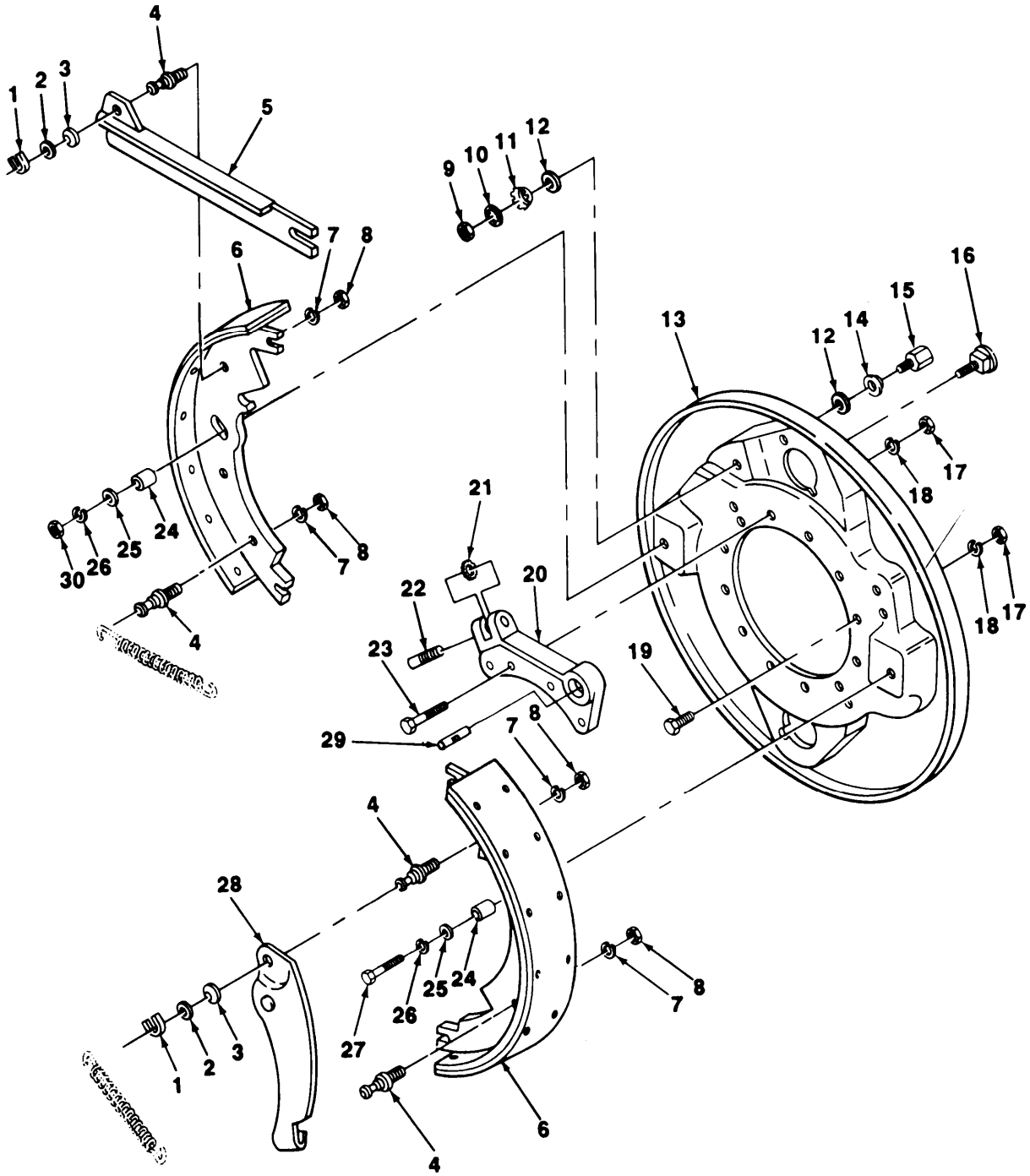

FIGURE 9. SERVICE BRAKES (M105A2C, M448, M103A3, M105A2, M107A2, M107A2C).

(4) ITEM NO	(2) SMR CODE	(3) CAGEC	(4) PART NUMBER	(5) DESCRIPTION AND USABLE ON CODES(UOC)	(6) QTY
				1201 SERVICE BRAKES	
				FIG. 9 SERVICE BRAKES (M105A2, M448, M103A3, M105A2C, M107A2, M107A2C)	
1	PAOZZ	19207	8733937	WASHER,SLOTTED..... UOC:698,701,711,713,714,715	2
2	PAOZZ	19207	8733936	WASHER,FLAT..... UOC:698,701,711,713,714,715	2
3	PAOZZ	19207	8733935	WASHER,SPRING TENSI..... UOC:698,701,711,713,714,715	2
4	PAOZZ	19207	8733938	PIN,SERVICE BRAKE..... UOC:698,701,711,713,714,715	4
5	PAOZZ	19207	8733926	CONNECTING LINK,RIG LEFT HAND USE WITH P/N FE17759..... UOC:698,701,711,713,714,715	1
5	PAOZZ	19207	8733927	LINK EMERGENCY BRAK RIGHT HAND..... UOC:698,701,711,713,714,715	1
6	PAOZZ	19207	7064978	BRAKE SHOE..... UOC:698,701,711,713,714,715	4
7	PFOZZ	96906	MS35335-40	WASHER,LOCK..... UOC:698,701,711,713,714,715	4
8	PAOZZ	96906	MS51970-4	NUT,PLAIN,HEXAGON..... UOC:698,701,711,713,714,715	4
9	PAOZZ	96906	MS35691-13	NUT,PLAIN,HEXAGON..... UOC:698,701,711,713,714,715	4
10	PAOZZ	96906	MS35333-41	WASHER,LOCK..... UOC:698,701,711,713,714,715	4
11	PAOZZ	19207	7412104	PINION,BRAKE SHOE A..... UOC:698,701,711,713,714,715	4
12	PAOZZ	19207	7412120	WASHER,FLAT..... UOC:698,701,711,713,714,715	8
13	PAOZZ	19207	8733933	PLATE,BACKING,BRAKE RIGHT HAND..... UOC:698,701,711,713,714,715	1
13	PAOZZ	78500	A1-3236M1261	PLATE,BACKING,BRAKE LEFT HAND..... UOC:698,701,711,713,714,715	1
14	PAOZZ	19207	8336703	WASHER,SPRING TENSI..... UOC:698,701,711,713,714,715	4
15	PAOZZ	19207	8328033	STUD..... UOC:698,701,711,713,714,715	4
16	PAOZZ	19207	7411760	BOLT,SQUARE NECK..... UOC:698,701,711,713,714,715	2
17	PAOZZ	96906	MS51968-8	NUT,PLAIN,HEXAGON..... UOC:698,701,711,713,714,715	24
18	PAOZZ	96906	MS35335-35	WASHER,LOCK..... UOC:698,701,711,713,714,715	24
19	PAOZZ	96906	MS90726-65	SCREW,CAP,HEXAGON H..... UOC:698,701,711,713,714,715	16
20	PAOZZ	19207	8733908	SUPPORT ASSY LEFT HAND..... UOC:698,701,711,713,714,715	2
20	PAOZZ	19207	8733909	SUPPORT ASSEMBLY RIGHT HAND..... UOC:698,701,711,713,714,715	2

(1) ITEM NO	(2) SMR CODE	(3) CAGEC	(6) PART NUMBER	(5) DESCRIPTION AND USABLE ON CODES(UOC)	(6) QTY
21	PAOZZ	19207	8336704	WHEEL,SLACK ADJUSTE..... UOC:698,701,711,713,714,715	4
22	PAOZZ	19207	8336705	SCREW,BRAKE SHOE AD LEFT HAND..... UOC:698,701,711,713,714,715	2
22	XDOZZ	19207	8336789	SCREW,BRAKE SHOE AD RIGHT HAND..... UOC:698,701,711,713,714,715	2
23	PAOZZ	96906	MS90726-61	SCREW,CAP,HEXAGON H..... UOC:698,701,711,713,714,715	8
24	PAOZZ	19207	7412103	SPACER,SLEEVE..... UOC:698,701,711,713,714,715	2
25	PAOZZ	19207	5323088	WASHER,FLAT..... UOC:698,701,711,713,714,715	4
26	PAOZZ	96906	MS35338-44	WASHER,LOCK..... UOC:698,701,711,713,714,715	4
27	PAOZZ	96906	MS90727-8	SCREW,CAP,HEXAGON H..... UOC:698,701,711,713,714,715	2
28	PAOZZ	19207	8733914	LEVER,RIGHT HAND BR..... UOC:698,701,711,713,714,715	1
28	PAOZZ	19207	8733915	LEVER,LEFT HAND BRA..... UOC:698,701,711,713,714,715	1
29	PAOZZ	19207	7412108	PIN,ANCHOR..... UOC:698,701,711,713,714,715	4
30	PAOZZ	96906	MS51970-1	NUT,PLAIN,HEXAGON..... UOC:698,701,711,713,714,715	2

END OF FIGURE

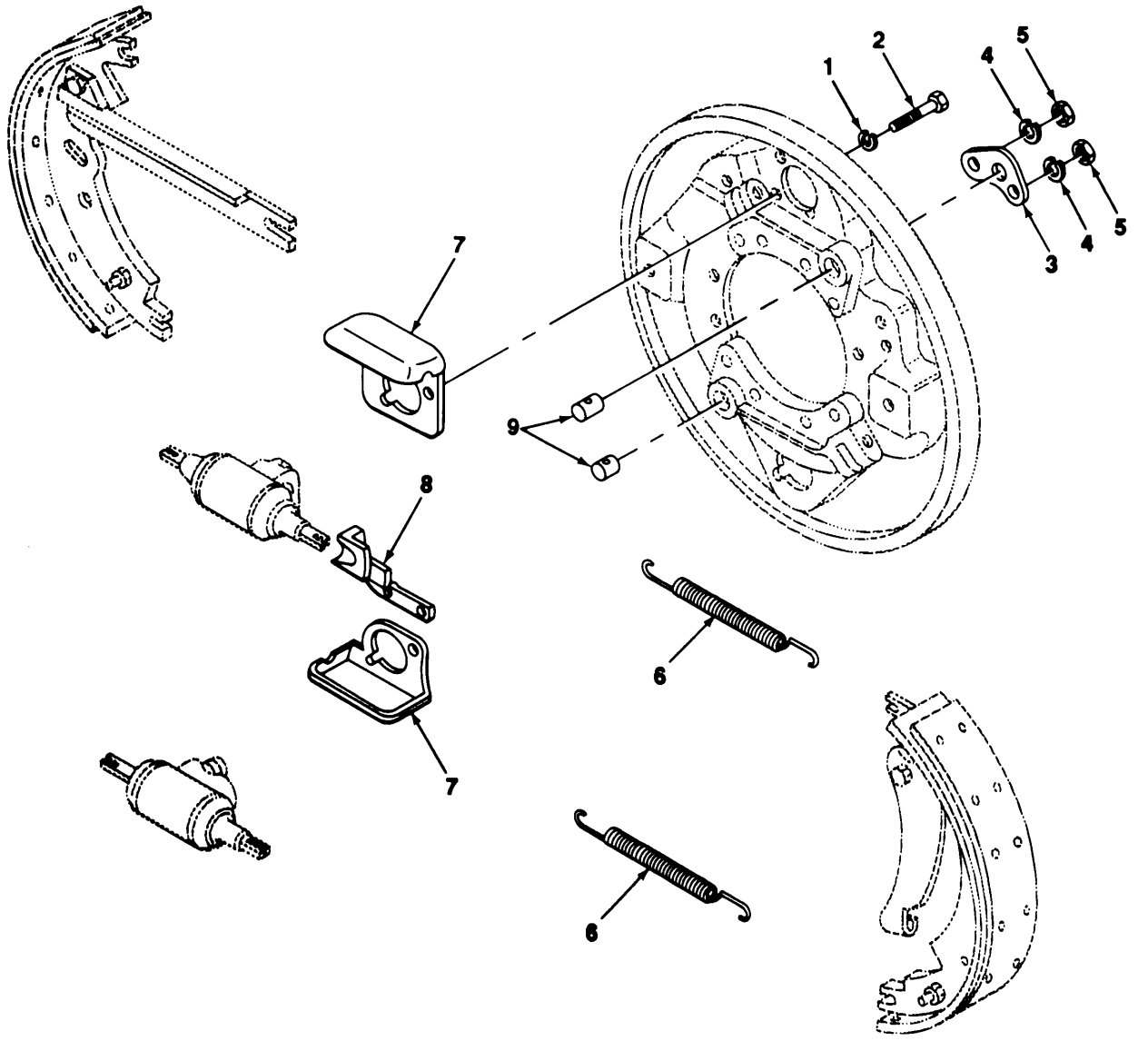

TA503068

FIGURE 10. BRAKE RELATED COMPONENTS (M103A3, M105A2, M105A2C, M107A2, M107A2C, M448).

(1) ITEM NO	(2) SMR CODE	(3) CAGEC	(4) PART NUMBER	(5) DESCRIPTION AND USABLE ON CODES(UOC)	(6) QTY
				1202 SERVICE BRAKES	
				FIG. 10 BRAKE RELATED COMPONENTS (M103A3, M105A2, M105Q2C, M107A2, M107A2C, M448)	
1	PAOZZ	96906	MS35338-45	WASHER,LOCK..... UOC:698,701,711,713,714,715	8
2	PAOZZ	96906	MS90725-31	BOLT,MACHINE..... UOC:698,701,711,713,714,715	8
3	PAOZZ	81240	35P336	BRACKET,LEFT HAND..... UOC:698,701,711,713,714,715	1
3	PAOZZ	19207	8733891	BRACKET,RIGHT HAND..... UOC:698,701,711,713,714,715	1
4	PAOZZ	96906	MS35338-44	WASHER,LOCK..... UOC:698,701,711,713,714,715	4
5	PAOZZ	96906	MS51967-2	NUT,PLAIN,HEXAGON..... UOC:698,701,711,713,714,715	4
6	PAOZZ	19207	8720515	SPRING,HELICAL,EXTE..... UOC:698,701,711,713,714,715	4
7	PAOZZ	19207	7412068	SHIELD,BRAKE DISK LEFT HAND..... UOC:698,701,711,713,714,715	2
7	PAOZZ	19207	7412050	SHIELD,BRAKE DISK RIGHT HAND..... UOC:698,701,711,713,714,715	2
8	PAOZZ	19207	8733892	RAMP,CABLE LEFT HAND..... UOC:698,701,711,713,714,715	1
8	PAOZZ	19207	8733893	RAMP,BRAKE CABLE RIGHT HAND..... UOC:698,701,711,713,714,715	1
9	PAOZZ	78500	1259-4-182	PIN,STRAIGHT,HEADLE..... UOC:698,701,711,713,714,715	4

END OF FIGURE

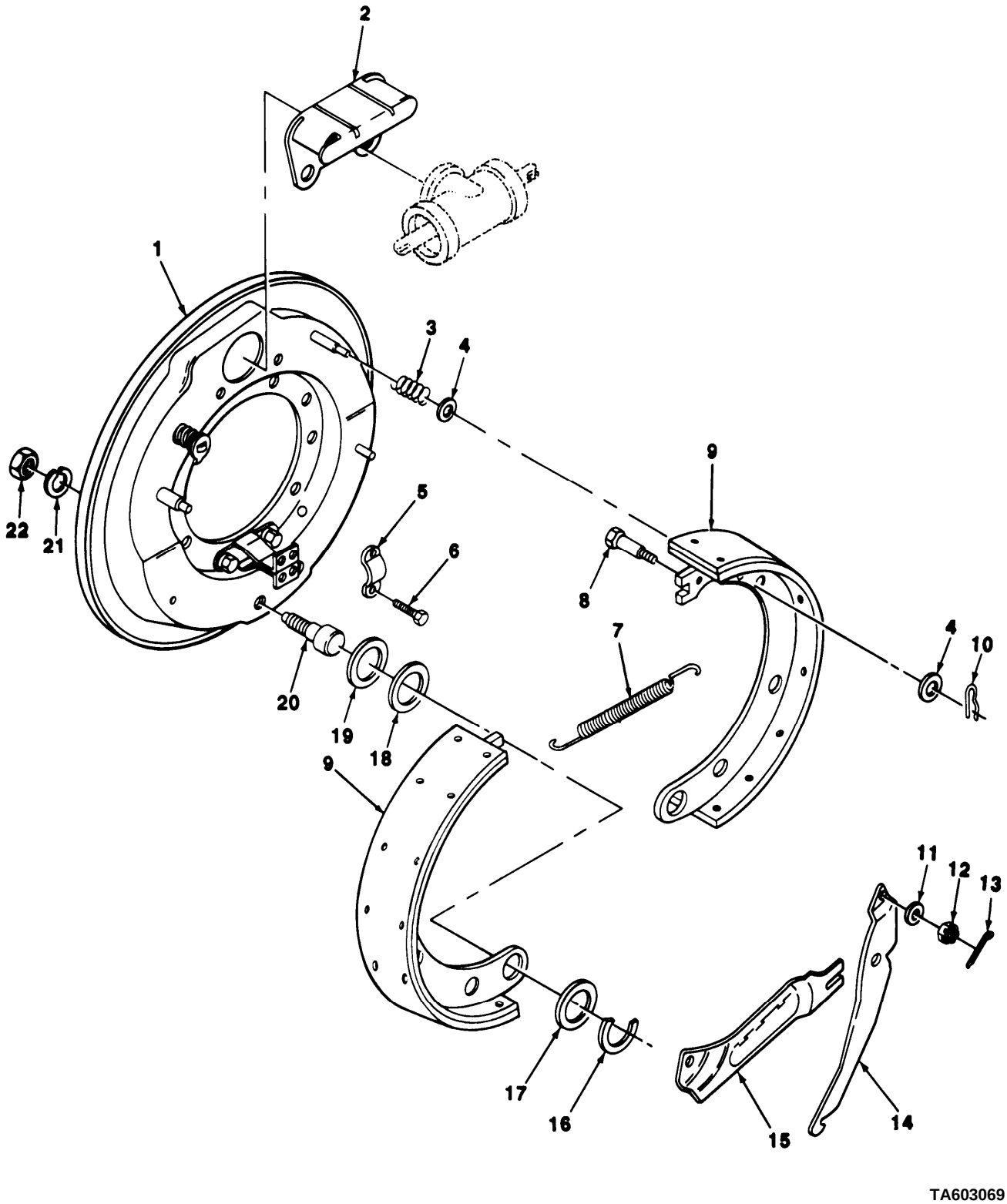

FIGURE 11. SERVICE BRAKES (M103A1, M105A1, M107A1),

(1) ITEM NO	(2) SMR CODE	(3) CAGEC	(6) PART NUMBER	(5) DESCRIPTION AND USABLE ON CODES(UOC)	(6) QTY
				1202 SERVICE BRAKES FIG. 11 SERVICE BRAKES (M103A1, M105A1, M107A1)	
1	PAOZZ	23705	A298531	PLATE,BACKING,BRAKE..... UOC:702,704,706	2
2	XBOZZ	19207	8238375	SHIELD..... UOC:702,704,706	2
3	PAOZZ	19207	7061304	SPRING,HELICAL,COMP..... UOC:702,704,706	8
4	PAOZZ	23705	298506	WASHER,FLAT..... UOC:702,704,706	16
5	PAOZZ	19207	7411006	STRAP,RETAINING..... UOC:702,704,706	2
6	PAOZZ	12204	120741	BOLT,MACHINE..... UOC:702,704,706	4
7	PAOZZ	19207	7411017	SPRING,HELICAL,EXTE..... UOC:702,704,706	2
8	PAOZZ	23705	301638	BOLT,SHOULDER..... UOC:702,704,706	4
9	PAOZZ	19207	12301170	BRAKE SHOE WITH LINING..... UOC:702,704,706	4
10	PAOZZ	19207	8344934	PIN,LOCK..... UOC:702,704,706	8
11	PAOZZ	96906	MS27183-14	WASHER,FLAT..... UOC:702,704,706	2
12	PAOZZ	96906	MS35692-21	NUT,PLAIN,SLOTTED,H..... UOC:702,704,706	2
13	PAOZZ	96906	MS24665-283	PIN,COTTER..... UOC:702,704,706	2
14	PAOZZ	23705	298498	LEVER,LOCK-RELEASE LEFT..... UOC:702,704,706	1
14	PAOZZ	23705	298499	LEVER,LOCK-RELEASE RIGHT..... UOC:702,704,706	1
15	PAOZZ	78500	372-Y-285	STRUT,HYDRAULIC BRA LEFT..... UOC:702,704,706	1
15	PAOZZ	23705	298517	STRUT RIGHT..... UOC:702,704,706	1
16	PAOZZ	19207	5160337	WASHER,SLOTTED..... UOC:702,704,706	4
17	PAOZZ	19207	7521711	WASHER,FLAT..... UOC:702,704,706	4
18	PAOZZ	19207	5160345	WASHER,RECESSED BRAKE ANCHOR..... UOC:702,704,706	4
19	PAOZZ	96906	MS28932C01-03	PACKING MATERIAL..... UOC:702,704,706	4
20	XDOZZ	19207	5160341	ANCHOR PIN,BRAKE..... UOC:702,704,706	4
21	PAOZZ	96906	MS35338-51	WASHER,LOCK..... UOC:702,704,706	4
22	PAOZZ	96906	MS35690-1224	NUT,PLAIN,HEXAGON..... UOC:702,704,706	4

END OF FIGURE

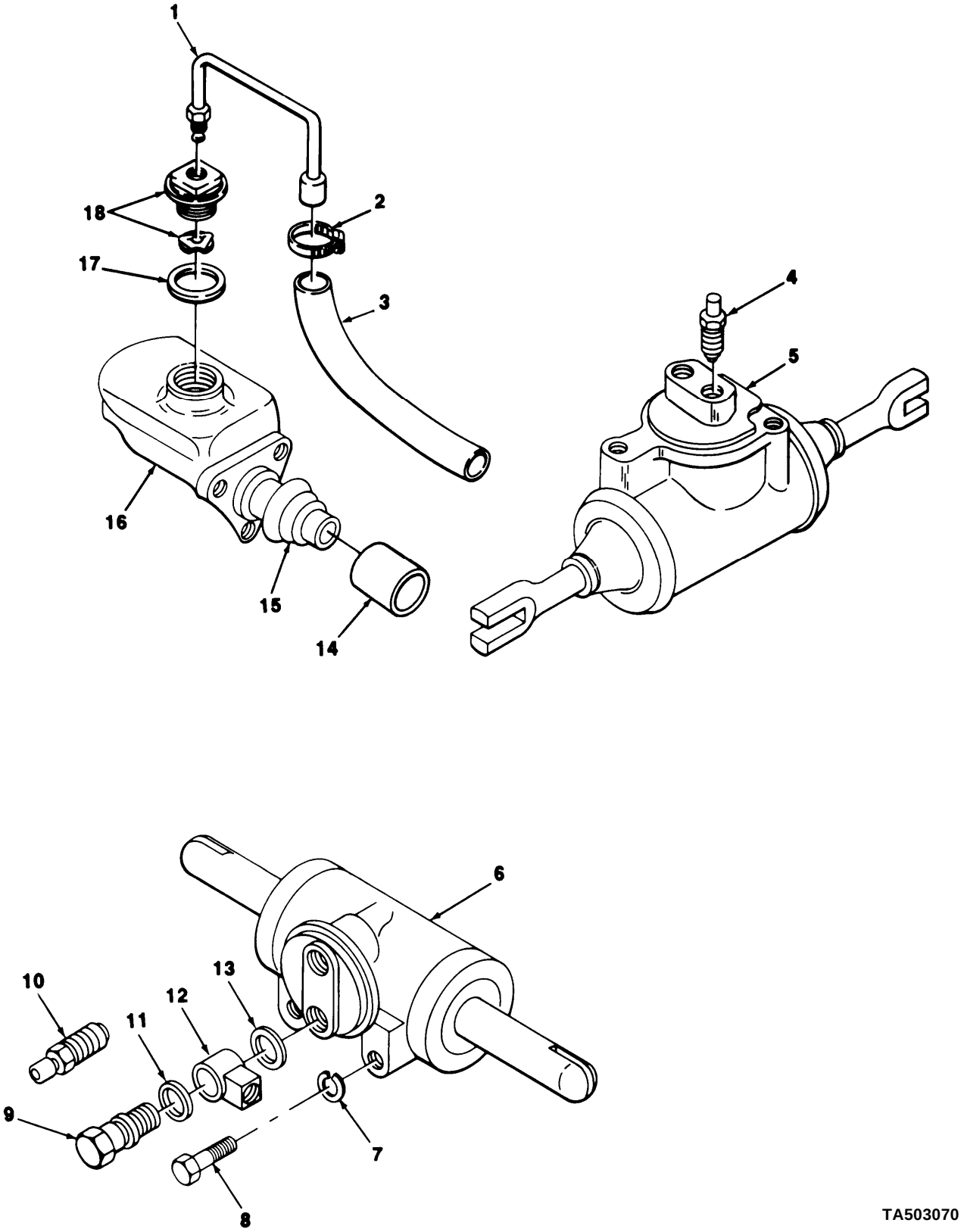

FIGURE 12. HYDRAULIC MASTER CYLINDER AND WHEEL CYLINDER.

(1) ITEM NO	(3) SMR CODE	CAGEC	(4) PART NUMBER	(5) DESCRIPTION AND USABLE ON CODES(UOC)	(6) QTY
				1204 HYDRAULIC BRAKE SYSTEM	
				FIG. 12 HYDRAULIC MASTER CYLINDER AND WHEEL CYLINDER	
1	PFOZZ	19207	8365426	TUBE ASSY,VENT.....	1
2	PAOZZ	96906	MS35842-11	CLAMP,HOSE.....	1
3	PAOZZ	96906	MS521301A204120	HOSE,RUBBER.....	1
4	PAOZZ	19207	7373260	BLEEDER VALVE,HYDRA..... UOC:698,701,711,713,714,715	4
5	PAOZZ	19207	7412065	CYLINDER ASSEMBLY,H..... UOC:698,701,711,713,714,715	4
6	PAOZZ	19207	7411010	CYLINDER ASSEMBLY,H..... UOC:702,704,706	4
7	PAOZZ	96906	MS35338-8	WASHER,LOCK..... UOC:702,704,706	4
8	PAOZZ	96906	MS18154-58	SCREW,CAP,HEXAGCN H..... UOC:702,704,706	4
9	PAOZZ	19207	5167419	BOLT,FLUID PASSAGE..... UOC:702,704,706	2
10	PAOZZ	19207	7373260	BLEEDER VALVE,HYDRA..... UOC:702,704,706	1
11	PAOZZ	19207	5160323	WASHER FLAT,WHEEL CYLINDER..... UOC:702,704,706	1
12	PAOZZ	63477	FC3354	CONNECTOR,MULTIPLE,..... UOC:702,704,706	2
13	PAOZZ	19207	5214539	WASHER FLAT,WHEEL CYLINDER..... UOC:702,704,706	2
14	PAOZZ	19207	8365427	COLLAR,AIR CHAMBER..... UOC:702,704,706	1
15	PAOZZ	19207	7979699	BOOT,MASTER CYLINDER..... UOC:701,702,704,706,711,713,714,715	1
16	PAOZZ	19207	8357980	CYLINDER ASSEMBLY,H..... UOC:701,702,704,706,711,713,714,715	1
17	XDOZZ	19207	7373354	GASKET.....	1
18	PAOZZ	63477	7979691	FILLER CAP ASSEMBLY.....	1

END OF FIGURE

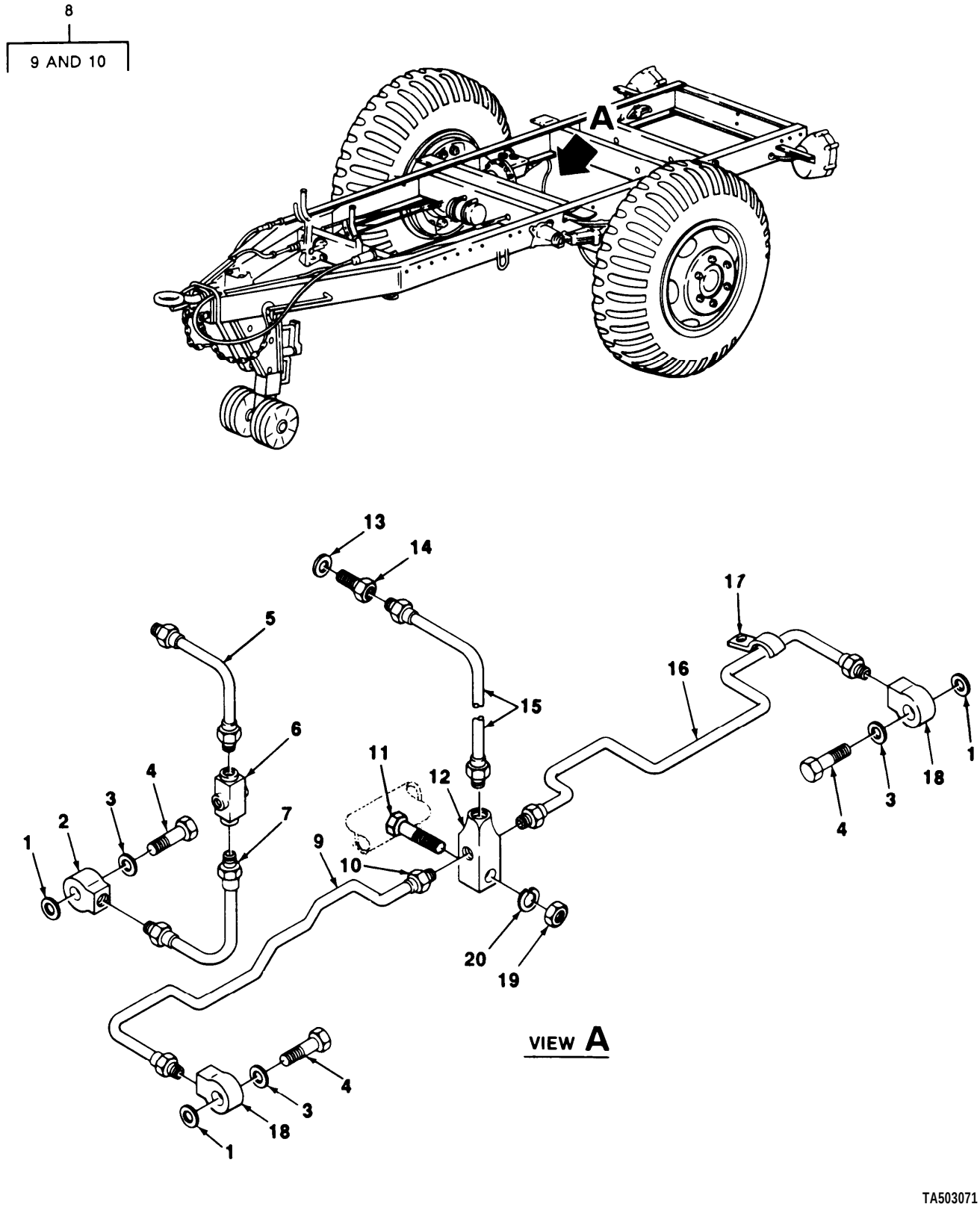

FIGURE 13, HYDRAULIC LINES, HOSES, AND FITTINGS (M103A1, M103A3, M105A1, M105A2, M107A1, M107A2, M107A2C, M448),

(1) ITEM NO	(2) SMR CODE	(3) CAGEC	(4) PART NUMBER	(5) DESCRIPTION AND USABLE ON CODES(UOC)	(6) QTY
				1204 HYDRAULIC BRAKE SYSTEM	
				FIG. 13 HYDRAULIC LINES, HOSES, AND FITTINGS (M103A1, M103A3, M105A1, M105A2, M107A1, M107A2, M107A2C, M448)	
1	PAOZZ	19207	7412088	WASHER,SHOULDERED A..... UOC:701,702,704,706,711,713,714,715	4
2	PAOZZ	19207	7745464	CONNECTOR,MULTIPLE,..... UOC:701,702,704,706,711,713,714,715	2
3	PAOZZ	19207	5298653	SPACER,RING..... UOC:701,702,704,706,711,713,714,715	4
4	PAOZZ	82646	7412079	BOLT,FLUID PASSAGE..... UOC:701,702,704,706,711,713,714,715	4
5	PAOZZ	19207	8733918	TUBE ASSEMBLY,METAL RIGHT,UPPER.... UOC:701,702,704,706,711,713,714,715	1
5	PAOZZ	19207	8733922	TUBE ASSEMBLY,METAL LEFT,UPPER..... UOC:701,702,704,706,711,713,714,715	1
6	PAOZZ	19207	7411903	CONNECTOR,MULTIPLE, BRAKE CYLINDER. UOC:701,702,704,706,711,713,714,715	2
7	PAOZZ	19207	8733920	TUBE ASSEMBLY,METAL LEFT, LOWER.... UOC:701,702,704,706,711,713,714,715	1
7	PAOZZ	19207	8733916	TUBE ASSEMBLY,METAL RIGHT,LOWER.... UOC:701,702,704,706,711,713,714,715	1
8	A0000	80212	7411076-1	TUBE ASSEMBLY..... UOC:701,711,713,714,715	1
8	A0000	19207	7973928	TUBE ASSEMBLY, LEFT HAND..... UOC:702,704,706	1
9	M00ZZ	81349	M3520-B70C2G	.TUBE METALLIC, MAKE FROM P/N MIL-T-3520..... UOC:701,711,713,714,715	1
9	M00ZZ	81349	M3520-A10C028	.TUBE METALLIC, MAKE FROM P/N MIL-T-3520..... UOC:702,704,706	1
10	PAOZZ	96906	MS51874-4	.INVERTED NUT,TUBE COUPLING..... UOC:701,702,704,706,711,713,714,715	2
11	PAOZZ	96906	MS90727-87	SCREW,CAP,HEXAGON HEAD..... UOC:701,702,704,706,711,713,714,715	1
12	PAOZZ	79470	5167679	CONNECTOR,MULTIPLE,..... UOC:701,702,704,706,711,713,714,715	1
13	PAOZZ	19207	5156636	GASKET..... UOC:701,702,704,706,711,713,714,715	1
14	PAOZZ	79470	8365390	REDUCER,TUBE..... UOC:701,702,704,706,711,713,714,715	1
15	PAOZZ	19207	7411023	HOSE ASSEMBLY,NONME..... UOC:701,702,704,706,711,713,714,715	1
16	PAOZZ	19207	7973930	TUBE ASSEMBLY,METAL..... UOC:702,704,706	1
16	PAOZZ	19207	7411077	LINE ASY HYDRAULIC..... UOC:701,711,713,714,715	1
17	XDOZZ	19207	8365413	CLIP.....	4

(1) ITEM NO	(2) SMR CODE	(3) CAGEC	(4) PART NUMBER	(5) DESCRIPTION AND USABLE ON CODES(UOC)	(6) QTY
				UOC:701,702,704,706,711,713,714,715	
18	PAOZZ	19207	7745464	TEE,TUBE.....	2
				UOC:701,702,704,706,711,713,714,715	
19	PAOZZ	96906	MS51968-11	NUT,PLAIN,HEXAGON.....	1
				UOC:701,702,704,706,711,713,714,715	
20	PAOZZ	96906	MS35338-47	WASHER,LOCK.....	1
				UOC:701,702,704,706,711,713,714,715	

END OF FIGURE

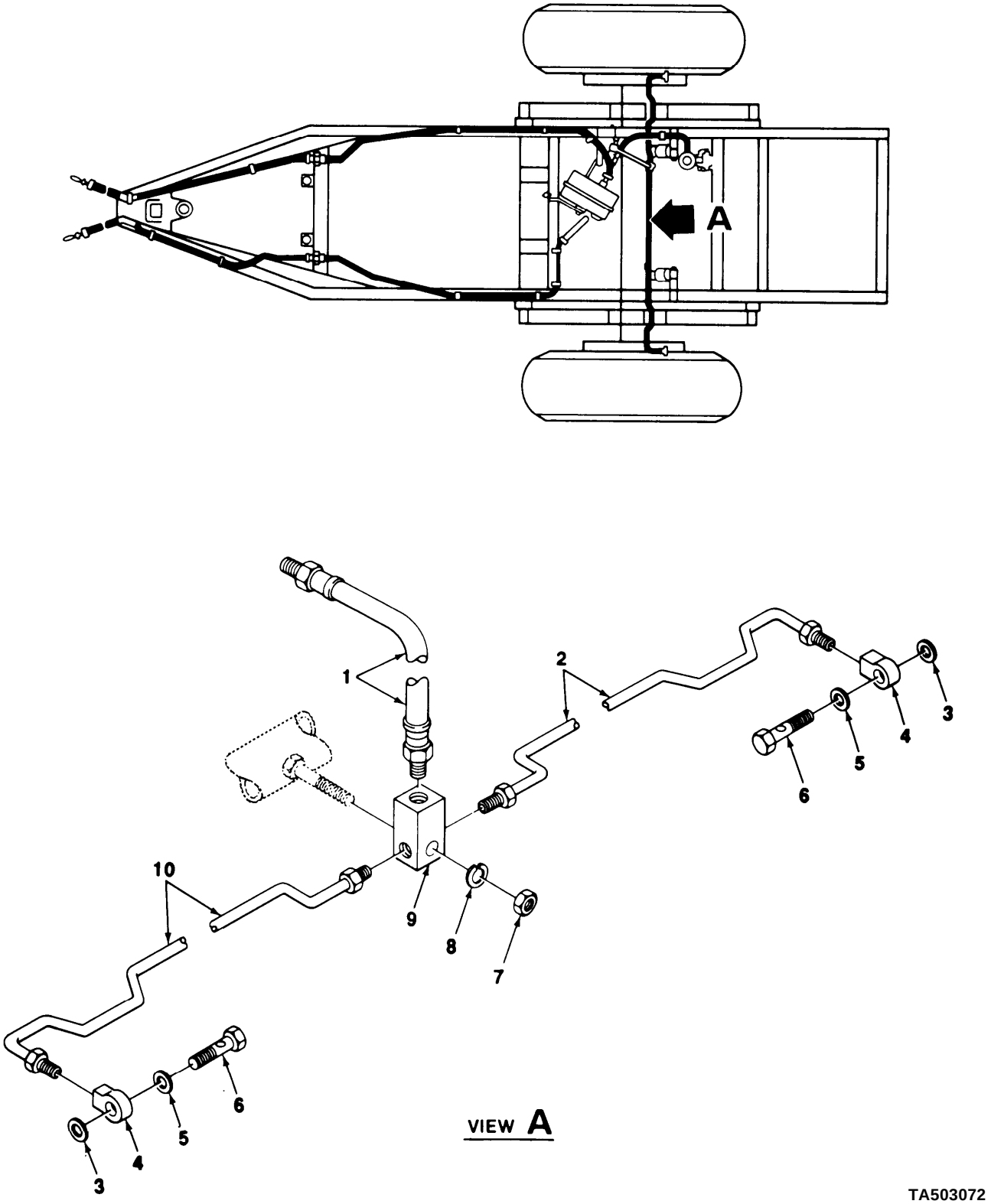

FIGURE 14, VACUUM HYDRAULIC BRAKE SYSTEM HOSES, LINES AND FITTINGS (M105A2C).

(1) ITEM NO	(2) SMR CODE	(3) CAGEC	(4) PART NUMBER	(5) DESCRIPTION AND USABLE ON CODES(UOC)	(6) QTY
				1205 VACUUM SYSTEM COMPONENTS	
				FIG. 14 VACUUM HYDRAULIC BRAKE SYSTEM HOSES, LINES AND FITTINGS (M105A2C)	
1	PAOZZ	19207	7411023	HOSE ASSEMBLY,NONME..... UOC:698	1
2	PAOZZ	19207	7973930	TUBE ASSEMBLY,METAL RIGHT HAND..... UOC:698	1
3	PAOZZ	19207	5298653	SPACER,RING..... UOC:698	2
4	PAOZZ	19207	7745464	TEE,TUBE..... UOC:698	2
5	PAOZZ	19207	7412088	WASHER,SHOULDERED A..... UOC:698	2
6	PAOZZ	63477	7412079	BOLT,FLUID PASSAGE..... UOC:698	2
7	PFOZZ	96906	MS51968-11	NUT,PLAIN,HEXAGON..... UOC:698	1
8	PFOZZ	96906	MS35338-47	WASHER,LOCK..... UOC:698	1
9	PAOZZ	79470	5167679	CONNECTOR,MULTIPLE,..... UOC:698	1
0	PAOZZ	81349	M3520-A40C04B	TUBE ASSEMBLY, LEFT HAND..... UOC:698	1

END OF FIGURE

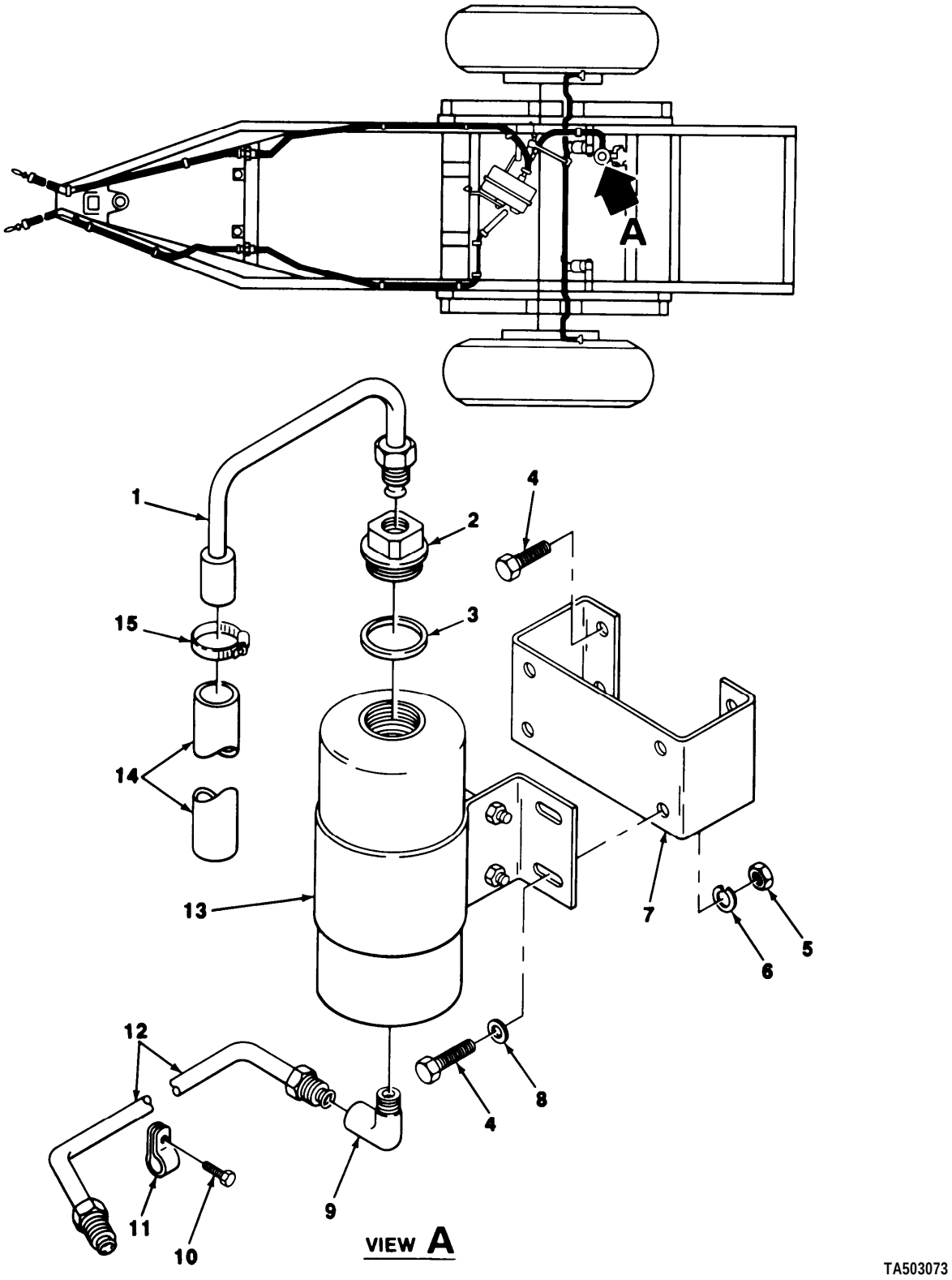

FIGURE 15. VACUUM HYDRAULIC BRAKE SYSTEM TANK ASSEMBLY (M105A2C).

(1) ITEM NO	(2) SMR CODE	(3) CAGEC	(4) PART NUMBER	(5) DESCRIPTION AND USABLE ON CODES(UOC)	(6) QTY
				1205 VACUUM SYSTEM COMPONENTS	
				FIG. 15 VACUUM HYDRAULIC BRAKE SYSTEM TANK ASSEMBLY (M105A2C)	
1	PAOZZ	23705	A298322	TUBE ASSEMBLY,METAL..... UOC:698	1
2	PAOZZ	63477	7979691	CAP,FILLER OPENING..... UOC:698	1
3	PAOZZ	19207	7373354	SPACER,RING..... UOC:698	1
4	PFOZZ	96906	MS90727-5	SCREW,CAP,HEXAGON H..... UOC:698	8
5	PFOZZ	96906	MS51968-2	NUT,PLAIN,HEXAGON..... UOC:698	8
6	PFOZZ	96906	MS35338-44	WASHER,LOCK..... UOC:698	8
7	XDOZZ	19207	8683593	BRACKET..... UOC:698	1
8	PAOZZ	96906	MS27183-10	WASHER,FLAT..... UOC:698	4
9	PAOZZ	30379	143342	ELBOW,PIPE TO TUBE..... UOC:698	1
10	PAOZZ	96906	MS51861-51	SCREW,TAPPING,THREA..... UOC:698	1
11	PAOZZ	96906	MS21333-3	CLAMP,LOOP..... UOC:698	1
12	XDOZZ	19207	8683594	TUBE ASSEMBLY..... UOC:698	1
13	XDOZZ	19207	8764719	TANK..... UOC:698	1
14	PAOZZ	96906	MS521301A204120	HOSE,NONMETALLIC..... UOC:698	1
15	PFOZZ	96906	MS35842-12	CLAMP,HOSE..... UOC:698	1

END OF FIGURE

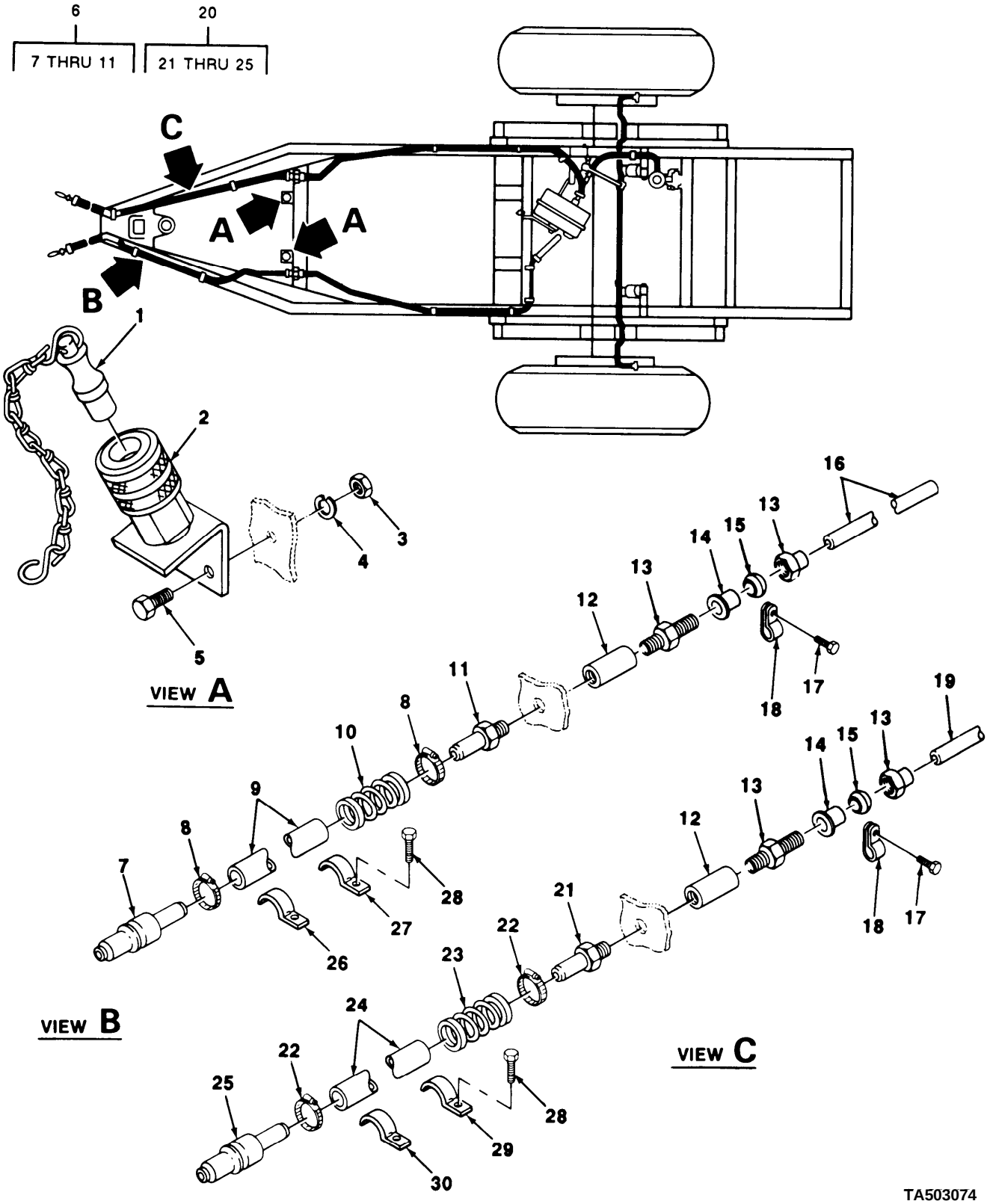

FIGURE 16. VACUUM HYDRAULIC BRAKE SYSTEM HOSE ASSEMBLY (M105A2C),

(1) ITEM NO	(2) SMR CODE	(3) CAGEC	(4) PART NUMBER	(5) DESCRIPTION AND USABLE ON CODES(UOC)	(6) QTY
				1205 VACUUM SYSTEM COMPONENTS	
				FIG. 16 VACUUM HYDRAULIC BRAKE SYSTEM HOSE ASSEMBLY (M105A2C)	
1	XDOZZ	19207	8764697	PLUG AND CHAIN ASSY..... UOC:698	2
2	PAOZZ	19207	8683600	COUPLING,DUMMY,VACU..... UOC:698	2
3	PFOZZ	96906	MS51968-5	NUT,PLAIN,HEXAGON..... UOC:698	4
4	PFOZZ	96906	MS35338-45	WASHER,LOCK..... UOC:698	4
5	PFOZZ	96906	MS90726-31	BOLT,MACHINE..... UOC:698	4
6	PAOOO	19207	8683604	HOSE ASSEMBLY,NONME..... UOC:698	1
7	PAOZZ	40342	8764668	.COUPLING HALF,QUICK..... UOC:698	1
8	PAOZZ	96906	MS35842-11	.CLAMP,HOSE..... UOC:698	2
9	PAOZZ	83397	8683602	.HOSE,NONMETALLIC..... UOC:698	1
10	PAOZZ	19207	8683606	.SPRING,HELICAL,COMP..... UOC:698	1
11	PAOZZ	19207	8764667	.ADAPTER,STRAIGHT,PI..... UOC:698	1
12	PAOZZ	04741	217709	COUPLING,PIPE..... UOC:698	2
13	PAOZZ	81343	8-6 120102BA	ADAPTER,STRAIGHT,PI..... UOC:698	2
14	PAOZZ	19207	CPR102321-1	INSERT,TUBE FITTING..... UOC:698	4
15	PAOZZ	96906	MS39136-1B	SLEEVE,COMPRESSION..... UOC:698	2
16	MOOZZ	19207	2775529-60	HOSE,NONMETALLIC MAKE FROM P/N 246115 CUT TO FIT..... UOC:698	1
17	PFOZZ	96906	MS51861-45	SCREW,TAPPING,THREA..... UOC:698	7
18	PAOZZ	96906	MS21333-7	CLAMP,LOOP..... UOC:698	7
19	MOOZZ	19207	277529-54	HOSE,NONMETALLIC, MAKE FROM P/N 246115 CUT TO FIT..... UOC:698	1
20	XDOOO	19207	8683603	HOSE ASSEMBLY..... UOC:698	1
21	XDOZZ	79470	7350508	.ADAPTER,STRAIGHT,PI PIPE TO HOSE, CHAMBER,REAR..... UOC:698	1
22	PAOZZ	96906	MS35842-11	.CLAMP,HOSE..... UOC:698	2

(1) ITEM NO	(2) SMR CODE	(3) CAGEC	(4) PART NUMBER	(5) DESCRIPTION AND USABLE ON CODES(UOC)	(6) QTY
23	PAOZZ	19207	8683605	.SPRING,HELICAL,COMP..... UOC:698	1
24	PAOZZ	19207	8683601	.HOSE,NONMETALLIC FRONT AND REAR... UOC:698	1
25	PAOZZ	40342	8764670	.COUPLING HALF,QUICK..... UOC:698	1
26	XDOZZ	96906	MS35140-13	STRAP,RETAINING..... UOC:698	1
27	XDOZZ	96906	MS35140-15	STRAP RETAINING..... UOC:698	1
28	PAOZZ	96906	MS24629-58	SCREW,TAPPING,THREA..... UOC:698	7
29	XDOZZ	96906	MS35140-11	STRAP,RETAINING..... UOC:698	1
30	XDOZZ	96906	MS35140-14	STRAP,RETAINING..... UOC:698	1

END OF FIGURE

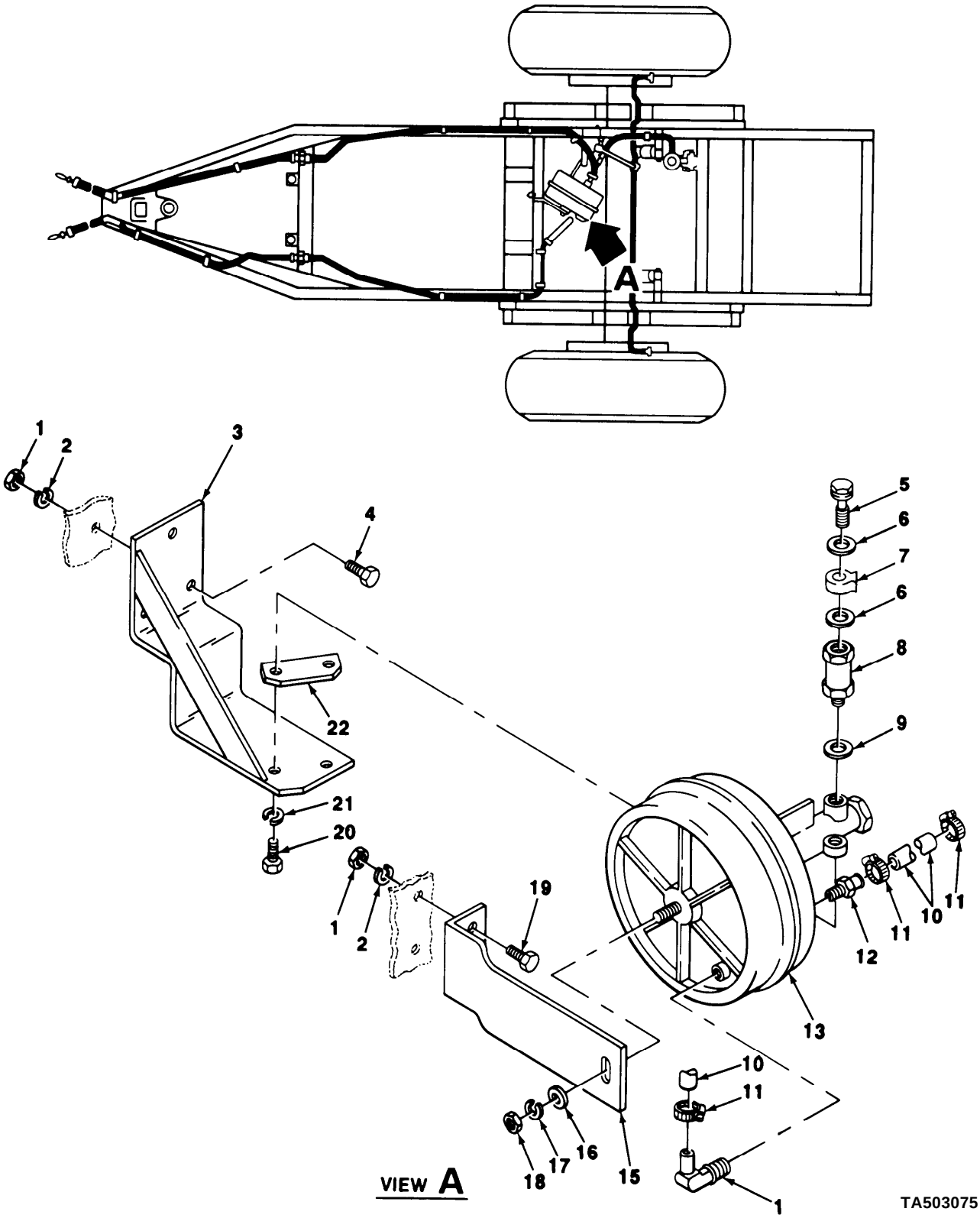

FIGURE 17. VACUUM HYDRAULIC BRAKE SYSTEM MASTER CYLINDER (M105A2C).

(1) ITEM NO	(2) SMR CODE	(3) CAGEC	(4) PART NUMBER	(5) DESCRIPTION AND USABLE (ON CODES(UOC)	(6) QTY
				1205 VACUUM SYSTEM COMPONENTS	
				FIG. 17 VACUUM HYDRAULIC BRAKE SYSTEM MASTER CYLINDER (M105A2C)	
1	PAOZZ	96906	MS51968-8	NUT,PLAIN,HEXAGON..... UOC:698	5
2	PAOZZ	96906	MS35338-46	WASHER,LOCK..... UOC:698	5
3	PAOZZ	19207	8683595	BRACKET,MOUNTING..... UOC:698	1
4	PFOZZ	96906	MS18154-58	SCREW,CAP,HEXAGON H..... UOC:698	3
5	PAOZZ	19207	5167419	BOLT,FLUID PASSAGE WHEEL CYLINDER.. UOC:698	2
6	PAOZZ	19207	5160323	WASHER,FLAT..... UOC:698	4
7	PAOZZ	63477	FC4819	CONNECTOR,MULTIPLE..... UOC:698	2
8	XBOZZ	19207	8764692	VALVE,CHECK..... UOC:698	1
9	PAOZZ	19207	5214539	WASHER,FLAT..... UOC:698	1
10	XDOZZ	19207	8683607	HOSE,RUBBER..... UOC:698	2
11	PAOZZ	96906	MS35842-11	CLAMP,HOSE..... UOC:698	4
12	XDOZZ	79470	7350508	ADAPTER,STRAIGHT,PI..... UOC:698	1
13	PAOZZ	40342	C479	CHAMBER,AIR BRAKE VACUUM..... UOC:698	1
14	XDOZZ	19207	8764672	ELBOW..... UOC:698	1
15	XDOZZ	19207	8764720	BRACE..... UOC:698	1
16	PFOZZ	96906	MS27183-18	WASHER,FLAT..... UOC:698	1
17	PFOZZ	96906	MS35338-48	WASHER,LOCK..... UOC:698	1
18	PFOZZ	96906	MS51968-14	NUT,PLAIN,HEXAGON..... UOC:698	1
19	PFOZZ	96906	MS90727-59	SCREW,CAP,HEXAGON H..... UOC:698	2
20	PFOZZ	96906	MS90727-86	SCREW,CAP,HEXAGON H..... UOC:698	2
21	PFOZZ	96906	MS35338-47	WASHER,LOCK..... UOC:698	2
22	XDOZZ	19207	8764705	SPACER..... UOC:698	1

END OF FIGURE

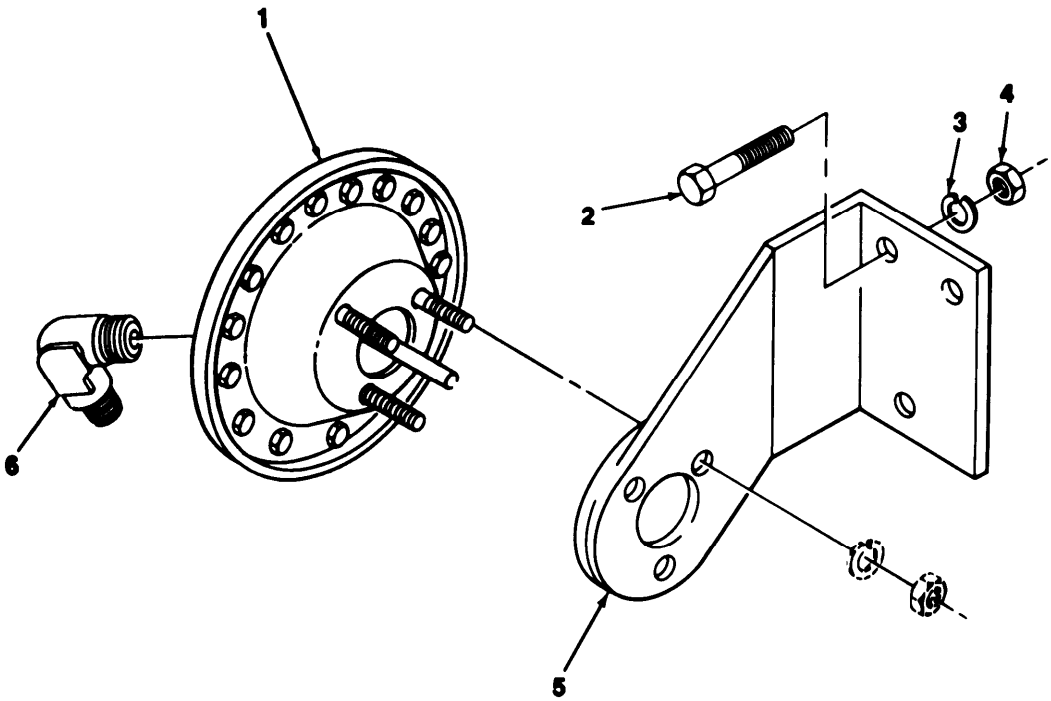

TA503076

FIGURE 18. AIR CHAMBER ASSEMBLY (M103A1, M103A3, M105A1, M105A2, M107A1, M107A2, M107A2C, M448).

(1) ITEM NO	(2) SMR CODE	(3) CAGEC	(4) PART NUMBER	(5) DESCRIPTION AND USABLE ON CODES(UOC)	(6) QTY
				1208 AIR BRAKE SYSTEM	
				FIG. 18 AIR CHAMBER ASSEMBLY (M103A1, M103A3, M105A1, M105A2, M107A1, M107A2, M107A2C, M448)	
1	PAOZZ	23075	A298320	CHAMBER,AIR BRAKE..... UOC:701,702,704,706,711,713,714,715	1
2	PAOZZ	96906	MS90726-60	SCREW,CAP,HEXAGON H..... UOC:701,702,704,706,711,713,714,715	3
3	PAOZZ	96906	MS35338-27	WASHER,LOCK..... UOC:701,702,704,706,711,713,714,715	3
4	PAOZZ	96906	MS51968-8	NUT,PLAIN,HEXAGON..... UOC:701,702,704,706,711,713,714,715	3
5	PFOZZ	19207	8357982	BRACKET,ANGLE..... UOC:701,702,704,706,711,713,714,715	1
6	PAOZZ	81343	6-4 120202BA(LONG NUT)	ELBOW,PIPE TO TUBE..... UOC:701,702,704,706,711,713,714,715	1

END OF FIGURE

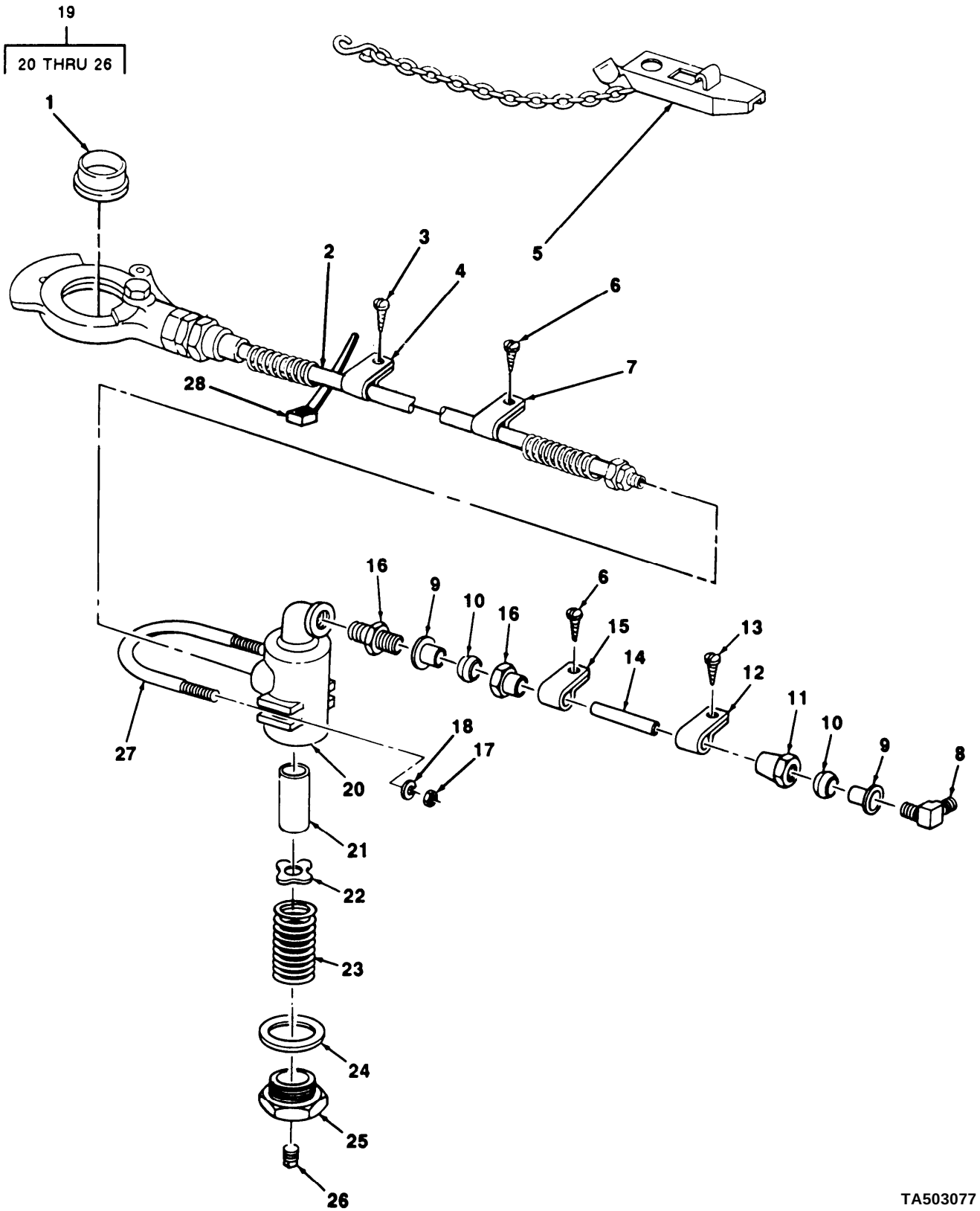

FIGURE 19. AIR LINES, HOSES AND FITTINGS (M103A1, M103A3, M105A1, M105A2, M107A1, M107A2, M107A2C, M448).

(1) ITEM NO	(2) SMR CODE	(3) CAGEC	(4) PART NUMBER	(5) DESCRIPTION AND USABLE ON CODES(UOC)	(6) QTY
				1208 AIR BRAKE SYSTEM	
				FIG. 19 AIR LINES, HOSES AND FITTINGS (M103A1, M103A3, M105A1, M15A2, M107A1, M107A2, M107A2C, M448)	
1	PAOZZ	06853	213630	PACKING,PREFORMED..... UOC:702,704,706	1
1	PAOZZ	06853	213630	PACKING,PREFORMED..... UOC:701,711,713,714,715	2
2	PAOZZ	19207	8330805	HOSE ASSEMBLY,NONME..... UOC:702,704,706	1
2	PAOZZ	19207	8330805	HOSE ASSEMBLY,NONME..... UOC:701,711,713,714,715	2
3	PAOZZ	96906	MS24629-47	SCREW,TAPPING,THREA..... UOC:701,711,713,714,715	6
4	PAOZZ	19207	8331537	STRAP,RETAINING..... UOC:702,704,706	1
4	PAOZZ	19207	8331536	STRAP,RETAINING..... UOC:701,711,713,714,715	2
5	PAOZZ	19207	7411021	DUMMY COUPLING,AUTO WITH CHAIN..... UOC:702,704,706	1
5	PAOZZ	19207	7411021	DUMMY COUPLING,AUTO WITH CHAIN..... UOC:701,711,713,714,715	2
6	XDOZZ	19207	145207	SCREW..... UOC:702,704,706	5
7	PAOZZ	19207	8331536	STRAP,RETAINING..... UOC:702,704,706	2
7	PAOZZ	19207	8331536	STRAP,RETAINING..... UOC:701,711,713,714,715	4
8	PAOZZ	96906	MS39179-5	ELBOW,PIPE TO TUBE..... UOC:701,711,713,714,715	2
8	PAOZZ	81343	6-4 120202BA(LONG NUT)	ELBOW,PIPE TO TUBE..... UOC:702,704,706	1
9	PAOZZ	19207	CPR102321-1	INSERT,TUBE FITTING..... UOC:702,704,706	2
9	PAOZZ	19207	CPR102321-1	INSERT,TUBE FITTING..... UOC:701,711,713,714,715	4
10	PAOZZ	96906	MS39136-1B	SLEEVE,COMPRESSION..... UOC:702,704,706	2
10	PAOZZ	96906	MS39136-1B	SLEEVE,COMPRESSION..... UOC:701,711,713,714,715	4
11	PAOZZ	78550	200360	NUT,TUBE COUPLING..... UOC:702,704,706	1
11	PAOZZ	78550	200360	NUT,TUBE COUPLING..... UOC:701,711,713,714,715	2
12	PAOZZ	96906	MS21333-100	CLAMP,LOOP..... UOC:701,711,713,714,715	4
12	PAOZZ	96906	MS21333-100	CLAMP,LOOP..... UOC:702,704,706	1
13	XDOZZ	96906	MS24649-27	SCREW,TAPPING,THREA.....	4

(1) ITEM NO	(2) SMR CODE	(3) CAGEC	(4) PART NUMBER	(5) DESCRIPTION AND USABLE ON CODES(UOC)	(6) QTY
				UOC:701,711,713,714,715	
14	MOOZZ	19207	104420-2-1	HOSE,NONMETALLIC, MAKE FROM P/ N246115, CUT TO FIT.....	2
				UOC:701,711,713,714,715	
14	MOOZZ	19207	104420-2-2	HOSE,NONMETALLIC, MAKE FROM P/N 246115, CUT TO FIT.....	
				UOC:702,704,706	
15	XOOZZ	19207	7979987	CLAMP.....	1
				UOC:702,704,706	
16	PAOZZ	81343	6-4 120102BA	ADAPTER,STRAIGHT, PIPE TO TUBE.....	1
				UOC:702,704,706	
16	PAOZZ	81343	6-4 120102BA	ADAPTER,STRAIGHT, PIPE TO TUBE.....	2
				UOC:701,711,713,714,715	
17	PAOZZ	96906	MS51967-2	NUT,PLAIN,HEXAGON.....	2
				UOC:702,704,706	
17	PAOZZ	96906	MS35690-45	NUT,PLAIN,HEXAGON.....	4
				UOC:701,711,713,714,715	
18	PAOZZ	96906	MS35338-44	WASHER,LOCK.....	2
				UOC:702,704,706	
18	PAOZZ	96906	MS35338-44	WASHER,LOCK.....	4
				UOC:701,711,713,714,715	
19	PAOOO	23705	A298749	AIR FILTER,BRAKE LI.....	2
				UOC:701,711,713,714,715	
19	PAOOO	23705	A298749	AIR FILTER,BRAKE LI.....	1
				UOC:702,704,706	
20	PAOZZ	40342	N-12970-A	.ELBOW BODY,AIR LINE.....	'
				UOC:701,702,704,706,711,713,714,715	
21	PAOZZ	23705	N12971	.FILTER ELEMENT FLUI PART OF KIT P/N RN13A.....	1
				UOC:701,702,704,706,711,713,714,715	
22	PAOZZ	40342	N12972	.WASHER,SPRING TENSI.....	1
				UOC:701,702,704,706,711,713,714,715	
23	PAOZZ	06853	235093	.SPRING,HELICAL,COMP PART OF KIT P/N RN13A.....	1
				UOC:701,702,704,706,711,713,714,715	
24	PAOZZ	91340	M4X509	.GASKET, PART OF KIT PART OF KIT P/N RN13A.....	1
				UOC:701,702,704,706,711,713,714,715	
25	PAOZZ	06853	235091	.ADAPTER BUSHING.....	1
				UOC:701,702,704,706,711,713,714,715	
26	PAOZZ	96906	MS20913-1S	.PLUG,PIPE.....	1
				UOC:701,702,704,706,711,713,714,715	
27	PAOZZ	19207	7979296	BOLT,U.....	1
				UOC:702,704,706	
27	PAOZZ	19207	7979296	BOLT,U.....	2
				UOC:701,711,713,714,715	
28	PAOZZ	19207	12355943-1	MARKER,BAND SERVICE.....	1
				UOC:711,713	
28	PAOZZ	19207	12355943-2	MARKER,BAND EMERGENCY.....	
				UOC:711,713	

END OF FIGURE

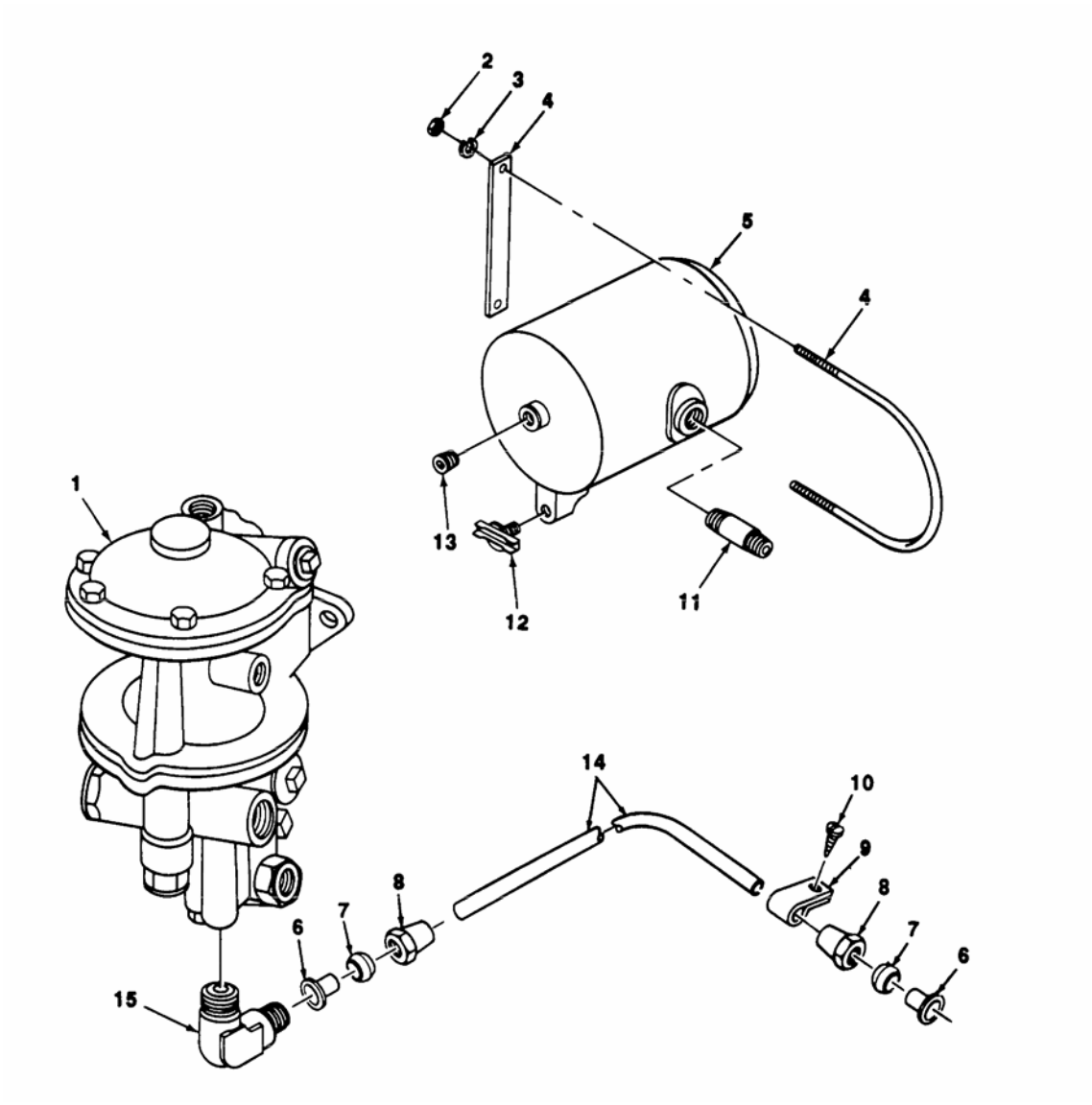

FIGURE 20. EMERGENCY RELAY VALVE AND RESERVOIR
(M103A3, M105A2, M107A2, M107A2C, M448).

(1) ITEM NO	(2) SMR CODE	(3) CAGEC	(4) PART NUMBER	(5) DESCRIPTION AND USABLE CODES(UOC)	(6) QTY
				1208 AIR BRAKE SYSTEM	
				FIG. 20 EMERGENCY RELAY VALVE AND RESERVOIR (M103A3, M105A2, M107A2, M107A2C, M448)	
1	PAOZZ	96906	MS53004-2	PARTS KIT,RELAY VAL..... UOC:701, 711,713,714,715	1
2	PAOZZ	96906	MS51968-5	NUT,PLAIN,HEXAGON..... UOC:701, 711,713,714,715	4
3	PAOZZ	96906	MS35338-45	WASHER,LOCK..... UOC:701, 711,713,714,715	4
4	PAOZZ	19207	11625105	BOLT U WITH STRAP..... UOC:701, 711,713,714,715	2
5	PAOZZ	19207	11625104	TANK, PRESSURE..... UOC:701, 711,713,714,715	1
6	PAOZZ	19207	CPR102321-1	INSERT,TUBE FITTING..... UOC:701, 711,713,714,715	2
7	PAOZZ	06853	200361	SLEEVE, COMPRESSION, TUBE-HOSE FITTING..... UOC:701, 711,713,714,715	2
8	PAOZZ	78550	200360	NUT,TUBE COUPLING..... UOC:701, 711,713,714,715	2
9	PAOZZ	96906	MS21333-100	CLAMP,LOOP..... UOC:701, 711,713,714,715	1
10	PAOZZ	96906	MS24629-47	SCREW,TAPPING,THREA..... UOC:701, 711,713,714,715	1
11	PAOZZ	96906	MS51953-101	NIPPLE,PIPE..... UOC:701, 711,713,714,715	1
12	PAOZZ	96906	MS35782-5	COCK,DRAIN..... UOC:701, 711,713,714,715	1
13	PAOZZ	96906	MS49005-6	PLUG,PIPE..... UOC:701, 711,713,714,715	1
14	MOOZZ	19207	104420-2-3	TUBE,MAKE FROM P/N 246115 CUT TO FIT..... UOC:701, 711,713,714,715	1
15	PAOZZ	81343	6-4 120202BA (LON G NUT)	ELBOW,PIPE TO TUBE..... UOC:701, 711,713,714,715	1

END OF FIGURE

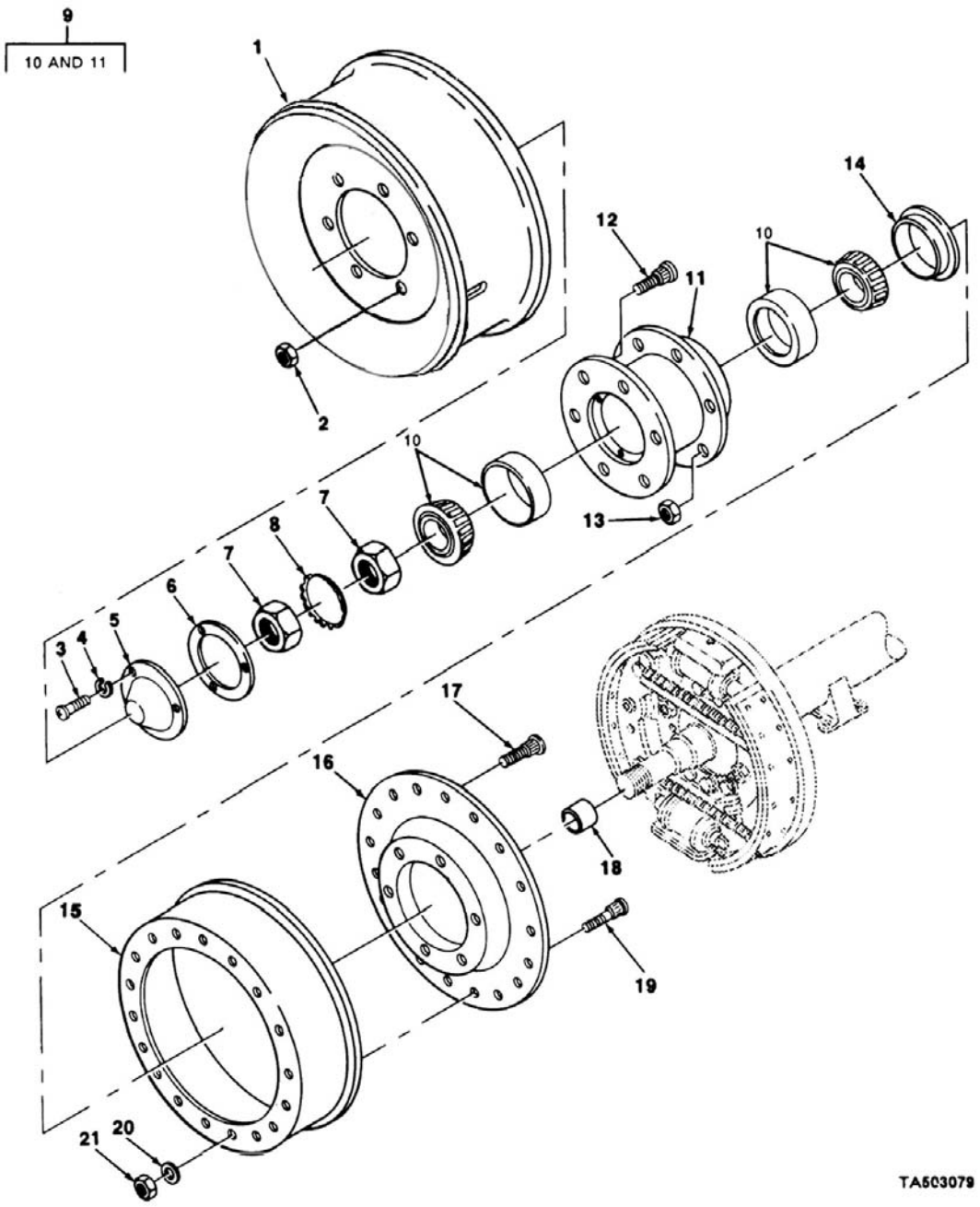

FIGURE 21. HUB AND DRUM ASSEMBLY (M103A3, M105A2, M105A2C, M107A2, M107A2C, M448).

(1) ITEM NO	(2) SMR CODE	(3) CAGEC	(4) PART NUMBER	(5) DESCRIPTION AND USABLE ON CODES(UOC)	(6) QTY
				GROUP 13 WHEELS	
				1311 WHEEL ASSEMBLY	
				FIG. 21 HUB AND (DRUM ASSEMBLY (M103A3, M105A2, M105A2C, M107A2, M107A2C, M448)	
1	PAOZZ	02686	129374	ASSEMBLY, WHEEL UOC:698,701,711,713,714,715	2
2	PAOZZ	02686	129378	NUT,PLAIN,SINGLE BA WHEEL HUB UOC:698,701,711,713,714,715	12
3	PAOZZ	96906	MS35206-279	SCREW,MACHINE UOC:698,701,711,713,714,715	3
4	PAOZZ	96906	MS35338-63	WASHER,LOCK UOC:698,701,711,713,714,715	3
5	PAOZZ	19200	6144454	HUB CAP,WHEEL UOC:698,701,711,713,714,715	2
6	PAOZZ	19207	6144356	GASKET UOC:698,701,711,713,714,715	2
7	PAOZZ	19207	7411379	NUT,PLAIN,OCTAGON UOC:698,701,711,713,714,715	4
8	PAOZZ	19207	7411378	WASHER,KEY UOC:701,711,713,714,	2
8	PAOZZ	19207	7411378	WASHER,KEY UOC:698,715	4
9	PAOZZ	09386	71423E	HUB AND CUP ASSEMBLY UOC:698,701,711,713,714,715	2
10	PAOZZ	96906	MS19081-230	.CONE AND ROLLERS,TA UOC:698,701,711,713,714,715	2
11	PAOZZ	19207	8719915	.HUB UOC:698,701,711,713,714,715	2
12	PAOZZ	96906	MS51946-2	BOLT,RIBBED SHOULDER RIGHT HAND UOC:698,701,711,713,714,715	12
13	PAOZZ	96906	MS51922-61	NUT,PLAIN,SLOTTED,H. UOC:698,701,711,713,714,715	12
14	PAOZZ	19207	7411429	SEAL,PLAIN ENCASED UOC:698,701,711,713,714,715	2
15	PAOZZ	19207	7411425	BRAKE DRUM UOC:698,701,711,713,714,715	2
16	PAOZZ	19207	7413231	PLATE,BACKING,BRAKE UOC:698,701,711,713,714,715	2
17	PAOZZ	96906	MS51946-11	BOLT,RIBBED SHOULDER UOC:698,701,711,713,714,715	12
18	PAOZZ	19207	7411433	SPACER,SLEEVE UOC:698,701,711,713,714,715	2
19	PAOZZ	19207	8720025	BOLT,RIBBED NECK UOC:698,701,711,713,714,715	36
20	PAOZZ	96906	MS27183-14	WASHER,FLAT UOC:698,701,711,713,714,715	36
21	PFOZZ	96906	MS21045-6	NUT,SELF-LOCKING,HE UOC:698,701,711,713,714,715	36

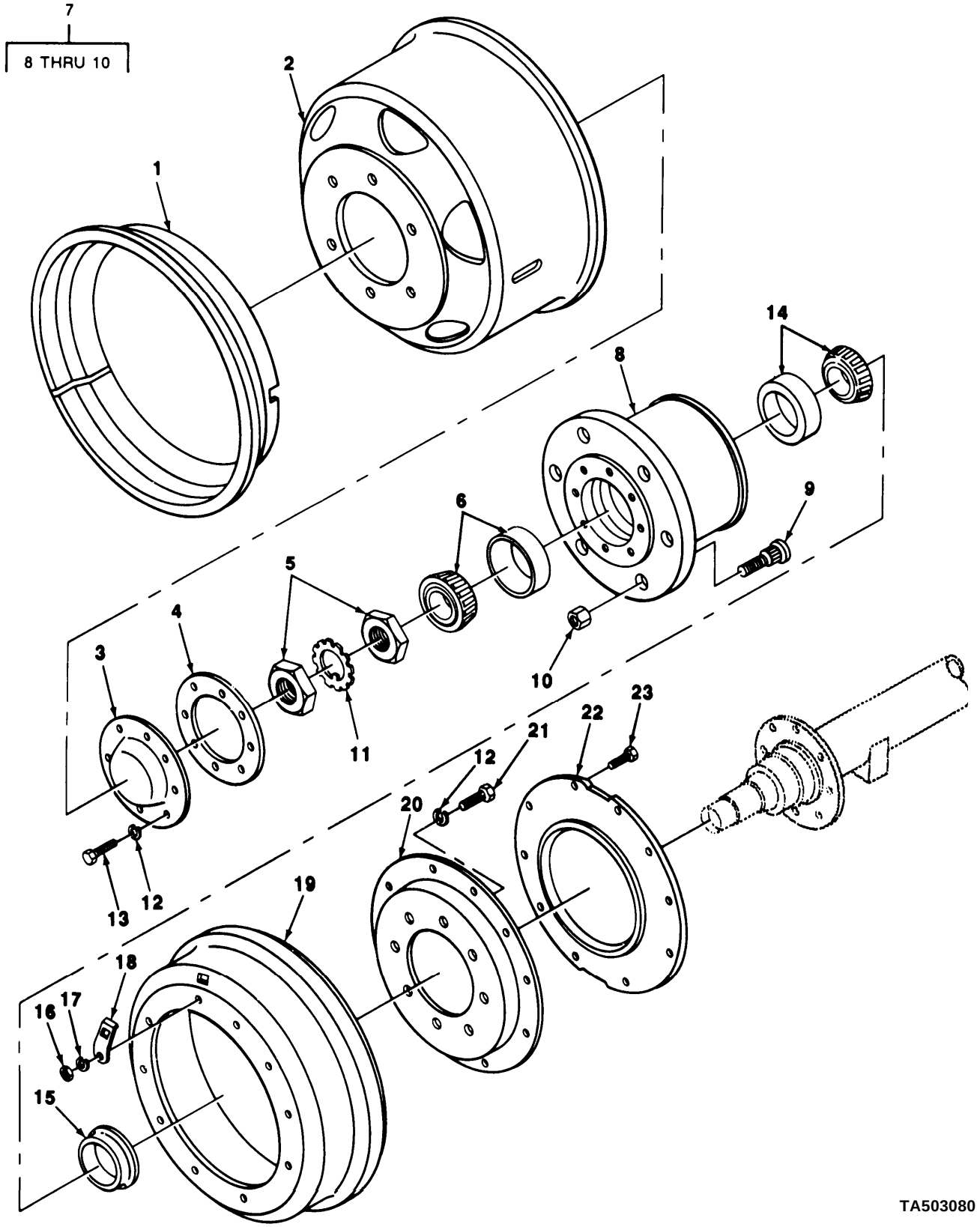

FIGURE 22. HUB AND DRUM ASSEMBLY (M103A1, M105A1, M107A1).

(1) ITEM NO	(2) SMR CODE	(3) CAGEC	(4) PART NUMBER	(5) DESCRIPTION AND USABLE ON CODES(UOC)	(6) QTY
				1311 WHEEL ASSEMBLY	
				FIG. 22 HUB AND (DRUM ASSEMBLY (M103A1, M105A1, M107A1)	
1	PAOZZ	96906	MS53045-3	RING,SIDE,AUTOMOTIV..... UOC:702,704,706	2
2	PAOZZ	96906	MS53044-5	WHEEL,PNEUMATIC TIR..... UOC:702,704,706	2
3	PAOZZ	78500	3262H86	CAP,GREASE..... UOC:702,704,706	2
4	PAOZZ	19207	7521787	GASKET..... UOC:702,704,706	2
5	PAOZZ	19207	7521633	NUT,PLAIN,OCTAGON..... UOC:702,704,706	4
6	PAOZZ	19207	10948079	BEARING,ROLLER,TAPE..... UOC:702,704,706	2
7	PAOZZ	78500	A333E785	HUB,BODY WITH BEARING CUP..... UOC:702,704,706	2
8	XDOZZ	19207	8375986	.HUB..... UOC:702,704,706	2
9	PAOZZ	96906	MS51946-4	.BOLT,RIBBED SHOULDE RIGHT HAND.... UOC:702,704,706	6
9	PAOZZ	96906	MS51946-3	.BOLT,RIBBED SHOULDE LEFT HAND..... UOC:702,704,706	6
10	PAOZZ	06906	MS51983-2	.NUT,PLAIN,SINGLE BA WHEEL HUB..... UOC:702,704,706	6
10	PAOZZ	96906	MS51983-1	.NUT,PLAIN,SINGLE BA..... UOC:702,704,706	6
11	PAOZZ	19207	7521650	WASHER,KEY..... UOC:702,704,706	2
12	PAOZZ	96906	MS35338-48	WASHER,LOCK..... UOC:702,704,706	32
13	PAOZZ	12204	120426	SCREW,CAP,HEXAGON H..... UOC:702,704,706	16
14	PAOZZ	19207	10945151	BEARING,ROLLER,TAPE..... UOC:702,704,706	2
15	PAOZZ	19207	10896684	SEAL,PLAIN ENCASED..... UOC:702,704,706	2
16	PAOZZ	96906	MS51968-8	NUT,PLAIN,HEXAGON..... UOC:702,704,706	20
17	PAOZZ	81718	MS35338-46	WASHER,LOCK..... UOC:702,704,706	20
18	PAOZZ	19207	7521667	COVER,ACCESS..... UOC:702,704,706	2
19	PAOZZ	19207	10896696	BRAKE DRUM..... UOC:702,704,706	2
20	PAOZZ	19207	7521663	ADAPTER,BRAKEDRUM WITH RING..... UOC:702,704,706	2
21	PAOZZ	19207	7521631	BOLT,MACHINE..... UOC:702,704,706	16
22	PAOZZ	19207	7521664	DEFLECTOR,DIRT AND.....	2

(1) ITEM NO	(2) SMR CODE	(3) CAGEC	(4) PART NUMBER	(5) DESCRIPTION AND USABLE ON CODES (UOC)	(6) QTY
				UOC:702,704,706	
23	PAOZZ	19207	7521629	BOLT,RIBBED SHOULDE.....	20
				UOC:702,704,706	

END OF FIGURE

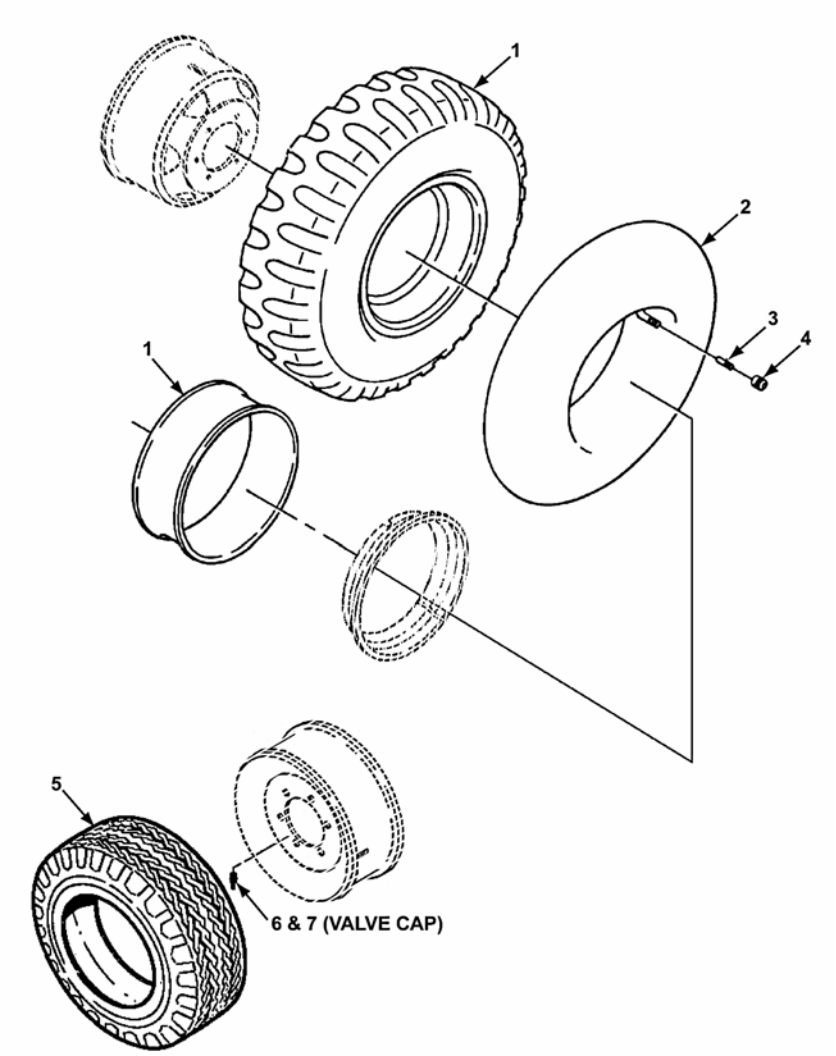

FIGURE 23. TIRE AND TUBE.

(1) ITEM NO	(2) SMR CODE	(3) CAGEC	(4) PART NUMBER	(5) DESCRIPTION AND USABLE ON CODES (UOC)	(6) QTY
				1313 TIRES AND TUBES	
				FIG. 23 TIRE AND TUBE	
1	PAOFF	81348	ZZ-T-381M/Group 3 /9.00-20/D/TBCC	TIRE, PNEUMATIC WITH FLAP UOC:702,704,706	2
2	PAOOO	81348	GROUP 2/9.00-20/T R175A/ON CENTER	INNER TUBE, PNEUMATI UOC:702,704,706	2
3	PAOZZ	96906	MS51377-1	VALVE CORE UOC:702,704,706	2
4	PAOZZ	51665	US48	CAP, PNEUMATIC VALVE UOC:702,704,706	2
5	PAOZZ		10R 22.5 G186 LR F	TIRE, PNEUMATIC, VEHICLE..... UOC:698,701,711,713,714,715	2
6	PAOZZ	64650	TR501	VALVE, PNEUMATIC TIRE..... UOC:698,701,711,713,714,715	2
7	PAOZZ	81348	ZZ-V-25	CAP,VALVE PNEUMATIC TIRE UOC:698,701,711,713,714,715	2

END OF FIGURE

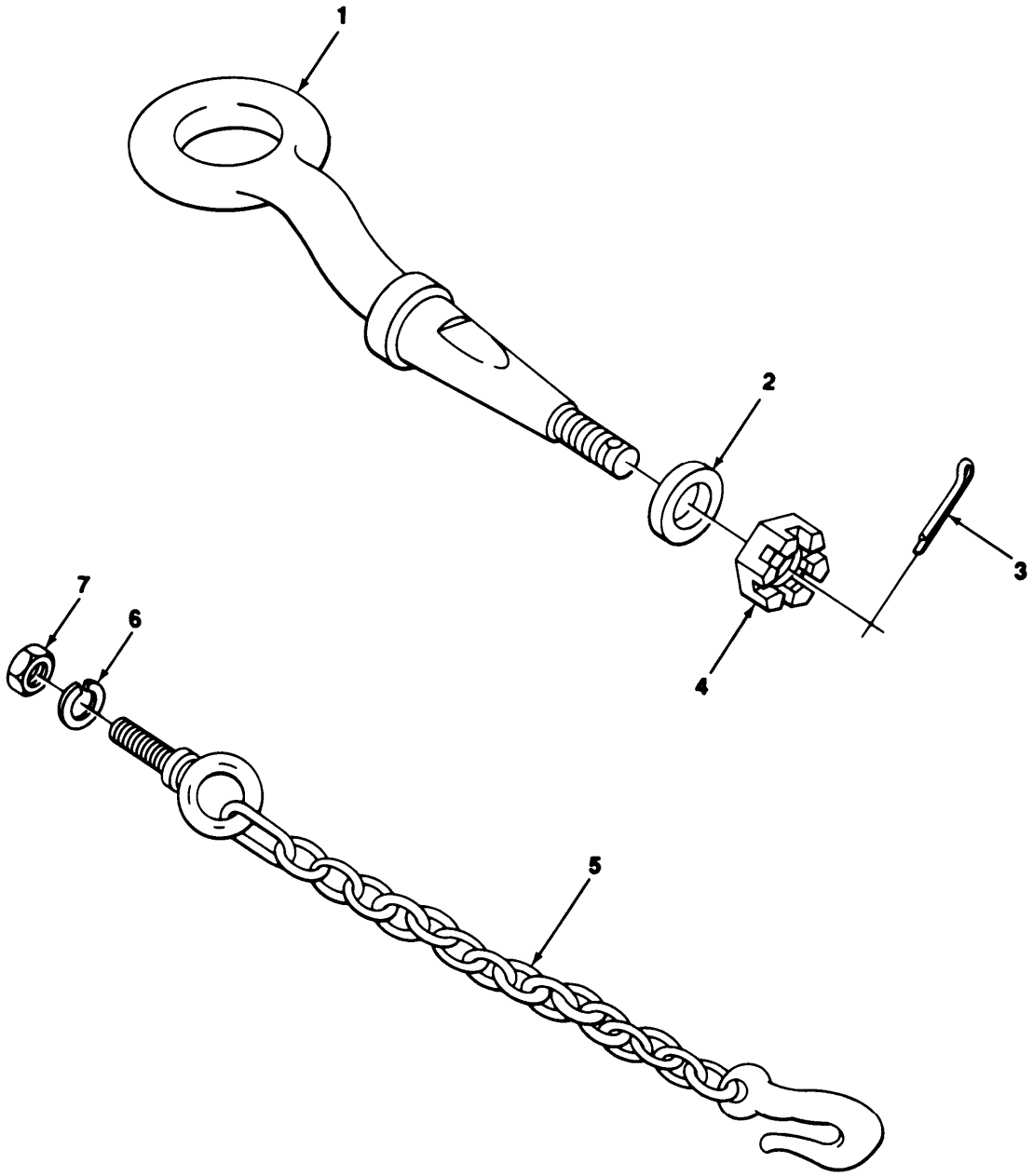

TA503082

FIGURE 24. DRAWBAR RING AND SAFETY CHAIN.

(1) ITEM NO	(2) SMR CODE	(3) CAGEC	(4) PART NUMBER	(5) DESCRIPTION AND USABLE ON CODES(UOC)	(6) QTY
				GROUP 15 FRAME AND TOWING ATTACHMENTS	
				1503 TOWING ATTACHMENTS	
				FIG. 24 DRAWER RING AND SAFETY CHAIN	
1	PAOZZ	96906	MS51339-3	COUPLER,DRAWBAR,RIN.....	1
2	PAOZZ	24617	446284	WASHER,FLAT.....	1
3	PAOZZ	96906	MS24665-495	PIN,COTTER.....	1
4	PAOZZ	19207	7411028	NUT,PLAIN,SLOTTED,H.....	1
5	PAOZZ	19207	7411027	CHAIN ASSEMBLY,SING SAFETY.....	2
6	PAOZZ	96906	MS35338-50	WASHER,LOCK.....	2
7	PAOZZ	96906	MS51967-20	NUT,PLAIN,HEXAGON.....	2

END OF FIGURE

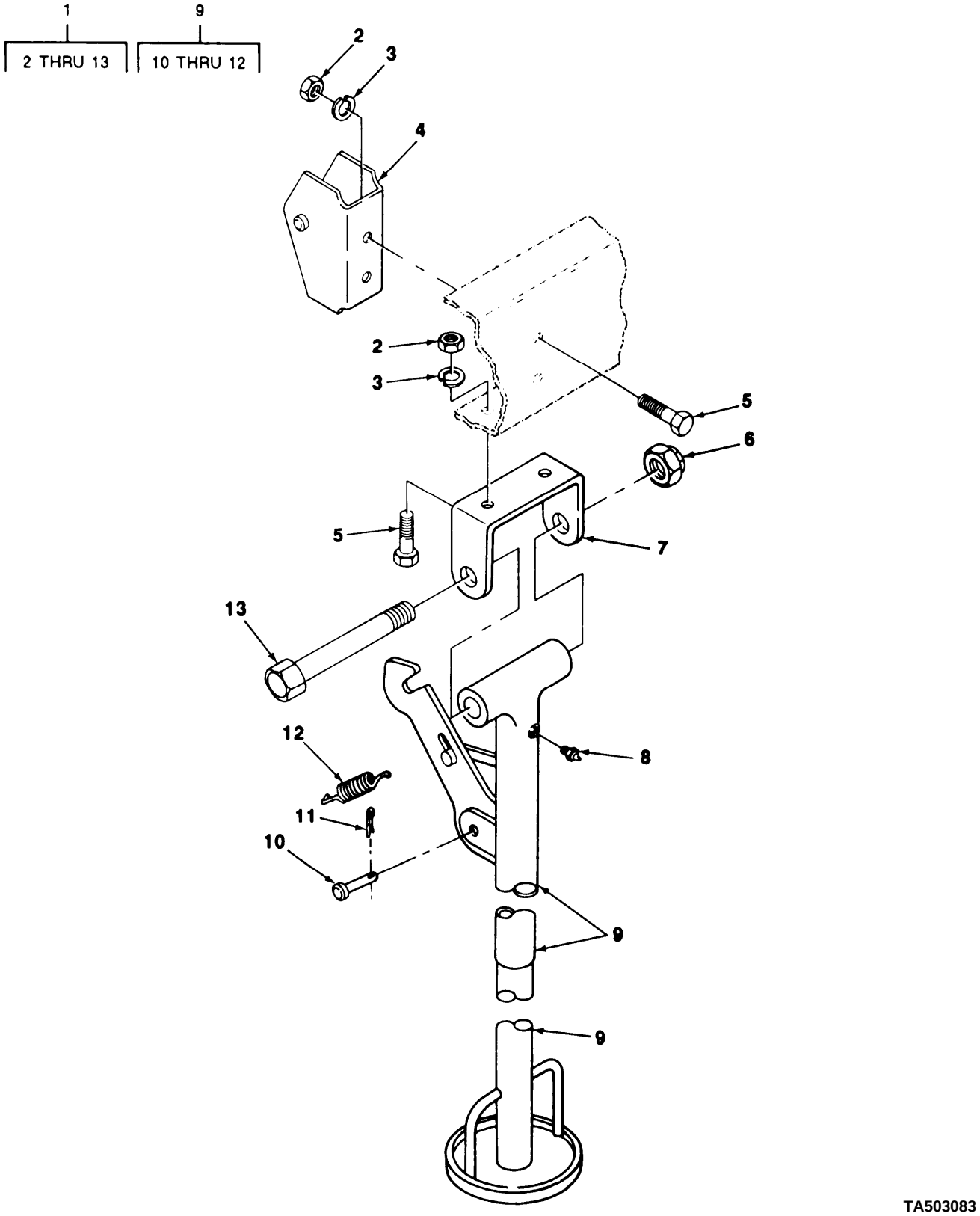

FIGURE 25. SUPPORT LEG (M105A1, M105A2).

(1) ITEM NO	(2) SMR CODE	(3) CAGEC	(4) PART NUMBER	(5) DESCRIPTION AND USABLE ON CODES(UOC)	(6) QTY
				1507 LANDING GEAR, LEVELING JACKS	
				FIG. 25 SUPPORT LEG (M105A1, M105A2)	
1	PAOOO	19207	8681929	SUPPORT ASSY,RETR..... UOC:704,713	1
2	PAOZZ	96906	MS51968-8	.NUT,PLAIN,HEXAGON..... UOC:704,713	4
3	PFOZZ	81718	H2525M	.WASHER,LOCK..... UOC:704,713	4
4	PAOZZ	19207	8681934	.BRACKET,EYE,NONROTA..... UOC:704,713	1
5	PAOZZ	96906	MS90726-60	.SCREW,CAP,HEXAGON H..... UOC:704,713	4
6	PAOZZ	96906	MS51922-57	.NUT,SELF-LOCKING,HE..... UOC:704,713	1
7	PAOZZ	19207	8681933	.BRACKET,EYE,NONROTA..... UOC:704,713	1
8	PAOZZ	96906	MS15003-1	.FITTING,LUBRICATION..... UOC:704,713	1
9	PAOOO	19207	8681930	.LEG ASSEMBLY,SUPPOR..... UOC:704,713	1
10	PAOZZ	96906	MS20392-7C27	..PIN,STRAIGHT,HEADED..... UOC:704,713	1
11	PAOZZ	96906	MS24665-353	..PIN,COTTER..... UOC:704,713	1
12	PAOZZ	19207	8681937	..SPRING,HELICAL,EXTE..... UOC:704,713	1
13	PAOZZ	96906	MS90728-201	.SCREW,CAP,HEXAGON H..... UOC:704,713	1

END OF FIGURE

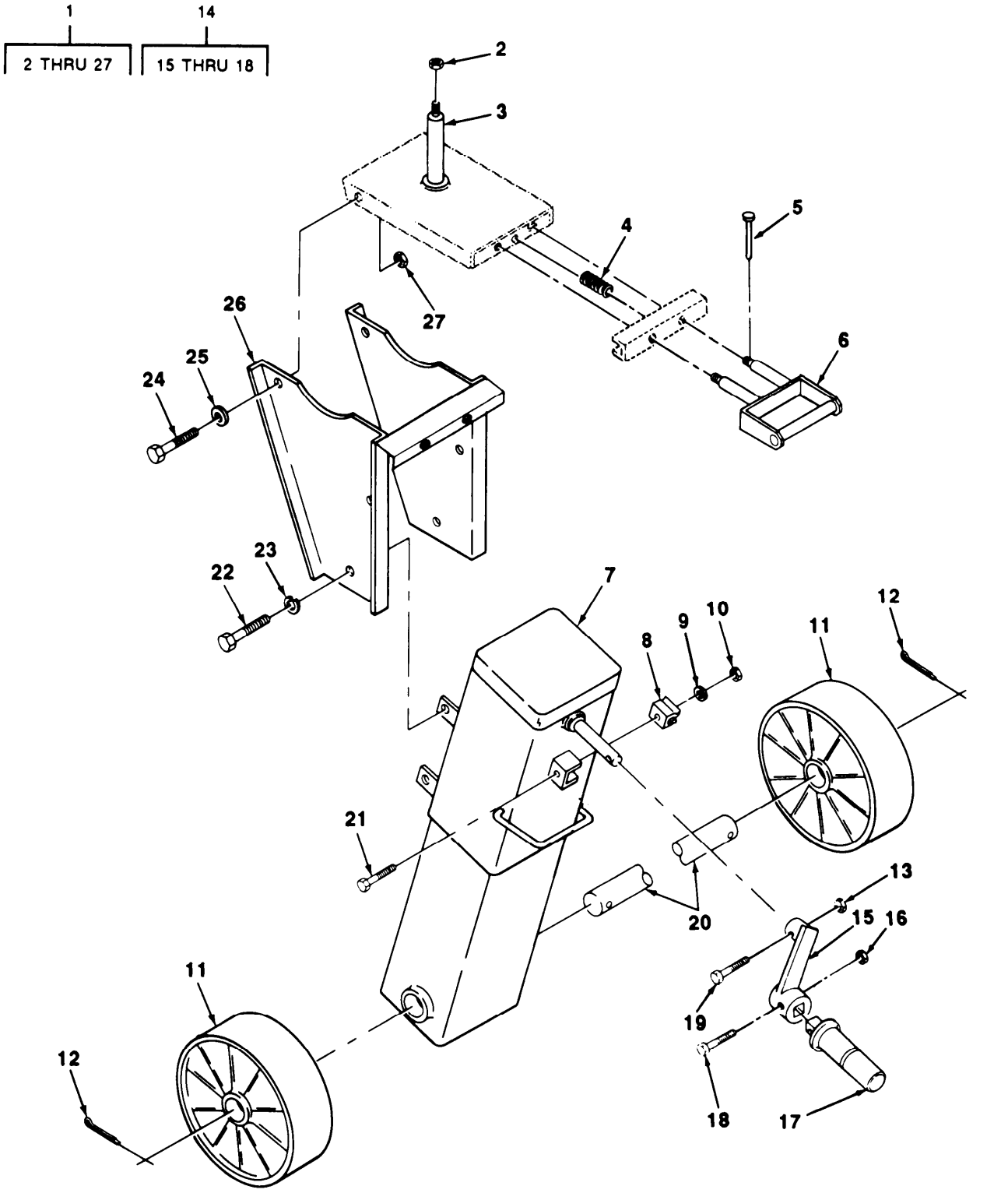

FIGURE 26. ADJUSTABLE CASTER ASSEMBLY.

(1) ITEM NO	(2) SMR CODE	(3) CAGEC	(4) PART NUMBER	(5) DESCRIPTION AND USABLE ON CODES(UOC)	(6) QTY
				1507 LANDING GEAR, LEVELING JACKS	
				FIG. 26 ADJUSTABLE CASTER ASSEMBLY	
1	PAOOO	19207	12259830	SUPPORT,RETRACTABLE.....	1
2	PFOZZ	96906	MS21044-N12	.NUT,SELF-LOCKING,HE.....	1
3	PAOZZ	19207	8331539	.BRACKET AND SPINDLE.....	1
4	PAOZZ	19207	8331541	.SPRING,HELICAL,COMP.....	1
5	PAOZZ	96906	MS16556-844	.PIN,STRAIGHT,HEADLE.....	2
6	PAOZZ	19207	12259844	.HANDLE,DRAW BAR.....	1
7	XAOZZ	19207	12259830-1	.LEG ASSY.....	1
8	PAOZZ	19207	12312996	.CLIP,SPRING TENSION.....	1
9	PAOZZ	96906	MS27183-42	.WASHER.....	1
10	PAOZZ	96906	MS21044-N3	.NUT,SELF-LOCKING,HE.....	1
11	PAOZZ	19207	12259845	.WHEEL,METAL TIRE.....	2
12	PFOZZ	96906	MS16562-65	.PIN,SPRING.....	2
13	PAOZZ	96906	MS17829-4C	.NUT,SELF-LOCKING,HE.....	1
14	PAOOO	19207	12259835	.CRANK,HAND.....	1
15	PAOZZ	19207	12259840	..ARM.....	1
16	PAOZZ	96906	MS21083-N5	..NUT,PLAIN,HEXAGON.....	1
17	PAOZZ	19207	12259837	..HANDLE.....	1
18	PAOZZ	96906	MS90726-38	..SCREW.....	1
19	PAOZZ	96906	MS90725-10	.SCREW,CAP,HEXAGON H.....	1
20	PAOZZ	19207	12259831	.SHAFT,STRAIGHT.....	1
21	PAOZZ	96906	MS35207-264	.SCREW,CAP,HEXAGON H.....	1
22	PAOZZ	96906	MS90728-109	.SCREW,CAP,HEXAGON H.....	1
23	PAOZZ	96906	MS35338-48	.WASHER,LOCK.....	1
24	PAOZZ	19207	7979972	.BOLT,SHOULDER.....	1
25	PAOZZ	96906	MS27183-20	.WASHER,FLAT.....	1
26	PFOZZ	19207	12259839	.LEG,SEMITRAILER RET.....	1
27	PFOZZ	96906	MS21044-N9	.NUT,SELF-LOCKING,HE.....	1

END OF FIGURE

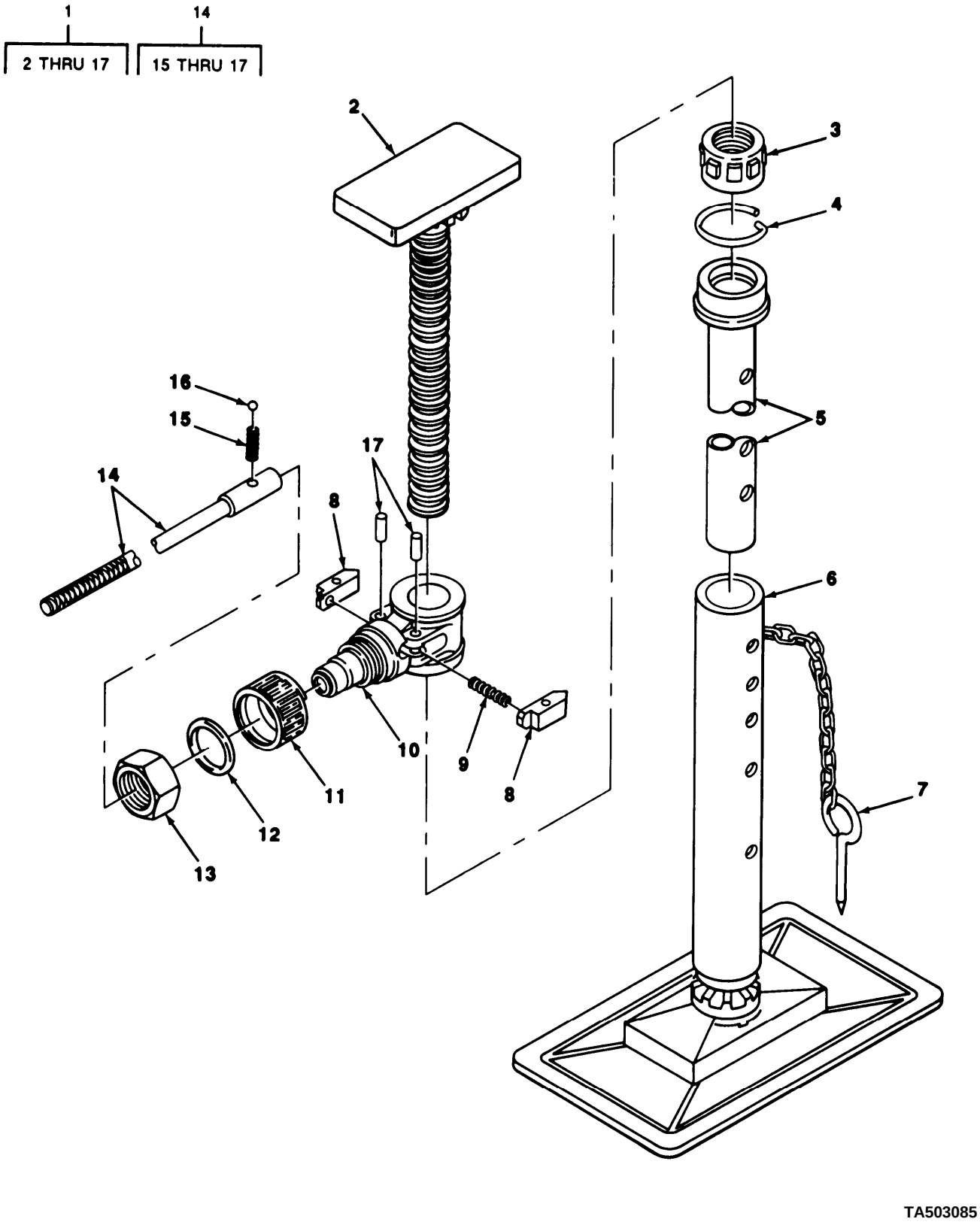

FIGURE 27. LEVELING SUPPORT JACK ASSEMBLY (M448).

(1) ITEM NO	(2) SMR CODE	(3) CAGEC	(4) PART NUMBER	(5) DESCRIPTION AND USABLE ON CODES (UOC)	(6) QTY
				1507 LANDING GEAR, LEVELING JACKS	
				FIG. 27 LEVELING SUPPORT JACK ASSEMBLY (M448)	
1	PAOOO	19207	10885200	JACK,LEVELING-SUPPO..... UOC:701	2
2	PFOZZ	19207	10885203	.SCREW ASSEMBLY,LEVE..... UOC:701	1
3	PAOZZ	19207	7534680	.RATCHET WHEEL..... UOC:701	1
4	PAOZZ	19207	7534685	.RING,RETAINING..... UOC:701	1
5	XAOZZ	19207	10885202	.TUBE ASSEMBLY..... UOC:701	1
6	XAOZZ	19207	10885201	.TUBE ASSEMBLY..... UOC:701	1
7	PAOZZ	19207	7534687	.PIN,STRAIGHT,HEADED..... UOC:70F	1
8	PAOZZ	19207	7534682	.PAWL,RATCHET,LEVELI..... UOC:701	2
9	PAOZZ	19207	7045152	.SPRING,HELICAL,COMP..... UOC:701	2
10	PAOZZ	19207	7534694	.HOUSING,RATCHET..... UOC:701	1
11	PAOZZ	19207	7534677	.SLEEVE,LOCK,LEVELIN..... UOC:701	1
12	XDOZZ	19207	7534686	.WASHER,FLAT..... UOC:701	1
13	PAOZZ	96906	MS51968-23	.NUT,PLAIN,HEXAGON..... UOC:701	1
14	PAOZZ	19207	7534675	.LEVER,MANUAL CONTRO..... UOC:701	1
15	PFOZZ	19207	7045149	..SPRING,HELICAL,COMP..... UOC:701	1
16	PFOZZ	00141	AK6	..BALL BEARING..... UOC:701	1
17	PAOZZ	19207	7534690	..PIN,STRAIGHT,HEADLE..... UOC:701	2

END OF FIGURE

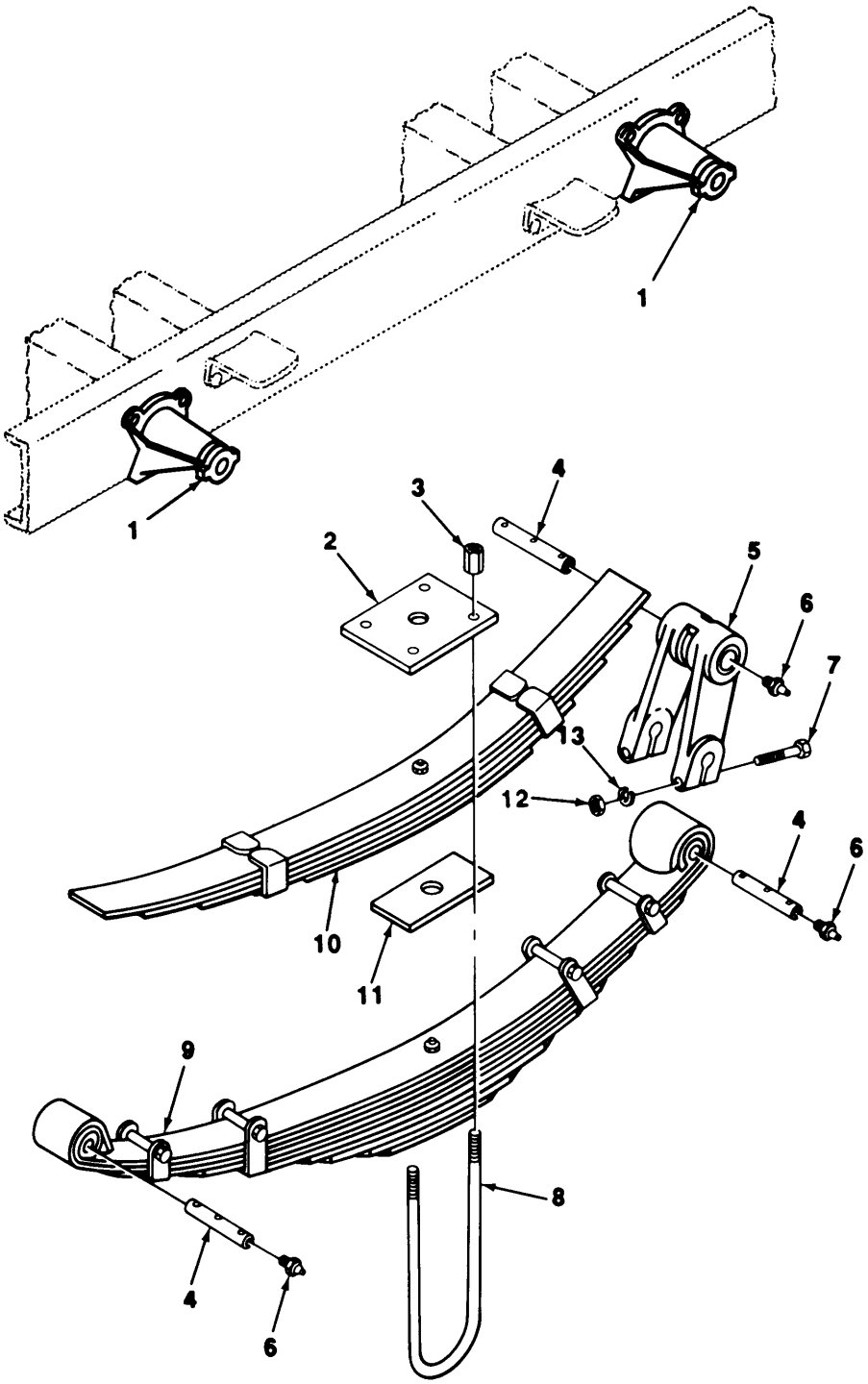

TA503086

FIGURE 28. MAIN AND AUXILIARY SPRINGS.

(1) ITEM NO	(2) SMR CODE	(3) CAGEC	(41 PART NUMBER	(5) DESCRIPTION AND USABLE ON CODES(UOC)	(6) QTY
				GROUP 16 SPRINGS AND SHOCK ABSORBERS	
				1601 SPRINGS	
				FIG. 28 MAIN AND AUXILIARY SPRINGS	
1	PFOZZ	19207	7979525	HANGER,SPRING,VEHIC.....	4
2	XDOZZ	19207	7979573	PLATE.....	2
3	PAOZZ	19207	7411041	NUT,PLAIN,HEXAGON.....	8
4	PAOZZ	56442	2C328	PIN,VEHICULAR LEAF.....	6
5	PAOZZ	56442	348S3	SHACKLE,LEAF SPRING W/BEARING.....	2
6	PAOZZ	96906	MS15001-1	FITTING,LUBRICATION.....	6
7	PAOZZ	96906	MS90727-68	SCREW,CAP,HEXAGON H.....	8
8	PAOZZ	19207	8327047	BOLT,U.....	4
9	PAOZZ	78500	5RE72E	SPRING ASSEMBLY,LEA MAIN.....	2
10	PAOZZ	19207	7411042	SPRING ASSEMBLY,LEA AUXILIARY.....	2
11	XDOZZ	19207	7979574	PLATE.....	2
12	PAOZZ	96906	MS51968-8	NUT,PLAIN,HEXAGON.....	8
13	PAOZZ	96906	MS35338-27	WASHER,LOCK.....	8

END OF FIGURE

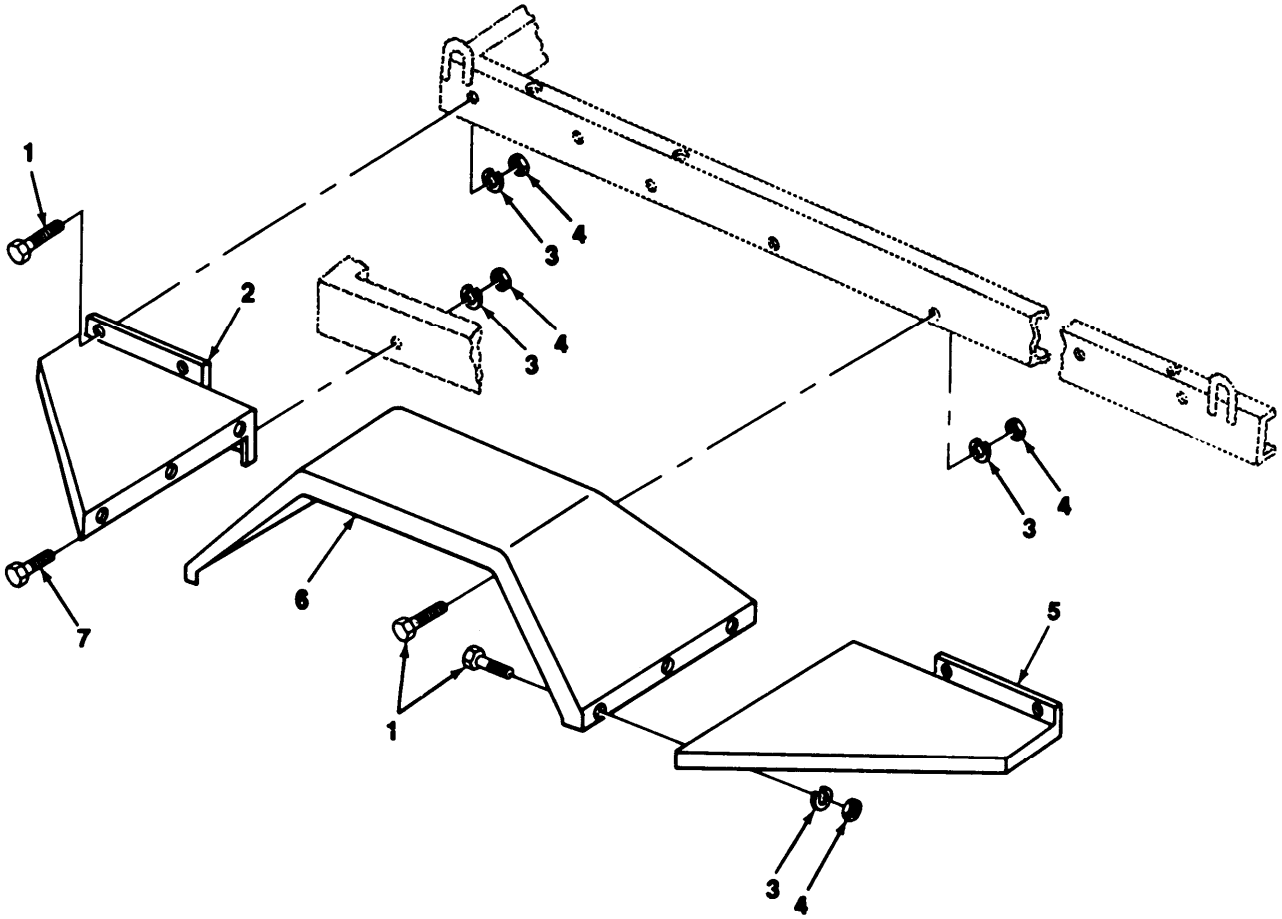

TA503087

FIGURE 29. WATER TANK FENDERS AND EXTENSIONS (M107A1, M107A2, M107A2C).

(1) ITEM NO	(2) SMR CODE	(3) CAGEC	(4) PART NUMBER	(5) DESCRIPTION AND USABLE ON CODES(UOC)	(6) QTY
				GROUP 18 BODY	
				1802 FENDERS	
				FIG. 29 WATER TANK FENDERS AND EXTENSIONS (M107A1, M107A29, M107A2C)	
1	PAOZZ	96906	MS90726-109	SCREW,CAP,HEXAGON H..... UOC:706,714,715	26
2	PAOZZ	19207	8384133	EXTENSION,FENDER..... UOC:706,714,715	2
3	PAOZZ	96906	MS35338-48	WASHER,LOCK..... UOC:706,714,715	30
4	PAOZZ	96906	MS51968-14	NUT,PLAIN,HEXAGON..... UOC:706,714,715	30
5	XBOZZ	19207	8384134	EXTENSION..... UOC:706,714,715	2
6	PAOZZ	19207	8384138	FENDER,VEHICULAR..... UOC:706,714,715	2
7	PAOZZ	96906	MS90727-111	SCREW,CAP,HEXAGON H..... UOC:706,714,715	4

END OF FIGURE

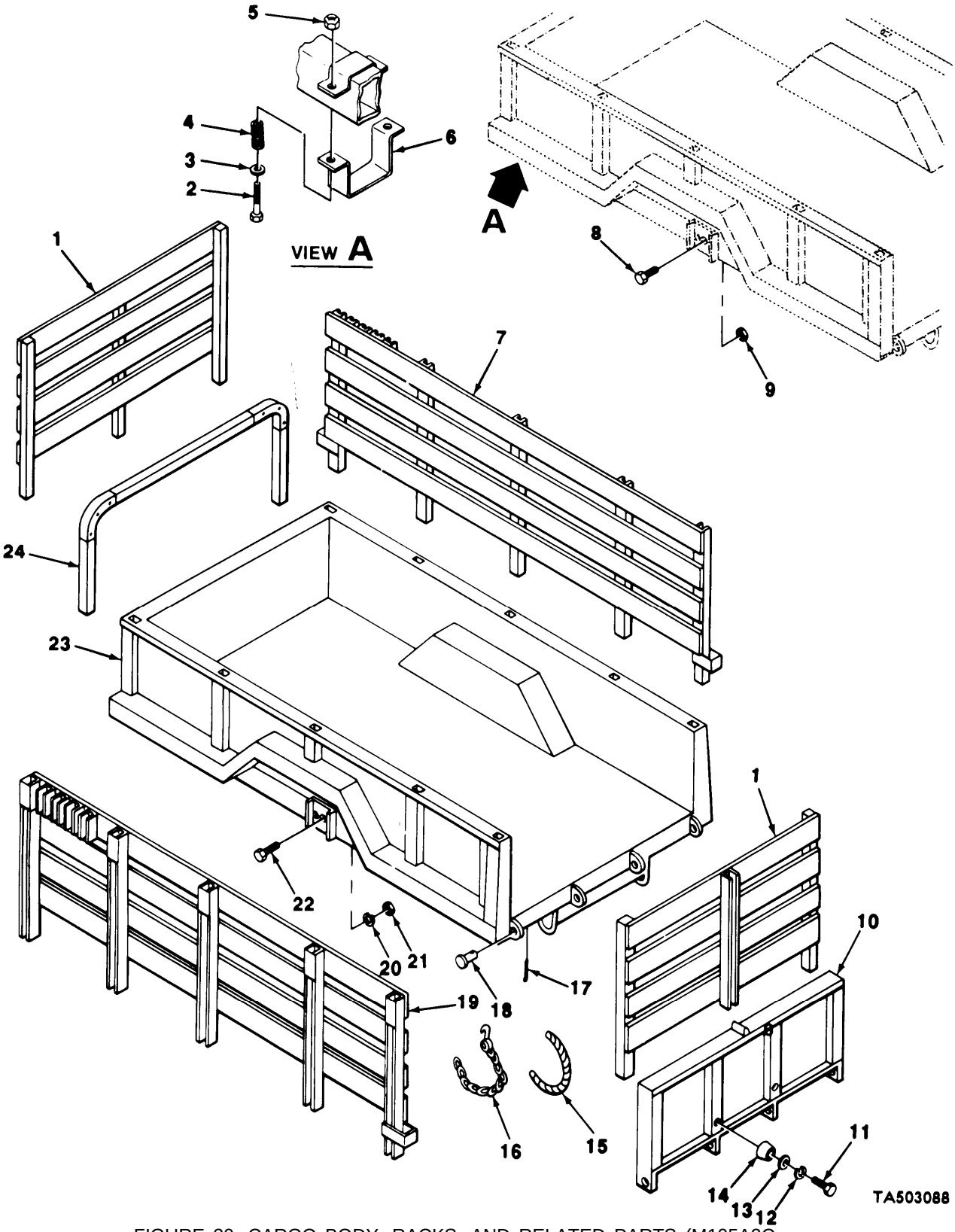

FIGURE 30. CARGO BODY, RACKS, AND RELATED PARTS (M105A2C, M105A1, M105A2).

(1) ITEM NO	(2) SMR CODE	(3) CAGEC	(4) PART NUMBER	(5) DESCRIPTION AND USABLE ON CODES(UOC)	(6) QTY
				1810 CARGO BODY	
				FIG. 30 CARGO BODY, RACKS, AND RELATED PARTS (M105A2C, M105A1, M105A2)	
1	PAOZZ	19207	8384072	SIDE RACK,VEHICLE B FRONT AND REAR. UOC:698,704,713	2
2	PAOZZ	96906	MS90726-232	BOLT,MACHINE..... UOC:704	4
3	XDOZZ	19207	8331951	WASHER..... UOC:704	4
4	XDOZZ	19207	8331949	SPRING..... UOC:704	4
5	PAOZZ	96906	MS51922-68	LOCKNUT..... UOC:704	4
6	XBOZZ	19207	8331947	BRACKET..... UOC:704	2
7	PAOZZ	19207	8384071	SIDE RACK,VEHICLE B..... UOC:698,704,713	1
8	PFFZZ	96906	MS90727-111	SCREW,CAP,HEXAGON H..... UOC:704	12
9	XDFZZ	19207	503388	LOCKNUT..... UOC:704	12
10	PAOZZ	19207	8331948	TAILGATE,VEHICLE BO..... UOC:698,704,713	1
11	PAOZZ	96906	MS90728-7	SCREW,CAP,HEXAGON H..... UOC:713	2
12	PFOZZ	96906	MS35338-44	WASHER,LOCK..... UOC:713	2
13	PAOZZ	96906	MS27183-10	WASHER,FLAT..... UOC:713	2
14	PAOZZ	19207	8689833	BUMPER,NONMETALLIC..... UOC:713	2
15	MOOZZ	19207	1705812-1	COVER,CHAIN MAKE FROM P/N CCC-C-419 UOC:698,704,713	2
16	PAOZZ	19207	8331950	CHAIN ASSEMBLY,SING TAILGATE..... UOC:698,704,713	2
17	PAOZZ	96906	MS24665-493	PIN,COTTER..... UOC:698,704,713	4
18	PFOZZ	19207	7411047	PIN,STRAIGHT,HEADED..... UOC:698,704,713	4
19	PAOZZ	19207	8384070	SIDE RACK,VEHICLE B..... UOC:698,704,713	1
20	PAFZZ	96906	MS35338-48	WASHER,LOCK..... UOC:698,713	10
21	PAFZZ	96906	MS51968-14	NUT,PLAIN,HEXAGON..... UOC:698,713	10
22	PAFZZ	96906	MS90727-111	SCREW,CAP,HEXAGON H..... UOC:698,713	10
23	PAFFF	19207	12355807	BODY,CARGO TRAILER..... UOC:698,704,713	1

(1) ITEM NO	(2) SMR CODE	(3) CAGEC	(4) PART NUMBER	(5) DESCRIPTION AND USABLE ON CODES(UOC)	(6) QTY
24	PAOZZ	19207	8331952	BOW,VEHICULAR TOP..... UOC:698,704,713	5

END OF FIGURE

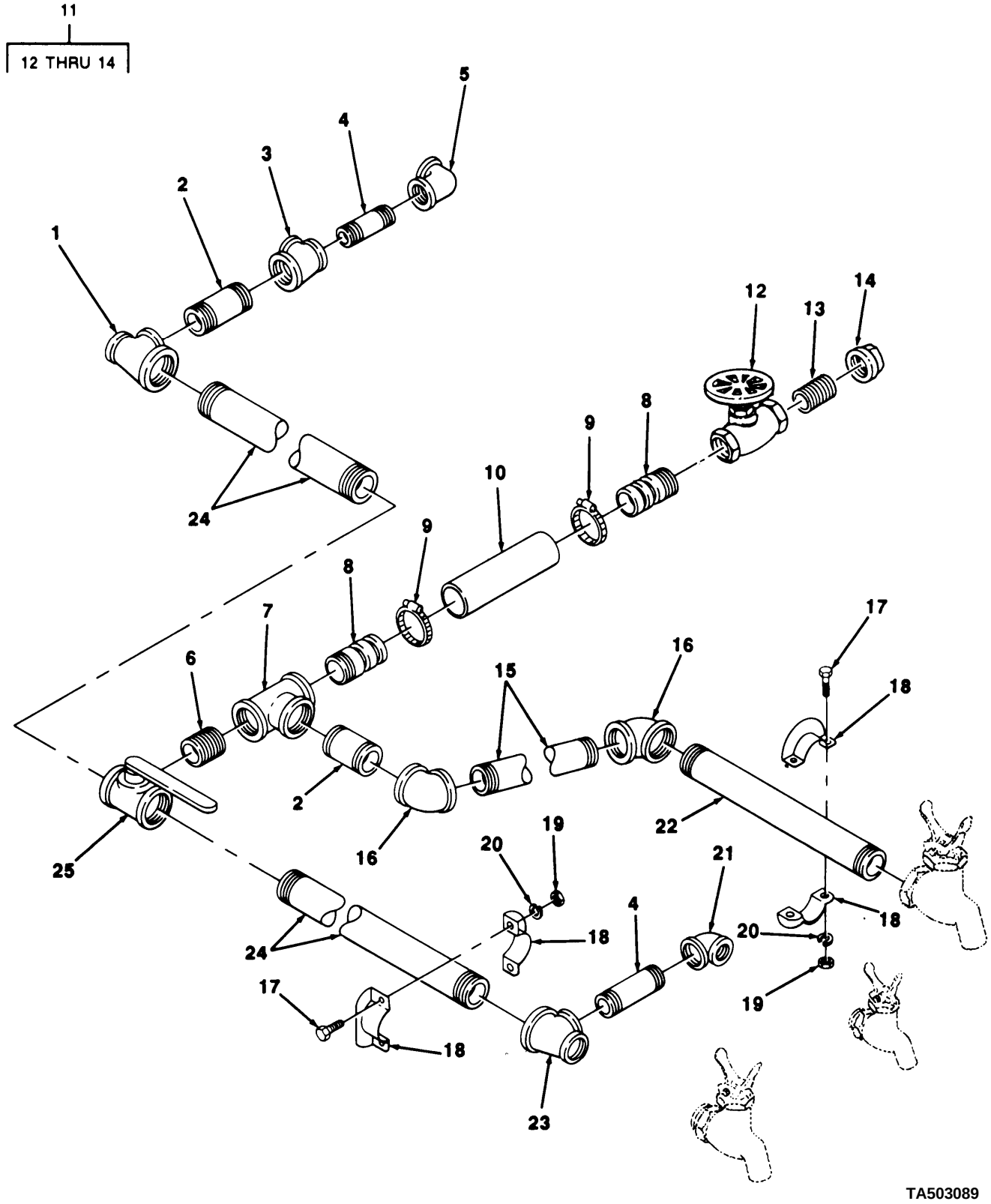

FIGURE 31. VALVE AND PIPING ASSEMBLY (M107A1, M107A2, M107A2C).

(A) ITEM NO	(2) SMR CODE	(3) CAGEC	(4) PART NUMBER	(5) DESCRIPTION AND USABLE ON CODES(UOC)	(6) QTY
				1811 TANK BODIES	
				FIG. 31 VALVE AND PIPING ASSEMBLY (M107A1, M107A2, M107A2C)	
1	PAOZZ	96906	MS39231-7	ELBOW,PIPE TEE..... UOC:706,714,715	1
2	XBOZZ	24617	219695	NIPPLE..... UOC:706,714,715	2
3	PAOZZ	15434	S962	PLUG,PIPE TEE..... UOC:706,714,715	1
4	XBOZZ	24617	219679	NIPPLE..... UOC:706,714,715	2
5	PAOZZ	90598	10517-2	ELBOW,PIPE..... UOC:706,714,715	1
6	PAOZZ	96906	MS51953-145	NIPPLE,PIPE..... UOC:706,714,715	1
7	XBOZZ	96906	MS90523-1Y3	TEE..... UOC:706,714,715	1
8	XDFZZ	19207	8384116	NIPPLE..... UOC:706,714,715	2
9	XDFZZ	19207	502921	CLAMP..... UOC:706,714,715	2
10	PAFZZ	23705	319271	HOSE,NONMETALLIC..... UOC:706,714,715	1
11	PAFFF	19207	8741749	VALVE,DISCHARGE,WAT..... UOC:706,714,715	1
12	XAFZZ	19207	12354281	.VALVE..... UOC:706,714,715	1
13	PAFZZ	96906	MS51846-118	.NIPPLE..... UOC:706,714,715	1
14	PAFZZ	19207	8683597	.INSULATOR,BUSHING..... UOC:706,714,715	1
15	XDOZZ	21450	443866	NIPPLE..... UOC:706,714,715	1
16	PAOZZ	81996	A2303-12-51PC18	ELBOW,PIPE..... UOC:706,714,715	2
17	PFOZZ	96906	MS90727-5	SCREW,CAP,HEXAGON H..... UOC:706,714,715	6
18	XDOZZ	19207	7979635	GUARD..... UOC:706,714,715	3
19	PAOZZ	96906	MS51968-2	NUT,PLAIN,HEXAGON..... UOC:706,714,715	6
20	XBOZZ	96906	MS35338-025	WASHER..... UOC:706,714,715	6
21	PAOZZ	96906	MS51813-10	ELBOW,PIPE TO TUBE..... UOC:706,714,715	1
22	PFOZZ	19207	7979633	PIPE,METALLIC TANK BODIES..... UOC:706,714,715	1
23	PAOZZ	19207	10944734	TEE,PIPE..... UOC:706,714,715	1
24	XBOZZ	81346	ASTM A53	PIPE,METALLIC.....	2

(1) ITEM NO	(2) SMR CODE	(3) CAGEC	(4) PART NUMBER	(5) DESCRIPTION AND USABLE ON CODE(UOC)	(6) QTY
				UOC:706,714,715	
25	PAOZZ	19207	7412255	VALVE,PLUG.....	1
				UOC:706,714,715	

END OF FIGURE

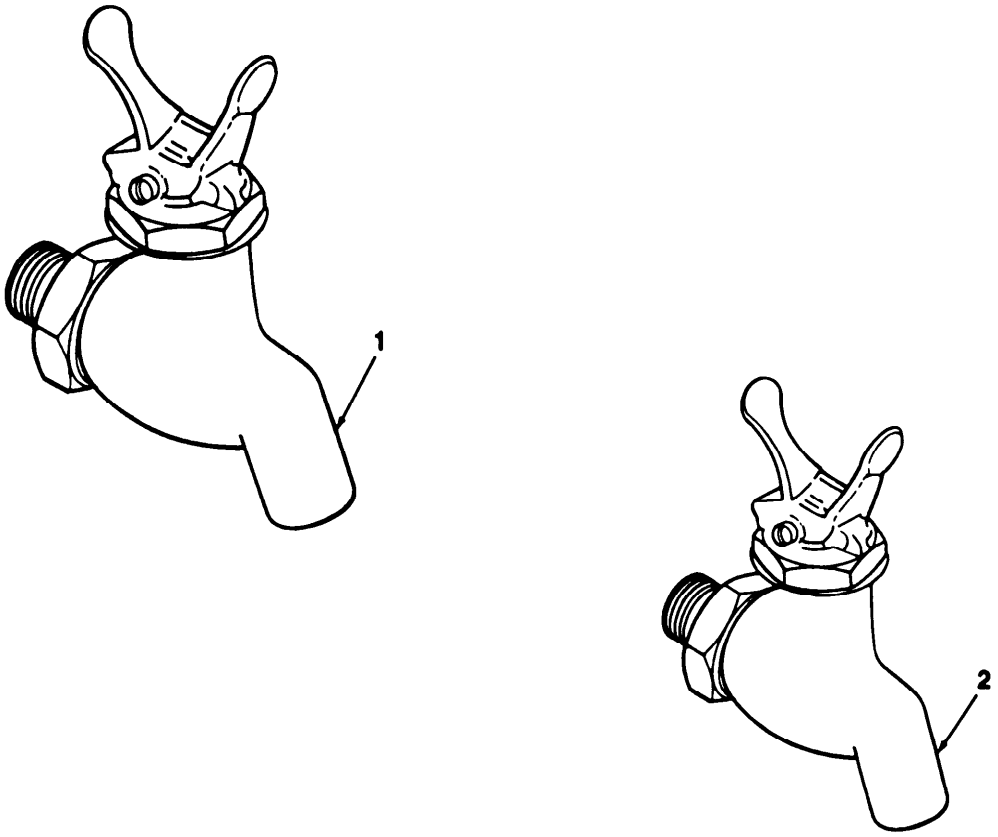

TA503090

FIGURE 32. HALF-INCH AND ONE-INCH FAUCET ASSEMBLY (M107A1, M107A2, M107A2C).

(1) ITEM NO	(2) SMR CODE	(3) CAGEC	(4) PART NUMBER	(5) DESCRIPTION AND USABLE ON CODE(OUC)	(6) QTY
				1811 TANK BODIES	
				FIG. 32 HALF-INCH AND ONE-INCH FAUCET ASSEMBLY (M107A1, M107A2, M107A2C)	
1	PAOZZ	86107	29-1	FAUCET,SINGLE (1.0 INCH)..... UOC:706,714,715	1
2	PAOZZ	19207	C7412237	FAUCET,SINGLE (0.50 INCH)..... UOC:706,714,715	4

END OF FIGURE

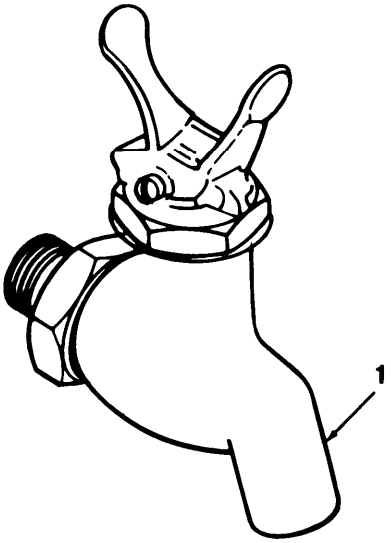

TA503091

FIGURE 33. FAUCET ASSEMBLY (M107A1, M107A2, M107A2C).

(1) ITEM NO	(2) SMR CODE	(3) CAGEC	(4) PART NUMBER	(5) DESCRIPTION AND USABLE ON CODES(UOC)	(6) QTY
				1811 TANK BODIES	
				FIG. 33 FAUCET ASSEMBLY (M107A1, M107A2, M107A2C)	
1	PAOZZ	19207	7412239	FAUCET,SINGLE (1.25 INCH)..... UOC:706,714,715	1

END OF FIGURE

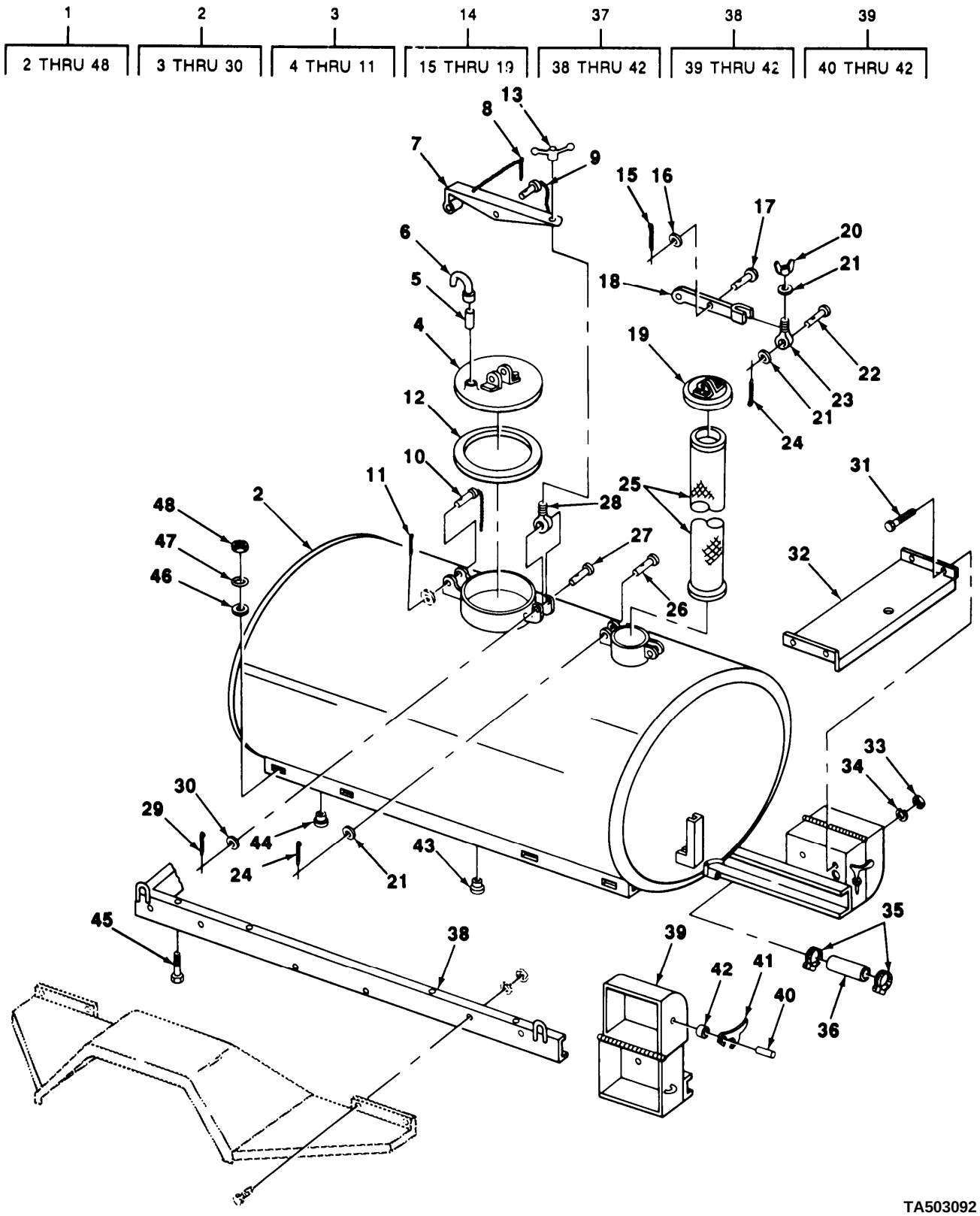

FIGURE 34. WATER TANK, TANK FRAME, AND RELATED PARTS
M107A2, M107A2C).

(1) ITEM NO	(2) SMR CODE	(3) CAGEC	(4) PART NUMBER	(5) DESCRIPTION AND USABLE ON CODES(UOC)	(6) QTY
				1811 TANK BODIES	
				FIG. 34 WATER TANK, TANK FRAME, AND RELATED PARTS (M107A1, M107A2, M107A2C)	
1	XDFFF	19207	8384144	TANK AND FRAME ASSY..... UOC:706,714,715	1
2	PAFFF	19207	8384097	.TANK UNIT,LIQUID DI..... UOC:706,714,715	1
3	PFFFF	19207	7979710	..DOOR,ACCESS..... UOC:706,714,715	1
4	PAFZZ	19207	7412233	...COVER,MANHOLE..... UOC:706,714,715	1
5	PAFZZ	19207	7412249	...NIPPLE,PIPE..... UOC:706,714,715	1
6	PAFZZ	19207	7039760	...BEND,TANK COVER,VEN..... UOC:706,714,715	1
7	PAFZZ	19207	7412247	...HINGE MANHOLE COVER..... UOC:706,714,715	1
8	PAFZZ	96906	MS24665-497	...PIN,COTTER..... UOC:706,714,715	2
9	XDFZZ	19207	7412283	...PIN AND CHAIN ASSEM..... UOC:706,714,715	1
10	PAFZZ	19207	7412295	...CHAIN ASSEMBLY,SING..... UOC:706,714,715	1
11	PAFZZ	96906	MS24665-283	...PIN,COTTER..... UOC:706,714,715	1
12	PAFZZ	19207	7412242	..SEAL,NONMETALLIC SP..... UOC:706,714,715	1
13	PAFZZ	19207	7412276	..NUT,PLAIN,WING..... UOC:706,714,715	1
14	PAOOO	19207	7412234	..COVER ASY W HINGE..... UOC:706,714,715	1
15	PAOZZ	96906	MS24665-283	...PIN,COTTER..... UOC:706,714,715	1
16	PAOZZ	96906	MS27183-14	...WASHER,FLAT..... UOC:706,714,715	1
17	XDOZZ	19207	7412286	...PIN,STRAIGHT,HEADED..... UOC:706,714,715	1
18	XAOZZ	19207	7979622	...HINGE ASSEMBLY..... UOC:706,714,715	1
19	XDOZZ	19207	7979660	...COVER ASSEMBLY..... UOC:706,714,715	1
20	PAOZZ	96906	MS35425-42	..NUT,PLAIN,WING..... UOC:706,714,715	1
21	PAOZZ	96906	MS27183-14	..WASHER,FLAT..... UOC:706,714,715	3
22	XDOZZ	19207	7412285	..PIN,STRAIGHT,HEADED..... UOC:706,714,715	1
23	PAOZZ	19207	7979634	..BOLT,EYE..... UOC:706,714,715	1

(1) ITEM NO	(2) SMR CODE	(3) CAGEC	(4) PART NUMBER	(5) DESCRIPTION AND USABLE ON CODES(UOC)	(6) QTY
24	PAOZZ	96906	MS24665-283	..PIN,COTTER..... UOC:706,714,715	2
25	PAOZZ	21530	S384	..STRAINER ELEMENT,SE..... UOC:706,714,715	
26	XDOZZ	19207	7412286	..PIN,STRAIGHT,HEADED WATER TANK... UOC:706,714,715	1
27	PFFZZ	19207	7412282	..PIN,STRAIGHT,HEADED..... UOC:706,714,715	1
28	PAFZZ	19207	7412228	..BOLT,EYE..... UOC:706,714,715	1
29	PAFZZ	96906	MS24665-493	..PIN,COTTER..... UOC:706,714,715	1
30	PFFZZ	96906	MS27183-18	..WASHER,FLAT..... UOC:706,714,715	1
31	PFOZZ	96906	MS90727-58	.SCREW,CAP,HEXAGON H..... UOC:706,714,715	4
32	PAOZZ	23705	321090	.PLATE..... UOC:706,714,715	1
33	PFOZZ	96906	MS51968-8	.NUT,PLAIN,HEXAGON..... UOC:706,714,715	4
34	PAOZZ	81718	H2525M	.WASHER,LOCK..... UOC:706,714,715	4
35	PAFZZ	96906	MS35842-13	.CLAMP,HOSE..... UOC:706,714,715	2
36	PAFZZ	23705	319271	.HOSE,NONMETALLIC..... UOC:706,714,715	
37	XDFFF	19207	8384143	.FRAME ASSEMBLY..... UOC:706,714,715	1
38	XDFFF	19207	8384113	..BOX AND FRAME ASSY..... UOC:706,714,715	1
38	XDFFF	19207	8384114	..BOX AND FRAME ASSY..... UOC:706,714,715	1
39	PAOOO	19207	8384106	...DOOR,ACCESS..... UOC:706,714,715	1
40	PFOZZ	19207	8331226	....PIN,SHOULDER,HEADED..... UOC:706,714,715	1
41	PFOZZ	19220	5710B	....HOOK,LOCKING,LEVER..... UOC:706,714,715	1
42	PAOZZ	19207	8384102	....SPACER,SLEEVE..... UOC:706,714,715	1
43	PAFZZ	19207	8741782	.PLUG,PIPE..... UOC:706,714,715	1
44	PAFZZ	19207	8331543	.MOUNT,RESILIENT..... UOC:706,714,715	8
45	PFFZZ	96906	MS90727-166	.SCREW,CAP,HEXAGON H..... UOC:706,714,715	8
46	PAFZZ	19207	8331544	.PACKING WITH RETAIN..... UOC:706,714,715	
47	PAFZZ	19207	8384130	.MOUNT,RESILIENT..... UOC:706,714,715	8
48	XDFZZ	19207	451027	.NUT,SELF LOCKING..... UOC:706,714,715	8

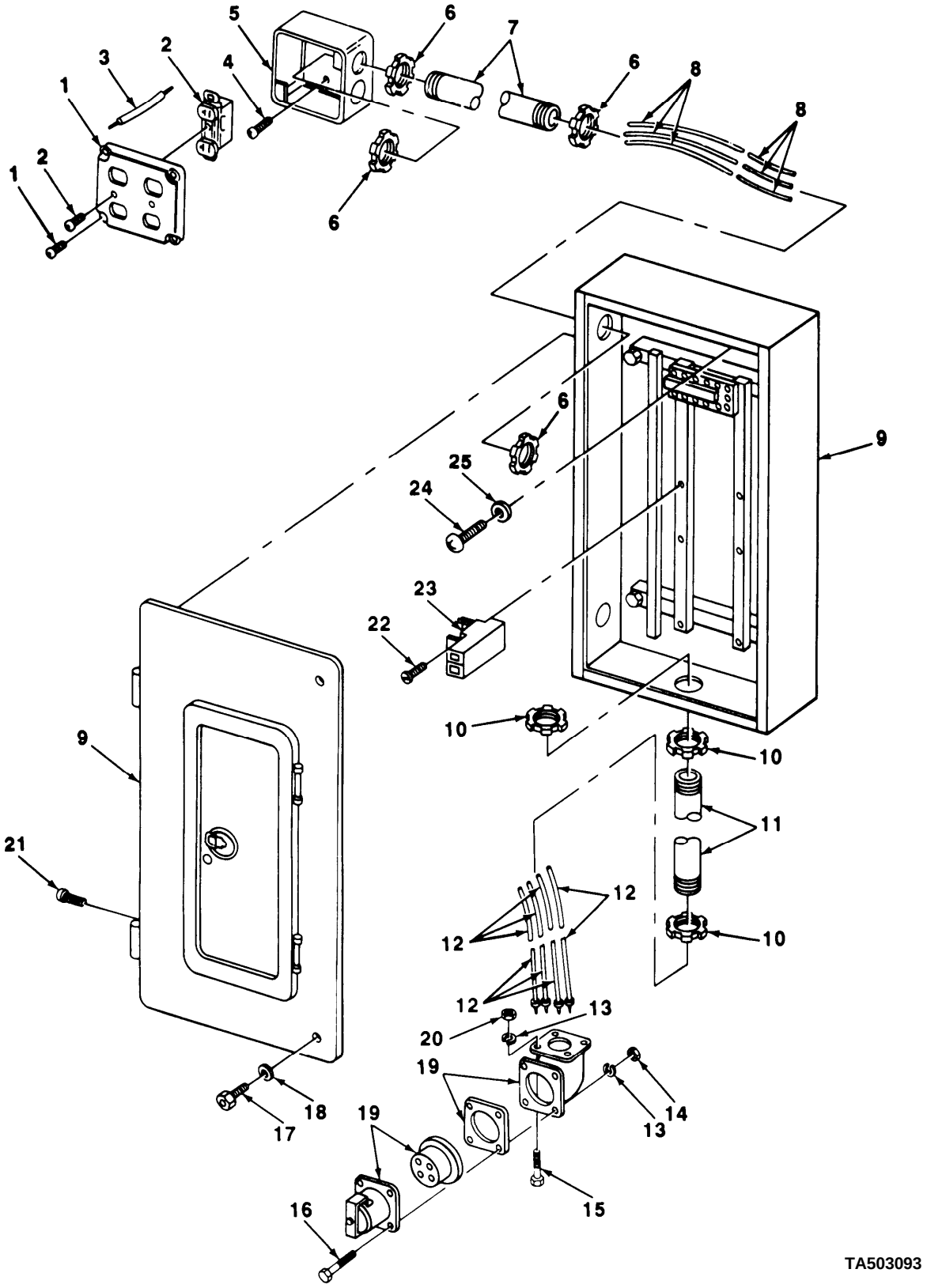

FIGURE 35. 110-VOLT ELECTRICAL SYSTEM (M448).

(1) ITEM NO	(2 I SMR CODE	(3) CAGEC	(4) PART NUMBER	{5) DESCRIPTION AND USABLE ON CODES((UOC)	(6) QTY
				1812 SPECIAL PURPOSE BODIES	
				FIG. 35 110-VOLT ELECTRICAL SYSTEM (M448)	
1	XDOZZ	19207	7335512	COVER,JUNCTION BOX..... UOC:701	1
2	PAOZZ	19207	8342291	CONNECTOR RECEPTACL..... UOC:701	2
3	MOOZZ	19207	7056678-10	CABLE,MAKE FROM P/N M13486-1-7..... UOC:701	1
4	PAOZZ	96906	MS90728-35	BOLT,MACHINE..... UOC:701	2
5	XDOZZ	19207	7335511	JUNCTION BOX..... UOC:701	1
6	XDOZZ	19207	7045791-2	BOX CONNECTOR,ELEC..... UOC:701	4
7	XDOZZ	19207	10922107	CONDUIT..... UOC:701	1
8	MOOZZ	19207	7056678-10-1	CABLE,MAKE FROM P/N M13486-1-7..... UOC:701	3
9	XDOZZ	19207	10922108	BOX..... UOC:701	1
10	PAOZZ	06542	FED-STD 156	BOX CONNECTOR,ELECT CONDUIT..... UOC:701	3
11	XDOZZ	19207	10885375	CONDUIT..... UOC:701	1
12	PAOZZ	19207	10885377	LEAD ASSEMBY,ELECT..... UOC:701	4
13	PAOZZ	96906	MS35338-44	WASHER,LOCK..... UOC:701	8
14	PAOZZ	96906	MS51967-2	NUT,PLAIN,HEXAGON..... UOC:701	4
15	PFOZZ	96906	MS90727-7	SCREW,CAP,HEXAGON,H..... UOC:701	4
16	PAOZZ	96906	MS90725-6	SCREW,CAP,HEXAGON H..... UOC:701	4
17	PAOZZ	19207	7336058	SET SCREW..... UOC:701	2
18	PAOZZ	19207	8666561	WASHER,PANEL FASTEN SCREW..... UOC:701	2
19	PAOZZ	90129	X8110-3	CONNECTOR,RECEPTACL..... UOC:701	1
20	PFOZZ	96906	MS51968-2	NUT PLAIN HEXAGON..... UOC:701	4
21	XDOZZ	19207	178434	SCREW, TAPPING, T..... UOC:701	4
22	PAOZZ	96906	MS35206-260	SCREW MACHINE CIRCUIT BREAKER..... UOC:701	4
23	PAOZZ	52737	P120	CIRCUIT BREAKER..... UOC:701	4

(1) ITEM NO	(2) SMR CODE	(3) CAGEC	(41 PART NUMBER	(5) DESCRIPTION AND USABLE ON CODES(UOC)	(6) QTY
				UOC:701	
25	PAOZZ	96906	MS27183-10	WASHER,FLAT.....	2
				UOC:701	

END Of FIGURE

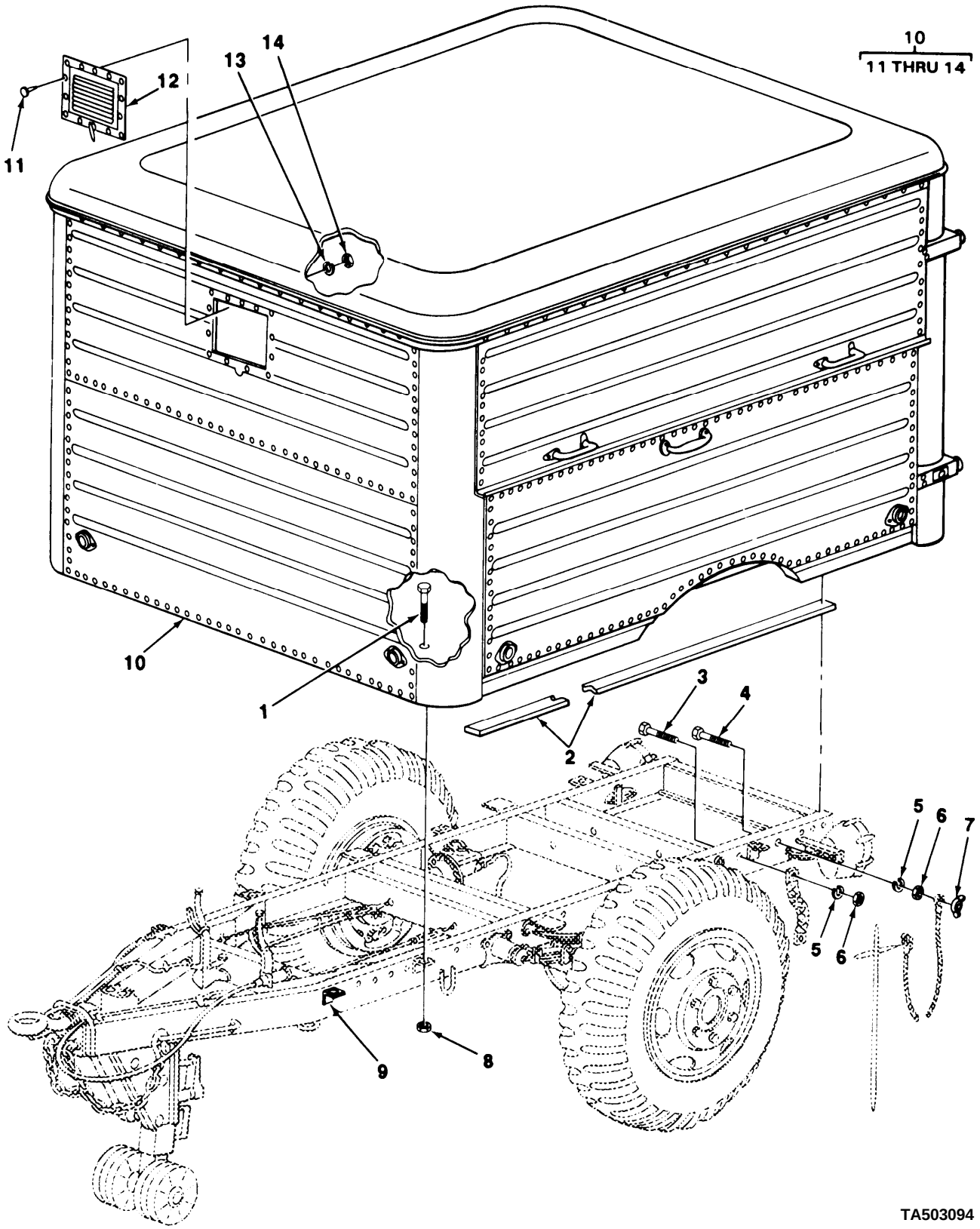

FIGURE 36. VAN BODY ATTACHING HARDWARE (M448).

(1) ITEM NO	(2) SMR CODE	(3) CAGEC	(4) PART NUMBER	(5) DESCRIPTION AND USABLE ON CODES(UOC)	(6) QTY
				1812 SPECIAL PURPOSE BODIES	
				FIG. 36 VAN BODY ATTACHING HARDWARE (M448)	
1	PAFZZ	96906	MS90728-113	SCREW,CAP,HEXAGON H..... UOC:701	8
2	XDFZZ	19207	10885353	LINER..... UOC:701	2
3	PAOZZ	96906	MS18154-58	SCREW,CAP,HEXAGON H..... UOC:701	1
4	PAOZZ	96906	MS90728-62	SCREW,HAP,HEXAGON H..... UOC:701	1
5	PAOZZ	96906	MS35333-42	WASHER,LOCK..... UOC:701	2
6	PAOZZ	96906	MS51967-8	NUT,PLAIN,HEXAGON..... UOC:701	2
7	PAOZZ	96906	MS35425-42	NUT,PLAIN,WING..... UOC:701	1
8	PAFZZ	96906	MS51922-33	NUT,SELF-LOCKING HE.....	8
9	XDFZZ	19207	10885351	ANGLE..... UOC:701	8
10	XDFFF	19207	10885350	BODY ASSEMBLY FOR COMPONENT PARTS, SEE FIG'S 37-43..... UOC:701	1
11	PFOZZ	96906	MS35207-261	.SCREW,MACHINE..... UOC:701	13
12	XDOZZ	19207	10923514	.VENTILATOR..... UOC:701	1
13	PFOZZ	96906	MS35338-43	.WASHER,LOCK..... UOC:701	13
14	PAOZZ	96906	MS35650-302	.NUT,PLAIN HEXAG..... UOC:701	13

END OF FIGURE

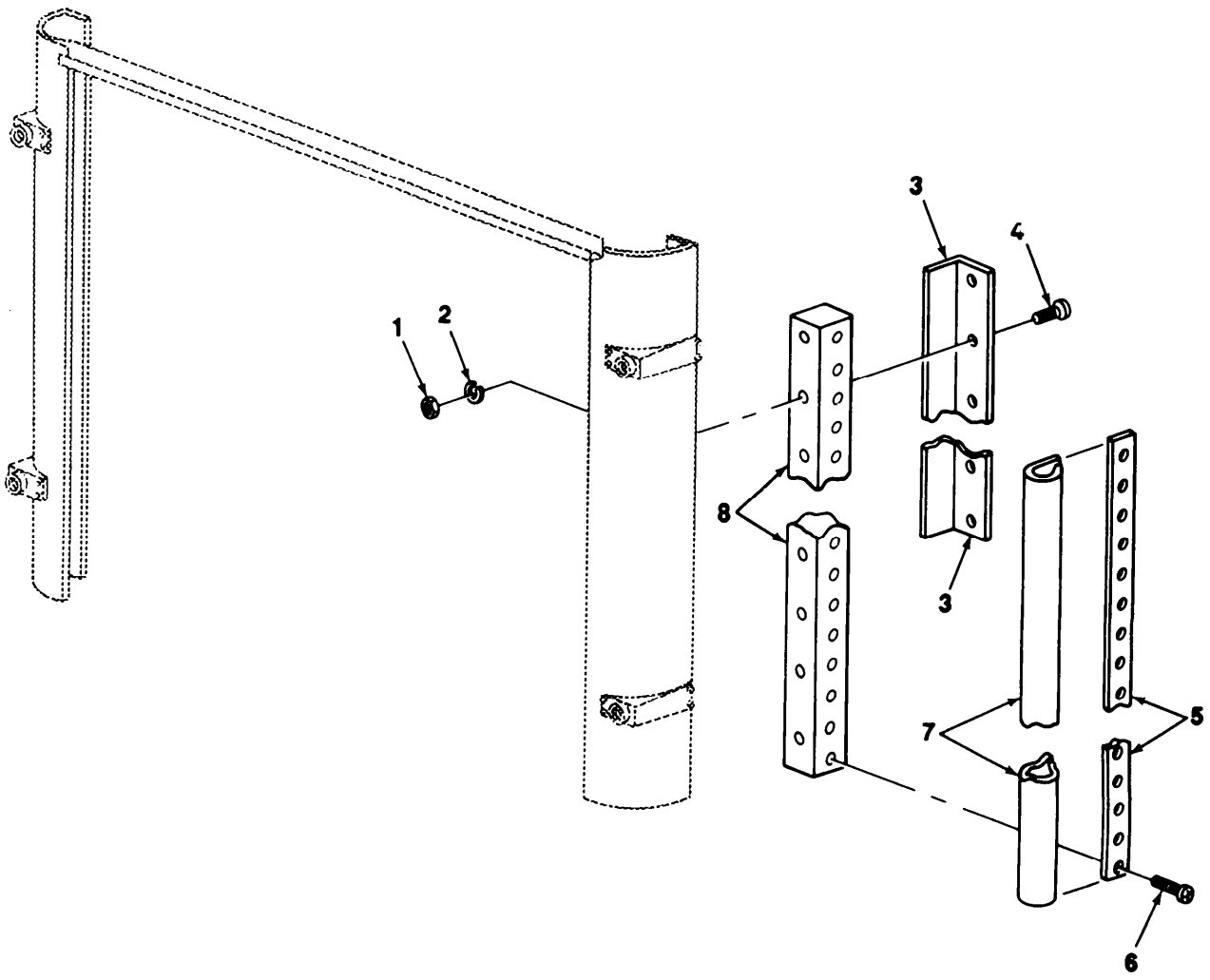

TA503095

FIGURE 37. VAN BODY REAR DOOR SEAL ASSEMBLY (M448)

(1) ITEM NO	(2} SMR CODE	(3) CAGEC	(4) PART NUMBER	(5) DESCRIPTION AND USABLE ON CODES(UOC)	(6) QTY
				1812 SPECIAL PURPOSE BODIES	
				FIG. 37 VAN BODY REAR DOOR SEAL ASSEMBLY (M448)	
1	PAOZZ	96906	MS51967-2	NUT,PLAIN,HEXAGON..... UOC:701	16
2	PAOZZ	96906	MS35333-40	WASHER,LOCK,..... UOC:701	16
3	XDOZZ	19207	10885355	CAPPING..... UOC:701	4
4	PAOZZ	96906	MS35206-283	SCREW,MACHINE..... UOC:701	16
5	XDOZZ	19207	10885357	RETAINER..... UOC:701	4
6	PFOZZ	96906	MS51861-37	SCREW,TAPPING,T..... UOC:701	36
7	PAOZZ	19207	7534653	SEAL,REAR DOOR..... UOC:701	4
8	XDOZZ	19207	10885354	FILLER..... UOC:701	4

END OF FIGURE

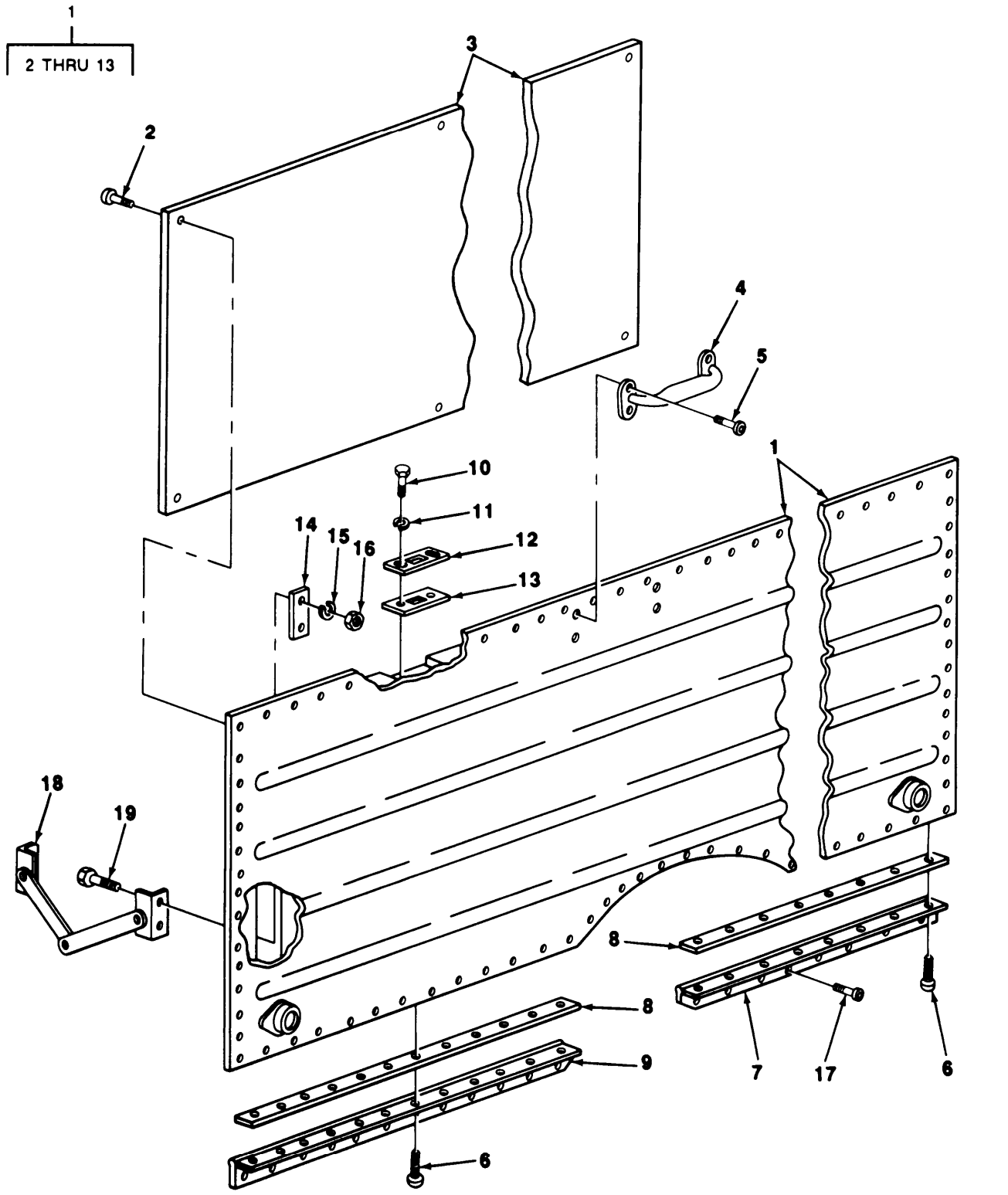

FIGURE 38. VAN BODY DOOR ASSEMBLY (M448).

(1) ITEM NO	(2) SMR CODE	(3) CAGEC	(4) PART NUMBER	(5) DESCRIPTION AND USABLE ON CODES(UOC)	(6) QTY
				1812 SPECIAL PURPOSE BODIES	
				FIG. 38 VAN BODY D00R ASSEMBLY (M448)	
1	XDUUO	19207	10885238	DOOR ASSEMBLY LEFT COMPONENTS SAME AS P/N 10885239 EXCEPT WHERE ANNOTATED..... UOC:701	1
1	XDOOO	19207	10885239	DOOR ASSEMBLY RIGHT..... UOC:701	1
2	PAOZZ	96906	MS35206-283	.SCREW,MACHINE..... UOC:701	6
3	XDOZZ	19207	10885292	.PANEL..... UOC:701	1
4	XDOZZ	19207	7003071	.HANDLE..... UOC:701	1
5	XDOZZ	19207	144897	.SCREW..... UOC:701	4
6	PAOZZ	96906	MS24617-53	.SCREW TAPPING THREA..... UOC:701	21
7	XDOZZ	19207	10885244	.HINGE RIGHT USE WITH P/N 10885239. UOC:701	1
7	XDOZZ	19207	10885293	.HINGE LEFT USE WITH P/N 10885238.. UOC:701	1
8	MOOZZ	19207	4518080-2	.RUBBER STRIP, MAKE FROM P/N 8380420..... UOC:701	2
9	XDOZZ	19207	10885388	.HINGE RIGHT USE WITH P/N 10885239. UOC:701	1
9	XDOZZ	19207	10885296	.HINGE LEFT USE WITH P/N 10885238.. UOC:701	1
10	PAOZZ	96906	MS90725-31	BOLT,MACHINE..... UOC:701	2
11	PAOZZ	96906	MS35333-41	.WASHER,LOCK..... UOC:701	2
12	XDOZZ	19207	7018991	.PLATE TOP..... UOC:701	1
13	XDOZZ	19207	7018992	.PLATE BOTTOM..... UOC:701	1
14	XDOZZ	19207	10929947	PLATE..... UOC:701	4
15	PAOZZ	96906	MS35338-45	WASHER,LOCK..... UOC:701	16
16	PAOZZ	96906	MS51967-5	NUT,PLAIN,HEXAGON..... UOC:701	16
17	PAOZZ	96906	MS24617-53	SCREW,TAPPING,THREA LEFT AND RIGHT. UOC:701	40
18	XDOZZ	19207	10885360	FOLDING ARM ASSEMBL..... UOC:701	4
19	PAOZZ	96906	MS90725-31	BOLT MACHINE..... UOC:701	16

END OF FIGURE

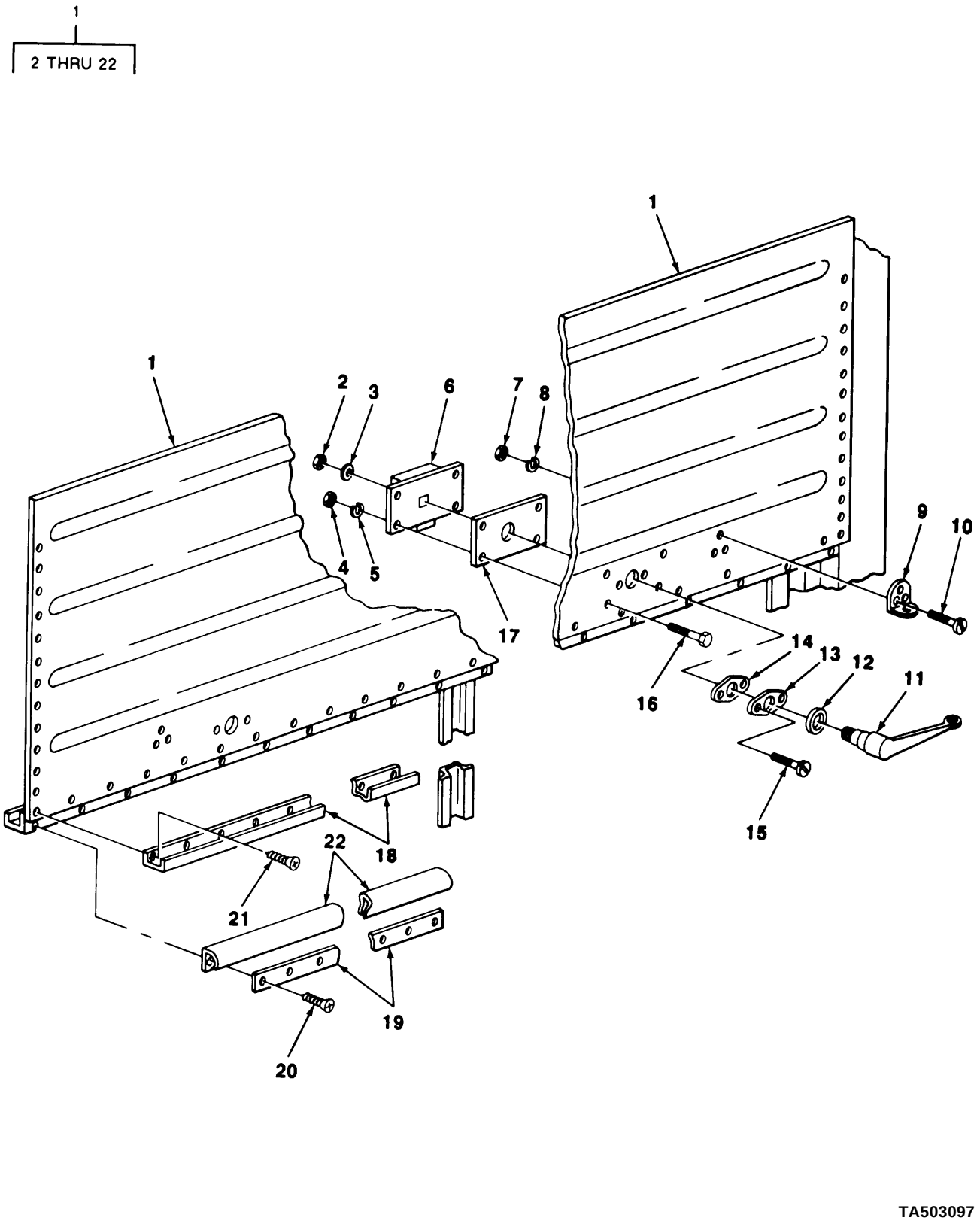

FIGURE 39. VAN BODY SIDE ASSEMBLY (M448).

(1) ITEM NO	(2) SMR CODE	(3) CAGEC	(4) PART NUMBER	(5) DESCRIPTION AND USABLE ON CODES(UOC)	(6) QTY
				1812 SPECIAL PURPOSE BODIES	
				FIG. 39 VAN BODY SIDE ASSEMBLY (M448)	
1	XDOOO	19207	10885340	SIDE ASSEMBLY PANEL..... UOC:701	2
2	PAOZZ	96906	MS51943-39	.NUT,SELF-LOCKING,HE..... UOC:701	2
3	PFOZZ	96906	MS27183-19	.WASHER,FLAT..... UOC:701	2
4	PFOZZ	96906	MS51968-5	.NUT,PLAIN,HEXAGON..... UOC:701	8
5	PFOZZ	96906	MS35338-45	.WASHER,LOCK..... UOC:701	8
6	XDOZZ	19207	10885356	.LOCK..... UOC:701	2
7	PFOZZ	96906	MS35649-202	.NUT,PLAIN,HEXAGON..... UOC:701	6
8	PFOZZ	96906	MS35338-43	.WASHER,LOCK..... UOC:701	6
9	XDOZZ	19207	70885237	.BRACKET..... UOC:701	2
10	PFOZZ	96906	MS35190-273	.SCREW,MACHINE..... UOC:701	6
11	XDOZZ	19207	10900796	.HANDLE..... UOC:701	2
12	PAOZZ	21450	582826	.GASKET..... UOC:701	2
13	PAOZZ	19207	8698433	.PLATE HANDLE..... UOC:701	2
14	PAOZZ	19207	8380431	.GASKET..... UOC:701	2
15	XDOZZ	96906	MS24649-35	.SCREW..... UOC:701	4
16	PFOZZ	96906	MS90727-35	.SCREW..... UOC:701	8
17	XDOZZ	19207	10885346	.SPACER..... UOC:701	2
18	XDOZZ	19207	10885347	.MOULDING..... UOC:701	1
19	XDOZZ	19207	10885357	.RETAINER..... UOC:701	1
20	PAOZZ	96906	MS51861-35	.SCREW,TAPPING,THREA..... UOC:701	28
21	PAOZZ	96906	MS24615-25	.SCREW,TAPPING,THREA..... UOC:701	28
22	XDOZZ	19207	754653	.SEAL..... UOC:701	1

END OF FIGURE

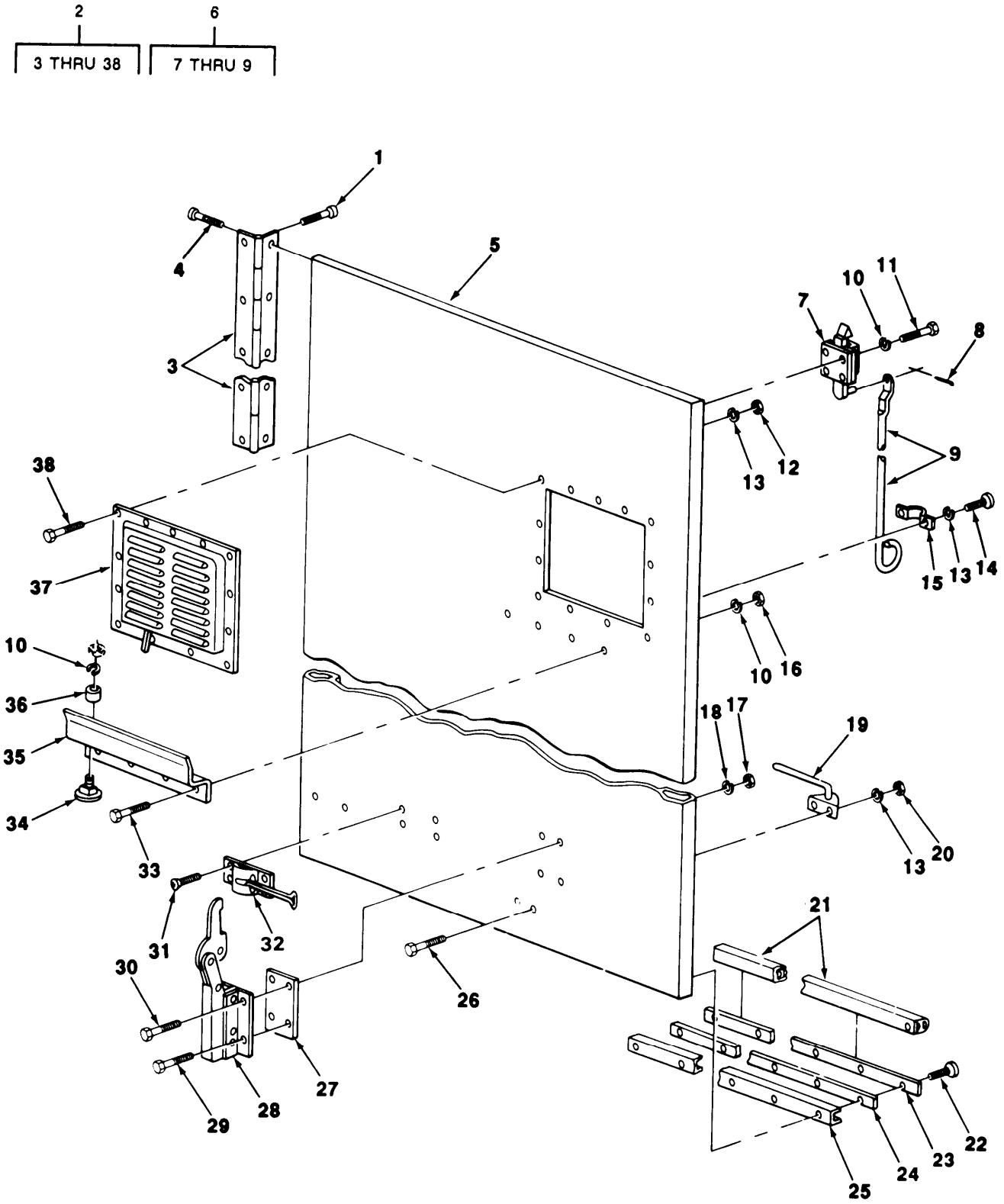

FIGURE 40. VAN BODY LEFT DOOR ASSEMBLY (M448).

(1) ITEM NO	(2) SMR CODE	(3) CAGEC	(4) PART NUMBER	(5) DESCRIPTfON AND USABLE ON CODES(UOC)	(6) QTY
				1812 SPECIAL PURPOSE BODIES	
				FIG. 40 VAN BODY LEFT DOOR ASSEMBLY (M448)	
1	PAOZZ	96906	MS24617-53	SCREW,TAPPING,THREA..... UOC:701	14
2	XDOOO	19207	10885207	DOOR ASSEMBLY LEFT..... UOC:701	1
3	XDOZZ	19207	10885225	.HINGE..... UOC:701	1
4	PAOZZ	96906	MS24629-57	.SCREW,TAPPING,THREA..... UOC:701	14
5	XDOZZ	19207	10885208	.DOOR..... UOC:701	1
6	PAOOO	19207	726735	.LATCH ASSY..... UOC:701	1
7	PFOZZ	19220	5607-51	..LATCH,RIM..... UOC:701	1
8	PAOZZ	96906	MS24665-134	..PIN,COTTER..... UOC:701	1
9	PFOZZ	19207	10871578	..CONTROL,ROD..... UOC:701	1
10	PAOZZ	96906	MS35338-44	.WASHER,LOCK..... UOC:701	10
11	PAOZZ	96906	MS90727-1	.SCREW,CAP,HEXAGON H..... UOC:701	4
12	PAOZZ	96906	MS35650-302	.NUT,PLAIN,HEXAGON..... UOC:701	13
13	PAOZZ	96906	MS35338-43	.WASHER,LOCK..... UOC:701	17
14	PAOZZ	96906	MS35207-261	.SCREW,MACHINE..... UOC:701	2
15	PAOZZ	19207	7264634	.STRAP,RETAINING..... UOC:701	1
16	PAOZZ	96906	MS51968-2	.NUT,PLAIN,HEXAGON..... UOC:701	4
17	PAOZZ	96906	MS51968-5	.NUT,PLAIN,HEXAGON..... UOC:701	2
18	PAOZZ	96906	MS35338-45	.WASHER,LOCK..... UOC:701	4
19	XDOZZ	19207	10885211	.HOLDER ASSEMBLY REAR DOOR..... UOC:701	1
20	PAOZZ	96906	MS35649-202	.NUT,PLAIN,HEXAGON..... UOC:701	2
21	PAOZZ	19207	7534653	.SEAL,REAR DOOR..... UOC:701	1
22	PFOZZ	96906	MS51861-37	.SCREW,TAPPING,THREA..... UOC:701	10
23	XDOZZ	19207	10885219	.RETAINER..... UOC:701	1
24	XDOZZ	19207	10885227	.SPACER.....	1

(1) ITEM NO	(2) SMR CODE	(3) CAGEC	(4) PART NUMBER	(5) DESCRIPTION AND USABLE ON CODES(UOC)	(6) QTY
				UOC:701	
25	XDOZZ	19207	10885220	.CHANNEL.....	1
				UOC:701	
26	PAOZZ	96906	MS35206-265	.SCREW,MACHINE.....	2
				UOC:701	
27	XDOZZ	19207	1092995-1	.PAD.....	1
				UOC:701	
28	PAOZZ	19207	7084828	.CLAMP,VAN LADDER.....	1
				UOC:701	
29	PAOZZ	96906	MS90726-37	.SCREW,CAP,HEXAGON.....	2
				UOC:701	
30	PAOZZ	96906	MS90727-35	.BOLT,MACHINE.....	2
				UOC:701	
31	PAOZZ	96906	MS24617-31	.SCREW,TAPPING,THREA.....	4
				UOC:701	
32	XDOZZ	19207	7335509	.LATCH.....	1
				UOC:701	
33	PAOZZ	96906	MS90727-4	.SCREW,CAP,HEXAGON H.....	4
				UOC:701	
34	PAOZZ	96906	MS35751-19	.BOLT,SQUARE NECK.....	2
				UOC:701	
35	PAOZZ	19207	8759465	.RACK ASSEMBLY REAR.....	1
				UOC:701	
36	PAOZZ	19207	7535620	.BUMPER,RUBBER LEFT.....	2
				UOC:701	
37	XDOZZ	19207	10923514	.VENTILATOR.....	1
				UOC:701	
38	PAOZZ	96906	MS35207-229	.SCREW,MACHINE.....	13
				UOC:701	

END OF FIGURE

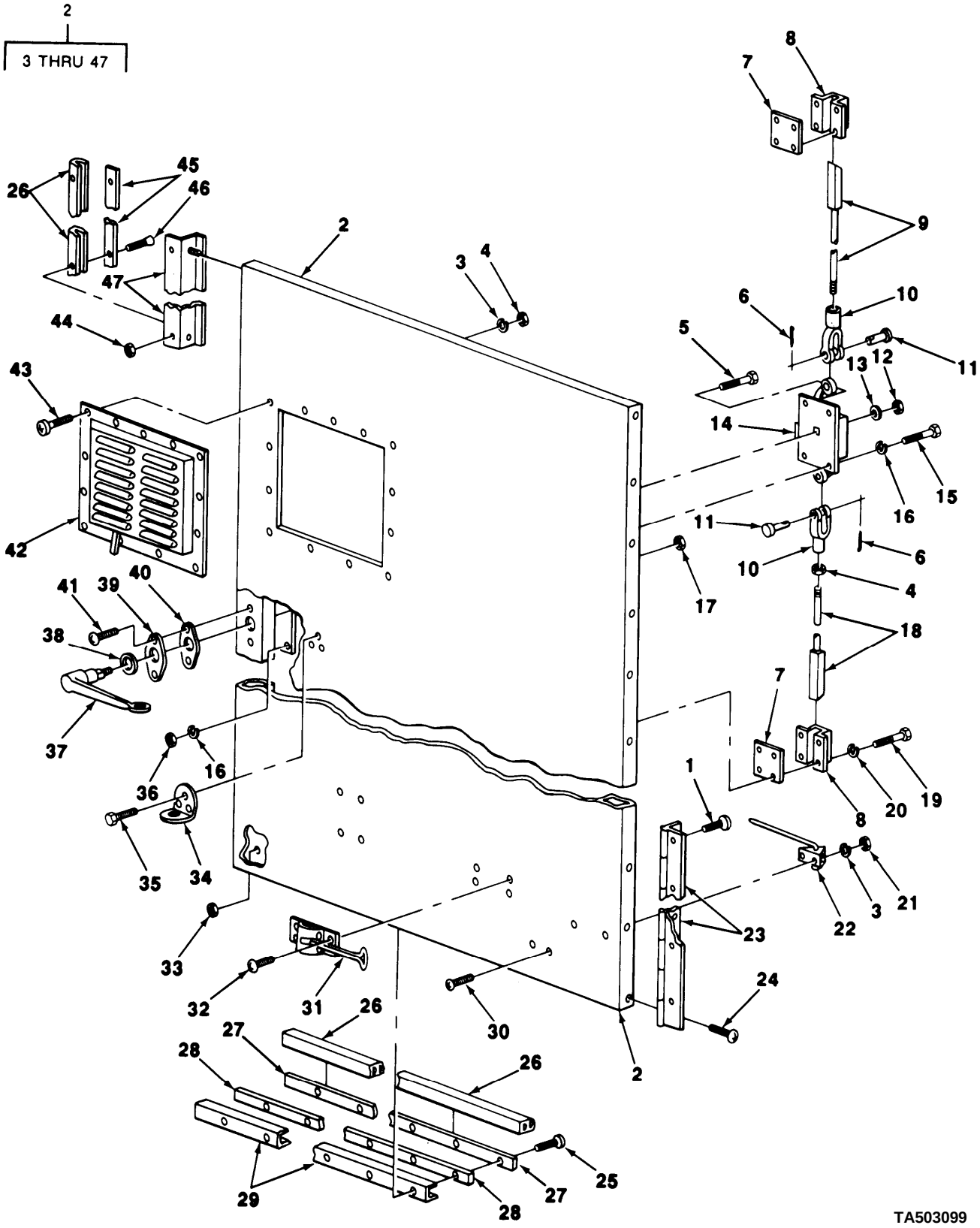

FIGURE 41. VAN BODY RIGHT DOOR ASSEMBLY (M448).

(1) ITEM NO	(2) SMR CODE	(3) CAGEC	(4) PART NUMBER	(5) DESCRIPTION AND USABLE ON CODES(UOC)	(6) QTY
				1812 SPECIAL PURPOSE BODIES	
				FIG. 41 VAN BODY RIGHT DOOR ASSEMBLY (M448)	
1	PAOZZ	96906	MS24617-53	SCREW,TAPPING,THREA..... UOC:701	14
2	XDOOO	19207	10885221	DOOR ASSEMBLY RIGHT..... UOC:701	1
3	PAOZZ	96906	MS35338-43	.WASHER,LOCK..... UOC:701	15
4	PAOZZ	96906	MS35650-302	.NUT,PLAIN,HEXAGON..... UOC:701	13
5	PAOZZ	96906	MS90728-29	.BOLT,MACHINE..... UOC:701	2
6	PAOZZ	96906	MS24665-353	.PIN,COTTER..... UOC:701	2
7	XDOZZ	19207	10922097	.SHIM..... UOC:701	2
8	XDOZZ	19207	8380496	.GUIDE ASSEMBLY..... UOC:701	2
9	XDOZZ	19207	10885228	.BAR..... UOC:701	1
10	PAOZZ	96906	MS35812-11	.CLEVIS,ROD END..... UOC:701	2
11	PAOZZ	96906	MS35810-6	.PIN,STRAIGHT,HEADED..... UOC:701	2
12	PAOZZ	96906	MS51922-33	.NUT,SELF-LOCKING,HE..... UOC:701	1
13	PAOZZ	96906	MS27183-19	.WASHER,FLAT..... UOC:701	1
14	PAOZZ	71843	2392A	.LATCH,MORTISE..... UOC:701	1
15	PAOZZ	96906	MS90725-31	.BOLT,MACHINE..... UOC:701	2
16	PAOZZ	96906	MS35338-45	.WASHER,LOCK..... UOC:701	4
17	PAOZZ	96906	MS35649-282	.NUT,PLAIN,HEXAGON..... UOC:701	3
18	XDOZZ	19207	10885229	.BAR..... UOC:701	1
19	PAOZZ	96906	MS90725-6	.SCREW,CAP,HEXAGON H..... UOC:701	8
20	PAOZZ	96906	MS35338-44	.WASHER,LOCK..... UOC:701	8
21	PAOZZ	96906	MS35649-202	.NUT,PLAIN,HEXAGON..... UOC:701	2
22	XDOZZ	19207	10885211	.HOLDER ASSEMBLY..... UOC:701	1
23	XDOZZ	19207	10885225	.HINGE..... UOC:701	1
24	PAOZZ	96906	MS24629-57	.SCREW,TAPPING,THREA.....	14

(1) ITEM NO	(2) SMR CODE	(3) CAGEC	(4) PART NUMBER	(5) DESCRIPTION AND USABLE ON CODES(UOC)	(6) QTY
				UOC:701	
25	PFOZZ	96906	MS51861-37	.SCREW,TAPPING,THREA.....	10
				UOC:701	
26	PAOZZ	19207	7534653	.SEAL REAR DOOR.....	[illegible]
				UOC:701	
27	XDOZZ	19207	10885219	.RETAINER.....	[illegible]
				UOC:701	
28	XDOZZ	19207	10885227	.SPACER.....	1
				UOC:701	
29	XDOZZ	19207	10885220	.CHANNEL.....	1
				UOC:701	
30	PAOZZ	96906	MS35206-265	.SCREW,MACHINE.....	2
				UOC:701	
31	XDOZZ	19207	10885282	.LATCH.....	1
				UOC:701	
32	PAOZZ	96906	MS24629-38	.SCREW,TAPPING,THREA.....	4
				UOC:701	
33	PAOZZ	96906	MS51967-2	.NUT,PLAIN,HEXAGON.....	8
				UOC:701	
34	XDOZZ	19207	10885237	.BRACKET.....	1
				UOC:701	
35	PAOZZ	96906	MS35190-253	.SCREW,MACHINE.....	3
				UOC:701	
36	PAOZZ	96906	MS51967-5	.NUT,PLAIN,HEXAGON.....	2
				UOC:701	
37	XDOZZ	19207	10900797	.HANDLE.....	[illegible]
				UOC:701	
38	PFOZZ	21450	582826	.RING.....	1
				UOC:701	
39	PAOZZ	19207	8698433	.PLATE HANDLE.....	1
				UOC:701	
40	PAOZZ	19207	8380431	.GASKET.....	1
				UOC:701	
41	PAOZZ	96906	MS24629-36	.SCREW,TAPPING,THREA.....	2
				UOC:701	
42	XDOZZ	19207	10923514	.VENTILATOR.....	1
				UOC:701	
43	PAOZZ	96906	MS35207-261	.SCREW,MACHINE.....	13
				UOC:701	
44	PFOZZ	96906	MS35650-382	.NUT,PLAIN,HEXAGON.....	16
				UOC:701	
45	XDOZZ	19207	10885218	.RETAINER PLATE.....	1
				UOC:701	
46	PAOZZ	96906	MS35207-242	.SCREW.....	16
				UOC:701	
47	XDOZZ	19207	10885231	.SEAL CHANNEL.....	1
				UOC:701	

END OF FIGURE

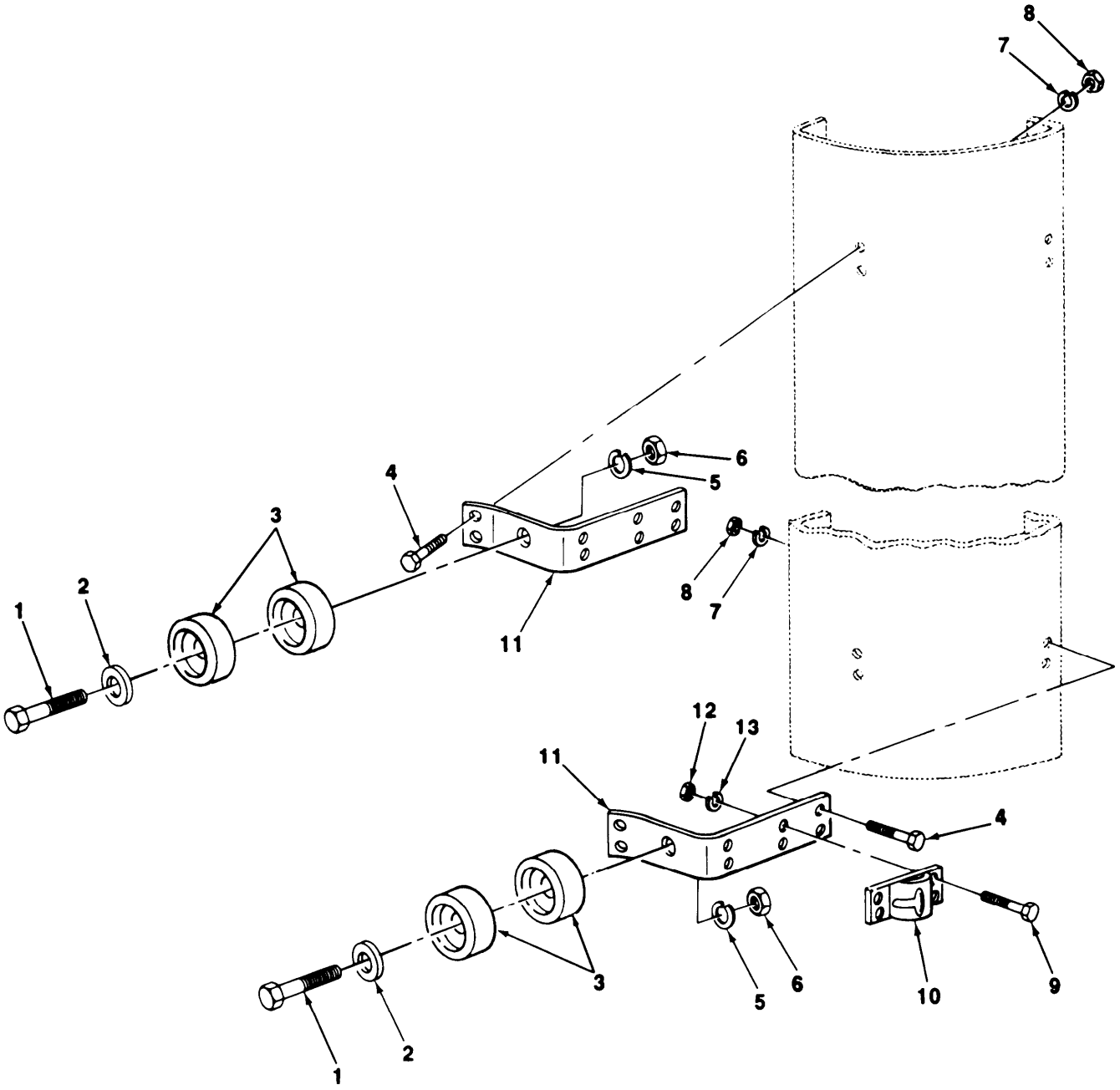

TA503100

FIGURE 42. VAN BODY BRACKET ASSEMBLY (M448).

(1) ITEM NO	(2) SMR CODE	(3) CAGEC	(4) PART NUMBER	(5) DESCRIPTION AND USABLE ON CODES(UOC)	(6) QTY
				1812 SPECIAL PURPOSE BODIES	
				FIG. 42 VAN BODY BRACKET ASSEMBLY (M448)	
1	PFOZZ	96906	MS35291-41	SCREW..... UOC:701	4
2	PAOZZ	96906	MS27183-13	WASHER,FLAT..... UOC:701	4
3	PAOZZ	19207	7535643	BUMPER,RUBBER VAN B..... UOC:701	8
4	PAOZZ	96906	MS90725-33	BOLT,MACHINE..... UOC:701	16
5	PAOZZ	96906	MS35337-26	WASHER,LOCK..... UOC:701	4
6	PAOZZ	23040	33797S7	NUT,PLAIN,HEXAGON..... UOC:701	4
7	PAOZZ	96906	MS35338-45	WASHER,LOCK..... UOC:701	16
8	PAOZZ	96906	MS51967-5	NUT,PLAIN,HEXAGON..... UOC:701	16
9	PAOZZ	96906	MS35226-64	SCREW,MACHINE..... UOC:701	8
10	XDOZZ	19207	10885381	CLIP..... UOC:701	2
11	XDOZZ	19207	10885321	HINGE..... UOC:701	4
12	PAOZZ	96906	MS35650-302	NUT,PLAIN,HEXAGON..... UOC:701	8
13	PAOZZ	96906	MS35338-43	WASHER,LOCK..... UOC:701	8

END OF FIGURE

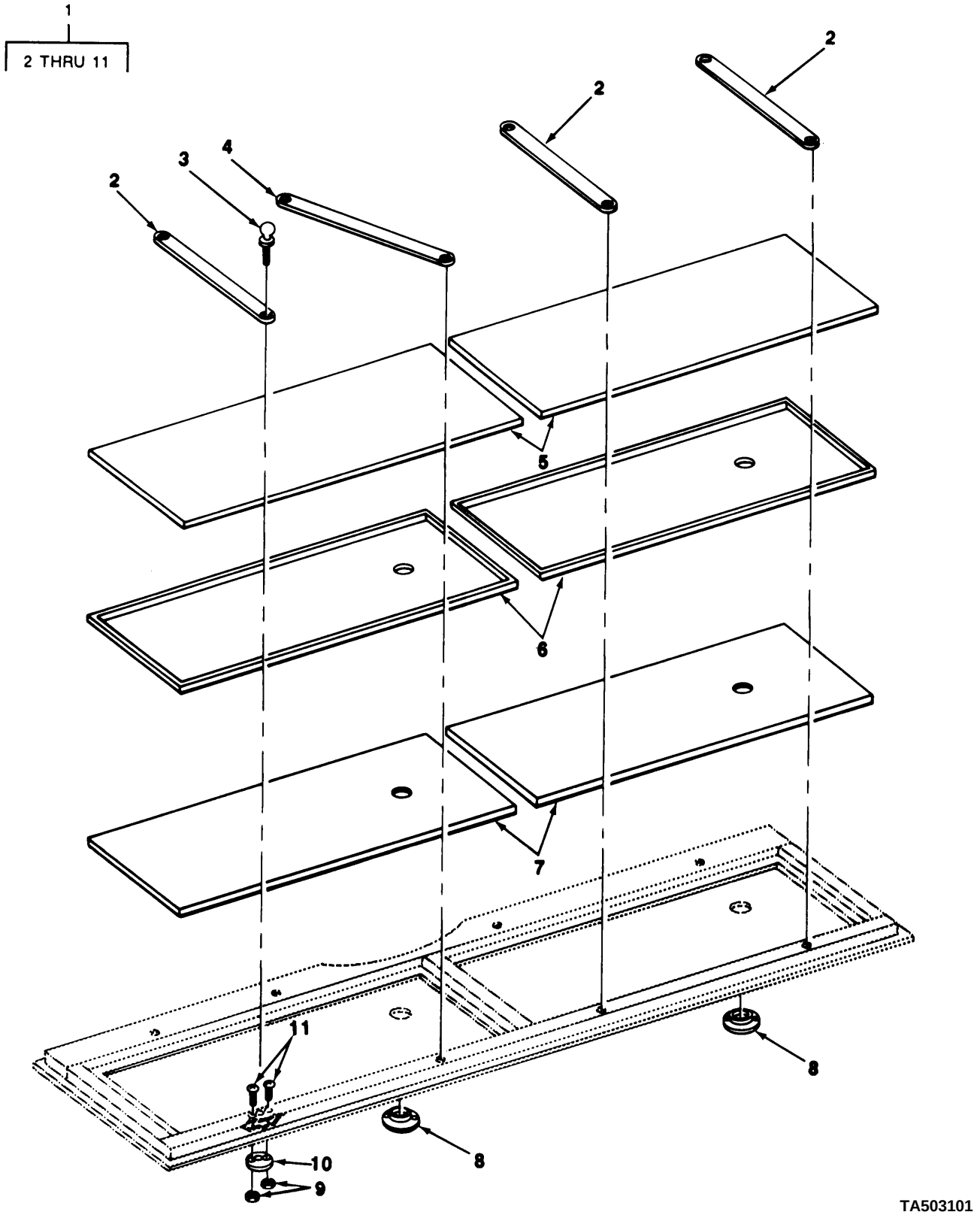

FIGURE 43. LOWER SIDE DOOR ASSEMBLY BATTERY SHOP VAN (M448).

(1) ITEM NO	(2) SMR CODE	(3) CAGEC	(4) PART NUMBER	(5) DESCRIPTION AND USABLE ON CODES(UOC)	(6) QTY
				1812 SPECIAL PURPOSE BODIES	
				FIG. 43 LOWER SIDE DOOR ASSEMBLY BATTERY SHOP VAN (M448)	
1	XDOOO	19207	10885392	DOOR,BATTERY ASSY..... UOC:701	2
2	XAOZZ	19207	10885398	.BAND..... UOC:701	3
3	PAOZZ	19207	10885400	.THUMBSCREW SIDE DOOR..... UOC:701	8
4	XAOZZ	19207	10885399	.BAND..... UOC:701	1
5	XAOZZ	19207	10885397	.COVER..... UOC:701	2
6	XAOZZ	19207	10885393	.PAN..... UOC:701	2
7	XAOZZ	19207	10885396	.LINER..... UOC:701	2
8	PAOZZ	96906	MS35645-1	.CAP,FILLER OPENING BATTERY DOOR DRAIN..... UOC:701	2
9	PAOZZ	96906	MS35650-362	.NUT,PLAIN,HEXAGON..... UOC:701	16
10	PAOZZ	94222	17-10015-13	.NUT,SHEET SPRING..... UOC:701	8
11	PAOZZ	96906	MS35191-239	.SCREW,MACHINE SIDE..... UOC:701	16

END OF FIGURE

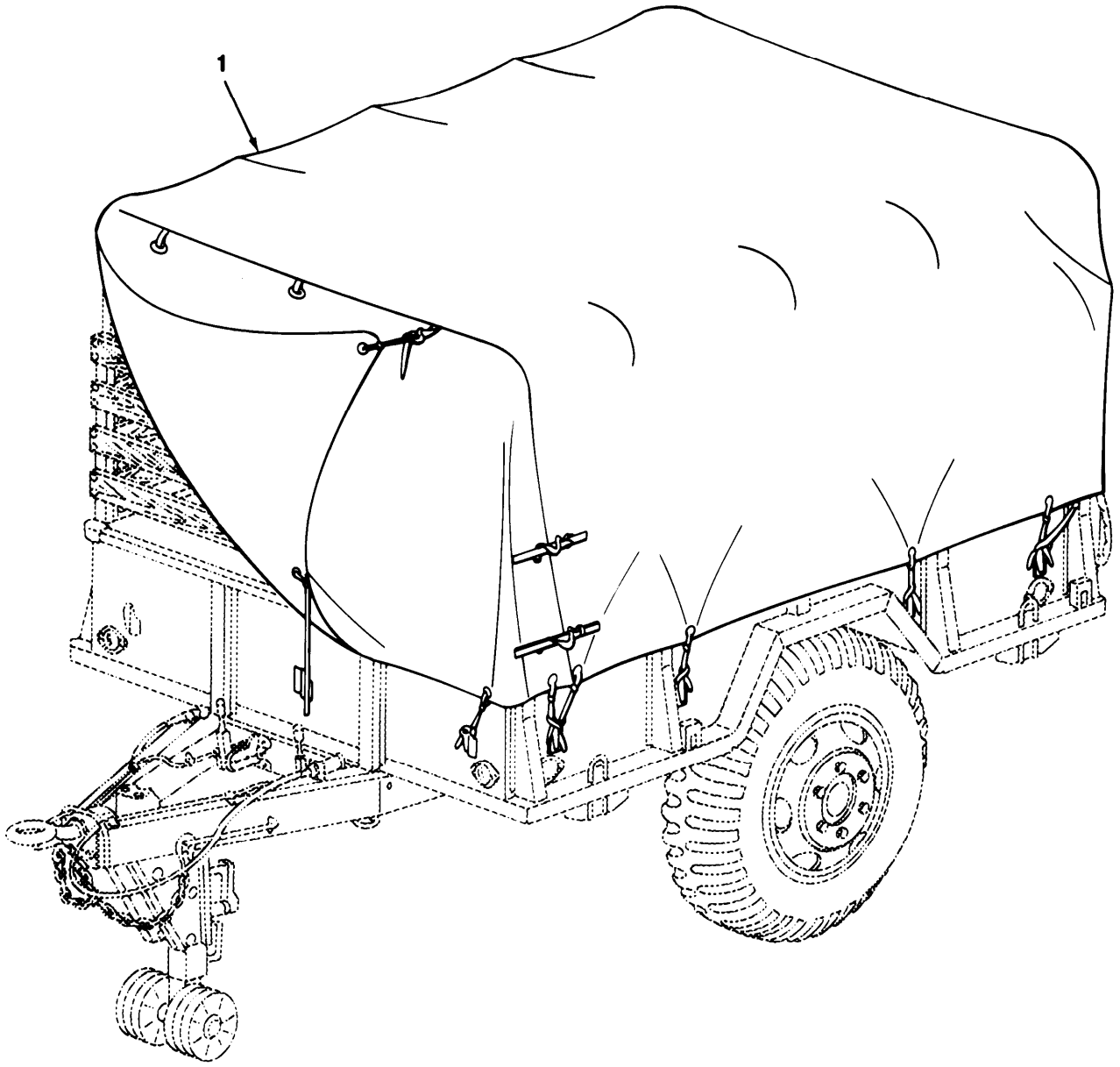

TA503102

FIGURE 44. PAULIN (M105A1, M105A2, M105A2C).

(1) ITEM NO	(2) SMR CODE	(3) CAGEC	(4) PART NUMBER	(5) DESCRIPTION AND USABLE ON CODES(UOC)	(6) QTY
				GROUP 22 BODY AND CHASSIS ACCESSORY ITEMS	
				2201 CANVAS ITEMS	
				FIG. 44 PAULIN (M105A1, M105A2, M105A2C)	
1	PAOFF	19207	7979840	COVER, FITTED, VEHICU BODY	1
1	PAOFF	19207	7979840–1	COVER, FITTED, TAN	1
				UOC 698,704, 713 (DESERT USE ONLY)	

END OF FIGURE

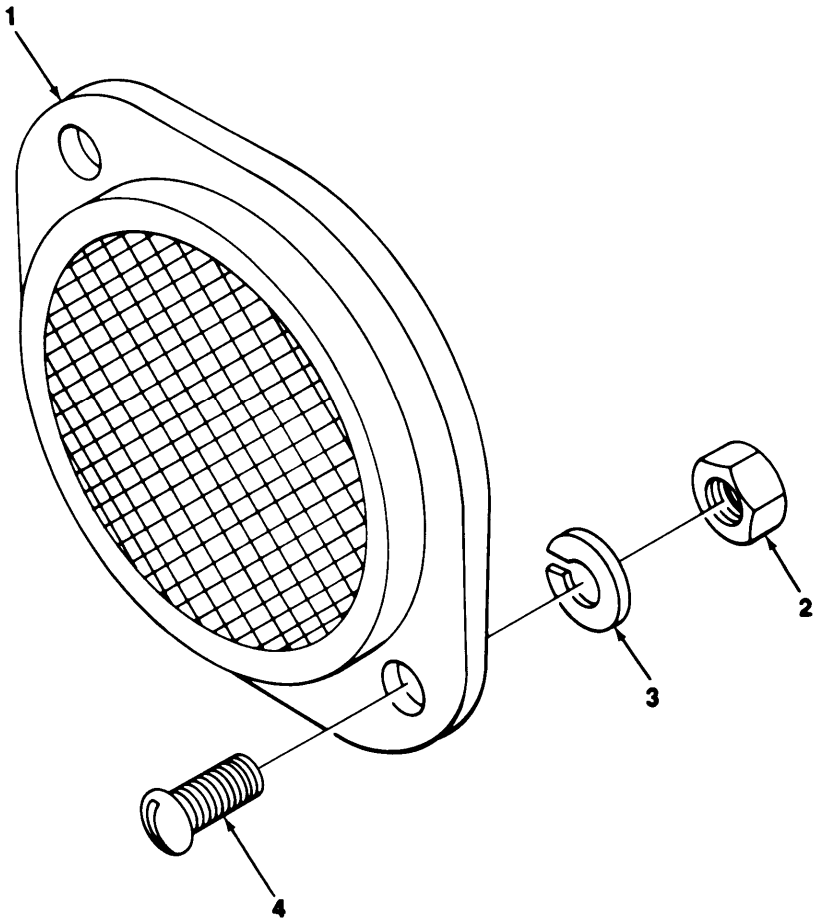

TA503103

FIGURE 45. REFLECTORS (M105A2, M105A2C, M448).

(1) ITEM NO	(2) SMR CODE	(3) CAGEC	(4) PART NUMBER	(5) DESCRIPTION AND USABLE ON CODES(UOC)	(6) QTY
				2202 ACCESSORY ITEMS	
				FIG. 45 REFLECTORS (M105A2) M105A2C, M448)	
1	PAOZZ	96906	MS35387-1	REFLECTOR,INDICATIN RED..... UOC:698,701,713	4
1	PAOZZ	96906	MS35387-2	REFLECTOR,INDICATIN AMBER..... UOC:698,701,713	2
2	PAOZZ	96906	MS51968-2	NUT,PLAIN,HEXAGON..... UOC:713	12
2	PAOZZ	96906	MS51967-2	NUT,PLAIN,HEXAGON..... UOC:698	12
3	PAOZZ	96906	MS35338-44	WASHER,LOCK..... UOC:698,713	12
4	PAOZZ	96906	MS24617-31	SCREW,TAPPING,THREA..... UOC:701	4
4	PAOZZ	96906	MS35207-280	SCREW,MACHINE..... UOC:713	12
4	PAOZZ	96906	MS35206-279	SCREW,MACHINE..... UOC:698	12
4	PAOZZ	96906	MS51861-44	SCREW,MACHINE..... UOC:701	4

END OF FIGURE

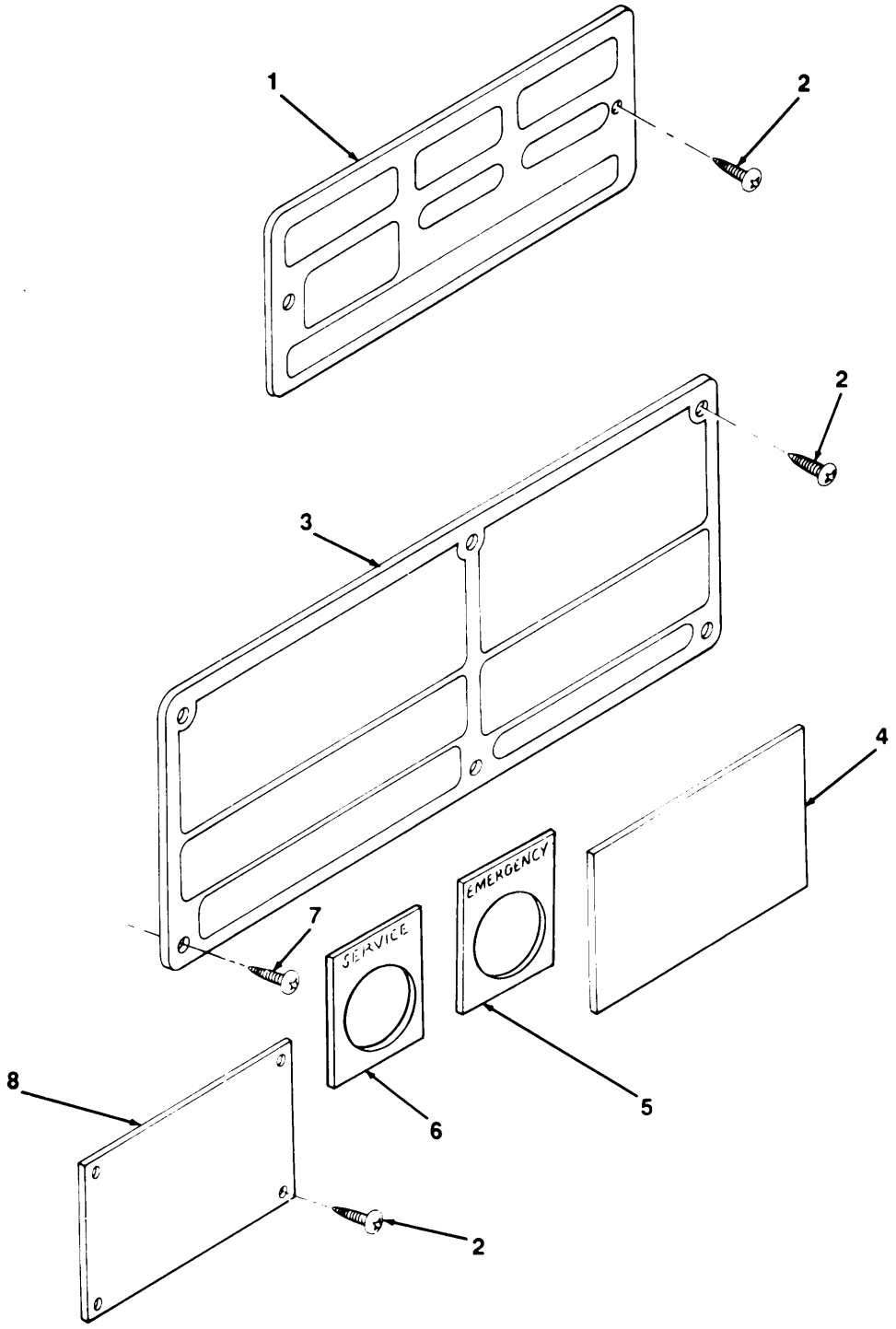

TA503104

FIGURE 46. DATA PLATES.

(1) ITEM NO	(2) SMR CODE	(3) CAGEC	(4) PART NUMBER	(5) DESCRIPTION AND USABLE ON CODES(UOC)	(6) QTY
				2210 DATA PLATES	
				FIG. 46 DATA PLATES	
1	PAOZZ	19207	7996977	PLATE,INSTRUCTION..... UOC:698,701,702,704,706,711,713,714, 715	1
1	PAOZZ	19207	7979373	PLATE,IDENTIFICATIO CHASSIS SERVICE UOC:704,714	1
1	PAOZZ	19207	7979735	PLATE,IDENTIFICATIO..... UOC:706	1
2	PAOZZ	96906	MS51861-35	SCREW,TAPPING,THREA.....	10
3	PAOZZ	19207	8683588	PLATE,IDENTIFICATIO..... UOC:715	1
3	PAOZZ	19207	8384434	PLATE,IDENTIFICATIO..... UOC:702	1
3	PAOZZ	19207	8683587	PLATE,IDENTIFICATIO..... UOC:698	1
3	PAOZZ	19207	8384426	PLATE,IDENTIFICATIO..... UOC:706	1
3	PAOZZ	19207	8384437	PLATE,IDENTIFICATIO..... UOC:706	1
3	PAOZZ	19207	8742442	PLATE,IDENTIFICATIO..... UOC:713	1
3	PAOZZ	19207	8742444	PLATE,IDENTIFICATIO PUBLICATION AND SHIPPING DATA..... UOC:711,713	2
3	PAOZZ	19207	8384424	PLATE,IDENTIFICATIO..... UOC:704	1
3	PAOZZ	19207	12355591	PLATE,TRANSPORTATIO.....	1
3	PAOZZ	19207	12331770	PLATE,INSTRUCTION TRANSPORTATION...	1
3	PAOZZ	19207	8683590	PLATE,IDENTIFICATIO..... UOC:698	1
3	XDOZZ	19207	8742445	PLATE,IDENTIFICATIO..... UOC:714	1
3	PAOZZ	19207	8683589	PLATE,IDENTIFICATIO..... UOC:715	1
3	XDOZZ	23705	325046	PLATE,IDENTIFICATIO..... UOC:704	1
3	PAOZZ	19207	8742443	PLATE,IDENTIFICATIO..... UOC:714	1
3	PAOZZ	19207	10885378	PLATE,IDENTIFICATIO..... UOC:701	1
4	XDOZZ	19207	10884699	PLATE,IDENTIFICATIO..... UOC:701	1
5	PAOZZ	96906	MS53007-2	PLATE,IDENTIFICATIO EMERGENCY..... UOC:711,713,714	1
6	PAOZZ	96906	MS53007-1	PLATE,IDENTIFICATIO SERVICE..... UOC:711,713,714	1
7	PAOZZ	21450	441201	SCREW.....	6
8	PAOZZ	19207	12355971	PLATE,TRANSPORTATIO..... UOC:711	1

END OF FIGURE

(1) ITEM NO	(2) SMR CODE	(3) CAGEC	(4) PART NUMBER	(5) DESCRIPTION AND USABLE ON CODES(UOC)	(6) QTY
				GROUP 94 REPAIR KITS	
				9401 REPAIR KITS	
				FIG. KITS	
	PAOZZ	40342	RN13A	PARTS KIT,FLUID PRE.....	1
				UOC:701,702,704,706,711,713,714,715	
				FILTER ELEMENT,FLUI(1) 19-21	
				GASKET (1) 19-24	
				SPRING,HELICAL,COMP(1) 19-23	

END OF FIGURE

(1) ITEM NO	(2) SMR CODE	(3) CAGEC	(4) PART NUMBER	(5) DESCRIPTION AND USABLE ON CODES(UOC)	(6) QTY
				GROUP 95 GENERAL USE STANDARDIZED PARTS	
				9501 BULK MATERIEL	
				FIG. BULK	
1	PAOZZ	81348	CCC-C-419	CLOTH, DUCK..... UOC:698,704,713	V
2	PAOZZ	06853	246115	HOSE, NONMETALLIC..... UOC:698,701,702,704,706,711,713,714, 715	V
3	PAOZZ	19207	8380420	RUBBER STRIP..... UOC:701	V
4	PAOZZ	81349	MIL-T-3520	TUBE, METALLIC..... UOC:701,702,704,706,711,713,714,715	V
5	PAOZZ	81349	M13486-1-7	WIRE, ELECTRICAL..... UOC:701	V

END OF FIGURE

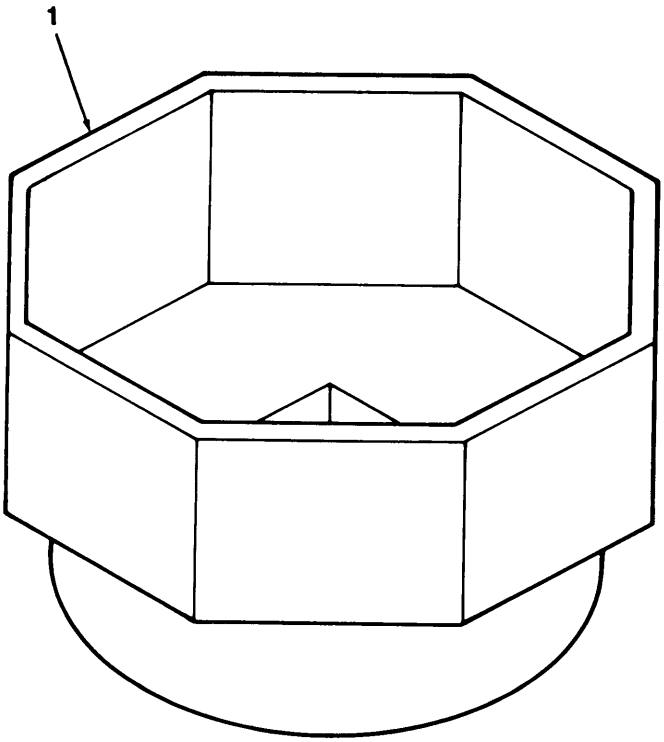

TA503105

FIGURE 47. SPECIAL TOOLS.

(1) ITEM NO	(2) SMR CODE	(3) CAGEC	(4) PART NUMBER	(5) DESCRIPTION AND USABLE ON CODES(UOC)	(6) QTY
				GROUP 26 TOOLS AND TEST EQUIPMENT	
				2604 SPECIAL TOOLS	
				FIG. 47 SPECIAL TOOLS	
1	PAOZZ	19207	7950946	SOCKET,SOCKET WRENC.....	2
				END OF FIGURE	

CROSS–REFERENCE INDEXES

NATIONAL STOCK NUMBER INDEX

STOCK NUMBER	FIG	ITEM
2590-00-004-6841	4	1
5306-00-012-0741	11	6
5315-00-013-7258	34	8
4730-00-013-7397	13	10
5310-00-014-5850	26	9
5315-00-018-7988	30	17
	34	29
6240-00-019-0877	1	6
	2	5
	3	7
6240-00-019-3093	3	5
4610-00-020-5375	37	7
	41	26
2530-00-021-2366	20	1
2530-00-026-0200	12	14
2530-00-026-0251	22	20
2530-00-026-0255	22	3
	22	2
5306-00-027-0722	40	34
2530-00-036-0297	7	1
5340-00-040-2364	4	17
5340-00-040-2365	4	18
2540-00-040-2414	34	41
2540-00-040-2417	34	32
5340-00-040-2690	11	14
5340-00-040-2691	11	14
2530-00-040-2692	11	15
2530-00-040-2693	11	15
4730-00-044-4715	31	3
5310-00-044-6284	24	2
6240-00-044-6914	1	5
	1	12
	3	4
5310-00-045-3296	36	13
	39	8
	40	13
	41	3
	42	13
4730-00-050-4203	28	6
4730-00-050-4208	25	8
9905-00-050-8793	46	3
5306-00-051-4077	39	16
	40	30
5305-00-052-6921	40	4
	41	24
5305-00-052-6922	16	28
	35	24
5340-00-057-2890	15	11
5999-00-057-2929	4	3
3040-00-150-7127	9	5

STOCK NUMBER	FIG.	ITEM
4730-00-057-5555	20	13
5305-00-057-7165	39	21
5305-00-059-4568	41	35
2640-00-060-3550	23	4
5310-00-067-6356	25	6
5305-00-068-0502	35	16
	41	19
5305-00-068-0511	36	4
5305-00-068-0512	40	33
5306-00-068-0514	35	15
5305-00-068-0515	9	27
5310-00-068-5285	26	25
4730-00-069-1186	19	8
	19	16
	19	16
4730-00-069-1187	18	6
	19	8
	20	15
5305-00-071-2066	26	22
5305-00-071-2069	36	1
5305-00-071-2241	26	19
5305-00-071-2505	30	11
3040-00-074-2357	9	5
9905-00-078-3720	46	3
9905-00-078-3721	46	3
5310-00-080-6004	11	11
	21	20
	34	16
	34	21
5310-00-081-4219	7	3
3110-00-087-3930	22	14
5310-00-087-7493	42	2
3110-00-087-9881	22	6
5330-00-090-2128	19	1
	19	1
5975-00-100-8766	35	10
5305-00-115-9526	1	1
	12	8
	17	4
	36	3
4730-00-137-9218	31	1
2530-00-137-9235	19	5
	19	5
5305-00-138-0069	45	4
5315-00-140-1938	41	11
2910-00-141-9758	43	8
4820-00-142-2099	31	25
4730-00-142-3076	16	13
4710-00-143-9053	31	22

CROSS–REFERENCE INDEXES

NATIONAL STOCK NUMBER INDEX

STOCK NUMBER	FIG.	ITEM
5310-00-151-89992	22	11
6145-00-152-6499	4	6
2530-00-159-8755	9	20
2530-00-159-8756	9	20
5310-00-167-0721	9	10
	38	11
8305-00-170-5812	BULK	1
5306-00-174-4246	26	24
5306-00-174-4311	28	8
5340-00-177-3957	41	10
5340-00-177-4039	16	18
5340-00-177-8056	25	7
5340-00-177-9014	34	3
5340-00-177-9295	17	3
6220-00-179-4324	3	2
4730-00-196-1470	31	6
4730-00-196-1505	20	11
3110-00-198-1050	27	16
4710-00-200-0284	14	10
9905-00-202-3639	45	1
4720-00-203-9658	13	15
	14	1
2530-00-204-4800	12	16
2540-00-205-0603	44	1
9905-00-205-2795	45	1
5360-00-205-4655	7	13
	8	14
5306-00-206-1560	21	17
5305-00-206-3518	22	13
5306-00-206-6339	22	9
5306-00-206-6340	22	9
5310-00-209-0965	13	20
	14	8
	17	21
5310-00-209-1761	12	11
	17	6
4730-00-221-2136	19	26
5310-00-225-6409	30	5
5310-00-225-6993	36	8
	41	12
5306-00-225-8496	10	2
	38	10
	38	19
	41	15
5306-00-225-8498	42	4
5306-00-225-9084	2	8
5306-00-225-9086	16	5
5306-00-225-9089	7	8
5305-00-225-9092	40	29
5306-00-225-9093	26	18
5306-00-226-4822	41	5
5306-00-226-4828	35	4
5306-00-226-4834	42	1
5306-00-226-7767	29	1
5940-00-230-0515	5	6
	5	6
2540-00-231-0200	40	28
5340-00-231-7428	39	13
	41	39
2510-00-231-7444	40	35
5315-00-234-1664	24	3
4730-00-246-9205	31	16
5325-00-249-6352	4	15
5310-00-261-7340	12	7
2610-00-262-8677	23	1
5310-00-265-9237	11	22
5305-00-267-8950	40	11
5305-00-267-8953	15	4
	31	17
5305-00-269-2803	7	15
	18	2
	25	5
5305-00-269-2804	9	23
5305-00-269-2808	9	19
5305-00-269-3234	34	31
5305-00-269-3235	17	19
5305-00-269-3244	28	7
5310-00-269-6751	11	18
2610-00-269-7383	23	2
2530-00-274-4511	12	6
5365-00-274-4544	13	3
	14	3
5310-00-274-8715	21	4
5310-00-275-3683	9	7
5306-00-275-5700	22	23
5310-00-275-6635	12	13
	17	9
4730-00-277-8643	15	9
4730-00-278-5812	17	7
4730-00-278-8825	19	11
	19	11
	20	8
5340-00-281-1444	5	2
	19	4
5340-00-281-1446	5	3
	19	4
	19	7
	19	7
9905-00-282-7489	46	1
5340-00-282-7544	4	16

CROSS–REFERENCE INDEXES

NATIONAL STOCK NUMBER INDEX

STOCK NUMBER	FIG.	ITEM
5330-00-285-5123	19	24
2530-00-288-2986	22	19
4730-00-289-4937	13	14
2530-00-293-1752	22	22
2530-00-293-5139	18	1
4730-00-293-7108	20	7
5330-00-297-7106	1	7
	1	11
5310-00-314-0764	9	3
5310-00-314-0765	9	2
5306-00-316-1023	11	8
4720-00-318-1016	19	2
	19	2
5310-00-322-7260	9	1
5315-00-322-7261	9	4
2530-00-323-8538	6	1
6150-00-330-3629	5	4
5306-00-335-4768	21	19
6220-00-337-6471	1	9
5360-00-347-6712	27	9
5310-00-368-4954	11	4
5306-00-383-4957	21	12
5340-00-389-0318	40	15
4730-00-396-2962	12	12
5940-00-399-6676	4	8
	4	8
	17	5
	22	10
5310-00-518-5566	21	2
2530-00-522-1157	10	8
5330-00-522-8544	39	12
	41	38
5306-00-523-7535	9	15
2510-00-535-6797	30	7
5340-00-537-2212	34	44
4710-00-541-6887	BULK	4
5310-00-543-5101	18	3
	28	13
4730-00-546-5898	34	25
5310-00-550-1130	37	2
4710-00-566-7133	13	7
	8	13
4710-00-566-7134	13	5
2510-00-571-6968	30	19
5935-00-572-9180	4	5
5305-00-416-6297	42	9
4730-00-419-9425	13	2
	13	18
	14	4
5340-00-420-4988	34	39
5305-00-421-3986	35	17
5310-00-427-0043	28	3
5305-00-432-4170	39	20
	46	2
5305-00-432-4172	37	6
	40	22
	41	25
5305-00-432-4201	16	17
6220-00-433-5966	2	6
3040-00-441-0210	7	12
9320-00-451-8080	BULK	3
5330-00-462-0907	3	3
4730-00-463-1588	13	12
	14	9
5340-00-466-1978	40	7
5340-00-472-1942	34	47
5310-00-475-1299	9	14
5310-00-483-8792	26	13
5310-00-488-3889	39	2
2590-00-491-6856	27	1
6220-00-500-0437	1	4
	1	13
4730-00-511-1677	16	12
4710-00-511-1692	12	1
	15	1
5310-00-516-0337	11	16
4730-00-516-7419	12	9
	5	9
	5	9
5310-00-407-9566	2	7
	7	10
	8	5
	10	1
	16	4
	20	3
	38	15
	39	5
	40	18
	41	16
	42	7
2530-00-408-9177	7	9
5330-00-415-1488	39	14
	41	40
5340-00-574-8356	18	5
5330-00-575-9791	34	46
4730-00-580-8457	19	25
5310-00-582-5965	9	26
	10	4
	15	6
	19	18

CROSS–REFERENCE INDEXES

NATIONAL STOCK NUMBER INDEX

STOCK NUMBER	FIG.	ITEM
5310-00-582-5965	19	18
	30	12
	35	13
	40	10
	41	20
	45	3
5310-00-584-5272	17	17
	22	12
	26	23
	29	3
	30	20
5310-00-584-7888	11	21
2510-00-590-9734	30	1
5310-00-595-7237	36	5
5315-00-597-6079	11	10
5330-00-599-4230	22	4
2590-00-611-7107	31	11
5340-00-611-7883	4	18
	14	6
5310-00-732-0558	36	6
2590-00-611-7884	4	18
5330-00-614-4356	21	6
2530-00-614-4454	21	5
5310-00-627-6128	9	18
4710-00-630-9928	13	5
9905-00-634-1765	46	3
9905-00-634-5271	46	3
9905-00-634-5350	46	3
9905-00-634-5351	46	1
5310-00-637-9541	1	2
	3	8
	7	16
	17	2
	25	3
	34	3
5310-00-641-9939	9	25
5310-00-660-3381	26	16
6220-00-669-5623	1	3
	1	3
2530-00-677-0202	21	11
5330-00-678-9047	2	4
5340-00-679-1492	41	14
5935-00-679-1519	35	2
5310-00-679-3606	19	22
5310-00-682-5631	35	18
1440-00-689-6160	12	15
2530-00-693-0736	26	3
5340-00-693-0739	7	6
2510-00-693-0741	30	10
4010-00-693-0743	30	16
2540-00-693-0744	30	24
2530-00-693-1007	9	6
2530-00-693-1010	21	9
2530-00-696-0351	KITS	
4010-00-696-2971	7	12
5360-00-699-8489	26	4
5360-00-699-9018	10	6
2510-00-703-9760	34	6
6145-00-705-6678	BULK	5
5360-00-706-1304	11	3
5360-00-706-9054	19	23
5305-00-709-8516	17	20
5305-00-709-8523	13	11
5305-00-719-5219	29	7
	30	8
	30	22
5305-00-726-2553	34	45
4730-00-729-6437	13	4
	4	18
5310-00-732-0559	7	7
	8	6
	9	17
	17	1
	18	4
	22	16
	25	2
	28	12
	34	33
5310-00-732-0560	17	18
	29	4
	30	21
5306-00-733-9239	21	12
2510-00-736-8628	28	9
2530-00-737-3260	12	4
	12	10
5330-00-737-3354	15	3
2530-00-738-9061	21	1
	22	1
2530-00-741-1005	6	1
5340-00-741-1006	11	5
2530-00-741-1007	8	2
5340-00-741-1008	8	7
5340-00-741-1011	8	10
2530-00-741-1012	8	10
2530-00-741-1014	11	1
5360-00-741-1017	11	7
4010-00-741-1027	24	5
5310-00-741-1028	24	4
2510-00-741-1042	28	10

CROSS–REFERENCE INDEXES

NATIONAL STOCK NUMBER INDEX

STOCK NUMBER	FIG.	ITEM
2530-00-741-1077	13	16
2940-00-741-1081	19	21
5310-00-741-1378	21	8
	21	8
5310-00-741-1379	21	7
2530-00-741-1425	21	15
5330-00-741-1429	21	14
5365-00-741-1433	21	18
5306-000-741-1760	9	16
4730-00-741-1503	13	6
4710-00-741-1907	13	7
2530-00-741-2050	10	7
2530-00-741-2065	12	5
2530-00-741-2068	10	7
5310-00-741-2088	13	1
	14	5
5365-00-741-2103	9	24
3020-00-741-2104	9	11
5315-00-741-2106	10	9
5305-00-741-2108	9	29
5310-00-741-2120	9	12
5306-00-741-2228	34	28
2510-00-741-2233	34	4
2510-00-741-2234	34	14
4510-00-741-2237	32	2
4510-00-741-2238	32	1
5330-00-741-2242	34	12
5340-00-741-2247	34	7
4730-00-741-2249	34	5
5310-00-741-2276	34	13
5315-00-741-2282	34	27
4010-00-741-2255	34	10
2530-00-741-3231	21	16
2530-00-741-5748	19	20
5306-00-752-1631	22	21
5310-00-752-1633	22	5
3040-00-752-1655	22	7
5340-00-752-1667	22	18
5310-00-752-1711	11	17
2510-00-752-1826	28	4
2510-00-752-1841	28	5
9905-00-752-4649	4	10
	4	10
	5	5
	5	5
6220-00-752-6018	1	10
6220-00-752-6020	1	8
5315-00-754-0848	8	8
5310-00-761-6882	10	5
	19	17
5310-00-761-68882	35	14
	37	1
	41	33
	45	2
5310-00-763-8901	27	13
5310-00-763-8920	24	7
5305-00-764-0070	2	2
5340-00-766-3330	42	3
5340-00-766-6336	40	36
5310-00-768-0319	15	5
	31	19
	35	20
	40	16
	45	2
5310-00-770-8275	35	19
2530-00-770-9149	9	21
2530-00-770-9150	9	22
9905-00-770-9155	46	3
5360-00-770-9156	16	10
5360-00-771-6972	16	23
2530-00-772-5274	17	13
4730-00-773-2163	12	18
	15	2
6220-00-775-2384	2	3
5935-00-776-0599	4	2
	4	2
3020-00-790-2289	27	3
5315-00-790-2290	27	7
3040-00-790-2291	27	8
2590-00-790-2292	27	11
5340-00-790-2293	27	14
2590-00-790-2294	27	2
2530-00-791-3259	9	13
5120-00-795-0946	47	1
2530-00-797-9295	19	19
	19	19
5306-00-797-9296	19	27
	19	27
4720-00-805-0526	16	24
4730-00-805-0677	16	7
4730-00-805-0678	16	25
5340-00-809-1492	19	12
	19	12
	20	9
4720-00-809-2750	12	3
	15	14
5310-00-809-3079	39	3
	41	13
5310-00-809-4058	15	8
	30	13

CROSS–REFERENCE INDEXES

NATIONAL STOCK NUMBER INDEX

STOCK NUMBER	FIG.	ITEM
5310-00-809-4058	35	25
5310-00-809-5998	17	16
	34	30
2640-00-810-5861	23	3
9905-00-813-2314	46	3
9905-00-815-7673	46	3
9905-00-815-7674	46	3
9905-00-815-7675	46	3
5315-00-816-5491	27	17
5305-00-819-7024	43	3
5365-00-819-7025	27	4
5310-00-820-6653	24	6
6150-00-830-6663	5	4
9905-00-831-6271	46	1
5310-00-832-9719	21	13
5935-00-833-8561	4	9
	4	9
	5	7
	5	7
5970-00-833-8562	4	7
	4	7
	5	8
	5	8
5310-00-833-8567	4	4
5315-00-833-8567	40	8
5315-00-839-5822	25	11
	41	6
5310-00-842-1488	11	12
5315-00-842-3044	7	2
	11	13
	34	11
	34	15
	34	24
5315-00-844-5836	26	12
6220-00-846-9745	2	1
4820-00-849-1220	20	12
5310-00-853-9335	9	9
5305-00-855-0956	4	11
	5	1
	19	3
	20	10
5305-00-855-0960	41	41
5305-00-855-0964	4	13
5305-00-855-0965	41	32
5310-00-877-5797	26	10
5305-00-879-7941	40	31
	45	4
5310-00-880-7744	38	16
	41	36
	42	8
5310-00-880-7745	13	19
	14	7
5310-00-880-7746	7	11
	16	3
	20	2
	39	4
	40	17
4730-00-883-2620	34	43
5310-00-885-7734	43	10
5360-00-886-8064	25	12
2590-00-886-8066	25	9
5310-00-889-2606	34	20
	36	7
5330-00-891-7826	22	15
5310-00-903-3993	9	8
5315-00-904-2800	25	10
4730-00-906-7922	16	15
	19	10
	19	10
4730-00-908-3193	15	15
4730-00-908-3194	12	2
	16	8
	16	22
	17	11
4730-00-909-8627	34	35
5310-00-923-1925	7	5
4610-00-924-0315	40	21
5310-00-924-4218	9	30
5330-00-930-5292	13	13
2530-00-930-8232	16	2
5310-00-934-9751	36	14
	40	12
	41	4
	42	12
5310-00-934-9754	41	44
5310-00-934-9755	43	9
5310-00-934-9757	41	17
5310-00-934-9758	39	7
	40	20
	41	21
5306-00-937-2321	34	23
5305-00-947-4364	25	13
5925-00-952-8641	35	23
5305-00-958-4353	40	38
5305-00-958-4357	41	46
5305-00-958-5471	39	10
5305-00-958-8473	30	2
5305-00-959-4159	38	6
	38	17
	40	1

CROSS–REFERENCE INDEXES

NATIONAL STOCK NUMBER INDEX

STOCK NUMBER	FIG.	ITEM
5305-00-959-4159	41	1
5310-00-982-4908	21	21
5310-00-982-6810	26	2
5305-00-984-6207	35	22
5305-000-984-6212	40	26
	41	30
5305-00-984-7356	43	11
2530-00-587-2565	10	3
5305-00-588-1723	21	4
	45	4
5305-00-588-1727	37	4
	38	2
5305-00-989-7435	26	21
5305-00-990-6444	36	11
	40	14
	41	43
2530-00-991-4342	10	3
5305-00-993-2738	45	4
2540-00-999-5584	24	1
9905-00-999-7369	46	5
9905-00-999-7370	46	6
4720-01-014-4915	BULK	2
2590-01-026-4179	25	1
2530-01-042-0683	20	5
5306-01-043-5702	20	4
5340-01-046-8106	30	14
9905-01-061-4282	46	3
2510-01-067-4717	3	6
4730-01-079-8821	16	14
	19	9
	19	9
	20	6
2530-01-083-5641	9	13
5360-01-090-4540	27	15
6220-01-093-4439	3	1
4720-01-095-0515	31	10
	34	36
2590-01-137-3371	27	10
4730-01-139-9798	16	11
5305-01-140-9118	3	9
5365-01-158-6311	34	42
4930-01-162-3855	34	2
5315-01-064-6493	30	18
2590-01-183-6816	26	1
4510-01-193-4080	33	1
2510-01-194-9890	28	1
5340-01-209-0475	26	14
3040-01-209-0497	26	20
5340-01-209-0500	26	17
5340-01-209-0503	26	15

STOCK NUMBER	FIG.	ITEM
9905-01-210-0232	46	3
2590-01-210-8843	26	26
2540-01-215-1617	26	6
2530-01-215-3389	26	11
5340-01-218-4491	29	2
2510-01-218-4526	29	6
5340-01-222-5247	26	8
4710-01-222-9738	13	16
	14	2
2510-01-237-2413	30	23
3040-01-247-2215	25	4
2530-01-247-7966	11	9
4730-01-254-1253	31	23
5340-01-275-1219	40	9
5340-01-276-5096	5	10
2530-01-276-5735	7	4
4720-01-277-7555	16	6
5970-01-282-1853	31	14
4730-01-293-6888	31	21
2540-01-325-1863	44	1
2640-00-050-1235	23	7
2640-00-555-2829	23	6
2610-01-063-7947	23	5

CROSS–REFERENCE INDEXES

PART NUMBER INDEX

CAGEC	PART NUMBER	STOCK NUMBER	FIG.	ITEM
00141	AK6	3110-00-198-1050	27	16
02686	129374		21	1
02686	129378		21	2
81346	ASTM A53		31	24
78500	A1-3216S981	2530-00-741-1005	6	1
78500	A1-3236M1261	2530-00-791-3259	9	13
81996	A2303-12-51PC18	4730-00-246-9205	31	16
23705	A298264	5340-00-741-1011	8	10
23705	A298265	2530-00-741-1012	8	10
23075	A298320	2530-00-293-5139	18	1
23705	A298322	4710-00-511-1692	15	1
23705	A298531	2530-00-741-1014	11	1
23705	A298537	2530-00-741-1007	8	2
23705	A298749	2530-00-797-9295	19	19
			19	19
78500	A333E785	3040-00-752-1655	22	7
81348	CCC-C-419	8305-00-170-5812	BULK	1
19207	CPR102321-1	4730-01-079-8821	16	14
			19	9
			19	9
			20	6
40342	C479	2530-00-772-5274	17	13
19207	C7412237	4510-00-741-2237	32	2
63477	FC3354	4730-00-396-2962	12	12
63477	FC4819	4730-00-278-5812	17	7
06542	FED-STD 156	5975-00-100-8766	35	10
81348	GROUP2/9.00-20/T R175A/CN CENTER	2610-00-269-7383	23	2
81718	H2525M	5310-00-637-9541	1	2
			25	3
			34	34
81349	MIL-T-3520	4710-00-541-6887	BULK	4
96906	MS15001-1	4730-00-050-4203	28	6
96906	MS15003-1	4730-00-050-4208	25	8
96906	MS15570-1251	6240-00-019-0877	1	6
			2	5
			3	7
96906	MS15570-623	6240-00-019-3093	3	5
96906	MS16556-844		26	5
96906	MS16562-65	5315-00-844-5836	26	12
96906	MS17829-4C	5310-00-483-8792	26	13
96906	MS17829-4C	5305-00-115-9526	1	1
			12	8
			17	4
			36	3
96906	MS19081-230		21	10
96906	MS2C392-7027	5315-00-904-2800	25	10
96906	MS20913-1S	4730-00-221-2136	19	26
96906	MS21044-N12	5310-00-982-6810	26	2
96906	MS21044-N3	5310-00-877-5797	26	10
96906	MS21044-N9		26	27
96906	MS21045-6	5310-00-982-4908	21	22
96906	MS21083-N5	5310-00-660-3381	26	16

CROSS–REFERENCE INDEXES

PART NUMBER INDEX

CAGEC	PART NUMBER	STOCK NUMBER	FIG.	ITEM
96906	MS21333-100	5340-00-809-1492	19	12
			19	12
			20	9
96906	MS21333-3	5340-00-057-2890	15	11
96906	MS21333-35	5340-00-282-7544	4	16
96906	MS21333-7	5340-00-177-4039	16	18
96906	MS24615-25	5305-00-057-7165	39	21
96906	MS24617-31	5305-00-879-7941	40	31
			45	4
96906	MS24617-53	5305-00-959-4159	38	6
			38	17
			40	1
			41	1
96906	MS24629-36	5305-00-855-0960	41	41
96906	MS24629-38	5305-00-855-0965	41	32
96906	MS24629-47	5305-00-855-0956	4	11
			5	1
			19	3
			20	10
96906	MS24629-48	5305-00-855-0964	4	13
96906	MS24629-57	5305-00-052-6921	40	4
			41	24
96906	MS24629-58	5305-00-052-6922	16	28
			35	24
96906	MS24649-27		19	13
96906	MS24649-35		39	15
96906	MS24665-134	5315-00-839-5820	40	8
96906	MS24665-283	5315-00-842-3044	7	2
			11	13
			34	11
			34	15
			34	24
96906	MS24665-353	5315-00-839-5822	25	11
			41	6
96906	MS24665-493	5315-00-018-7988	30	17
			34	29
96906	MS24665-495	5315-00-234-1664	24	3
96906	MS24665-497	5315-00-013-7258	34	8
96906	MS24665-154	5940-00-230-0515	5	6
			5	6
96906	MS27148-2	5999-00-057-2929	4	3
96906	MS27183-10	5310-00-809-4058	15	8
			30	13
			35	25
96906	MS27183-12	5310-00-081-4219	7	3
96906	MS27183-13	5310-00-087-7493	42	2
96906	MS27183-14	5310-00-080-6004	11	11
			21	20
			34	16
			34	21
96906	MS27183-18	5310-00-809-5998	17	16

CROSS–REFERENCE INDEXES

PART NUMBER INDEX

CAGEC	PART NUMBER	STOCK NUMBER	FIG.	ITEM
96906	MS27183-18	5310-00-809-5998	34	30
96906	MS27183-19	5310-00-809-3079	39	3
			41	13
96906	MS27183-20	5310-00-068-5285	26	25
96906	MS27183-42	5310-00-014-5850	26	9
96906	MS28932C01-03		11	19
96906	MS35140-11		16	29
96906	MS35140-13		16	26
96906	MS35140-14		16	30
96906	MS35140-15		16	27
96906	MS35190-253	5305-00-059-4568	41	35
96906	MS35190-273	5305-00-958-5471	39	10
96906	MS35191-239	5305-00-984-7356	43	11
96906	MS35206-260	5305-00-984-6207	35	22
96906	MS35206-265	5305-00-984-6212	40	26
			41	30
96906	MS35206-279	5305-00-988-1723	21	3
			45	4
96906	MS35206-283	5305-00-988-1727	37	4
			38	2
96906	MS35207-229	5305-00-958-4353	40	38
96906	MS35207-242	5305-00-958-4357	41	46
96906	MS35207-261	5305-00-990-6444	36	11
			40	14
			41	43
96906	MS35207-264	5305-00-989-7435	26	21
96906	MS35207-280	5305-00-993-2738	45	4
96906	MS35226-64	5305-00-416-6297	42	9
96906	MS35291-41	5306-00-226-4834	42	1
96906	MS35292-34		8	11
96906	MS35333-40	5310-00-550-1130	37	2
96906	MS35333-41	5310-00-167-0721	9	10
			38	11
96906	MS35333-42	5310-00-595-7237	36	5
96906	MS35335-35	5310-00-627-6128	9	18
96906	MS35335-40	5310-00-275-3683	9	7
96906	MS35337-26		42	5
96906	MS35338-025		31	20
96906	MS35338-27	5310-00-543-5101	18	3
			28	13
96906	MS35338-43	5310-00-045-3296	36	13
			39	8
			40	13
			41	3
			42	13
96906	MS35338-44	5310-00-582-5965	9	26
			10	4
			15	6
			19	18
			19	18
			30	12

CROSS–REFERENCE INDEXES

PART NUMBER INDEX

CAGEC	PART NUMBER	STOCK NUMBER	FIG.	ITEM
96906	MS35338-44	5310-00-582-5965	35	13
			40	10
			41	20
			45	3
96906	MS35338-45	5310-00-407-9566	2	7
			7	10
			8	5
			10	1
			16	4
			20	3
			38	15
			39	5
			40	18
			41	16
			42	7
96906	MS35338-46	5310-00-637-9541	3	8
			7	16
			17	2
			22	17
96906	MS35338-47	5310-00-209-0965	13	20
			14	8
			17	21
96906	MS35338-48	5310-00-584-5272	17	17
			22	12
			26	23
			29	3
			30	20
96906	MS35338-50	5310-00-820-6653	24	6
96906	MS35338-51	5310-00-584-7888	11	21
96906	MS35338-63	5310-00-274-8715	21	4
96906	MS35338-8	5310-00-261-7340	12	7
96906	MS35387-1	9905-00-205-2795	45	1
96906	MS35387-2	9905-00-202-3639	45	1
96906	MS35425-42	5310-00-889-2606	34	20
			36	7
96906	MS35478-1683	6240-00-044-6914	1	5
			1	12
			3	4
96906	MS35489-72	5325-00-249-6352	4	15
96906	MS35645-1	2910-00-141-9758	43	8
96906	MS35649-202	5310-00-934-9758	39	7
			40	20
			41	21
96906	MS35649-282	5310-00-934-9757	41	17
96906	MS35650-302	5310-00-934-9751	36	14
			40	12
			41	4
			42	12
96906	MS35650-362	5310-00-934-9755	43	9
96906	MS35650-382	5310-00-934-9754	41	44
96906	MS35690-1224	5310-00-265-9237	11	22

CROSS–REFERENCE INDEXES

PART NUMBER INDEX

CAGEC	PART NUMBER	STOCK NUMBER	FIG.	ITEM
96906	MS35690-45		19	17
96906	MS35690-525		8	9
96906	MS35691-13	5310-00-853-9335	9	9
96906	MS35692-21	5310-00-842-1488	11	12
96906	MS35751-19	5306-00-027-0722	40	34
96906	MS35782-5	4820-00-849-1220	20	12
96906	MS35810-3	5315-00-754-0848	8	8
96906	MS35810-6	5315-00-140-1938	41	11
96906	MS35812-11	5340-00-177-3957	41	10
96906	MS35842-11	4730-00-908-3194	12	2
			16	8
			16	22
			17	11
96906	MS35842-12	4730-00-908-3193	15	15
96906	MS35842-13	4730-00-909-8627	34	35
96906	MS39020-1	9905-00-752-4649	4	10
			4	10
			5	5
			5	5
96906	MS39136-18	4730-00-906-7922	16	15
			19	10
			19	10
96906	MS39179-5	4730-00-069-1186	19	8
96906	MS39231-7	4730-00-137-9218	31	1
96906	MS45905-S6	5310-00-923-1925	7	5
96906	MS49005-6	4730-00-057-5555	20	13
96906	MS51302-1	6220-00-846-9745	2	1
96906	MS51329-1	6220-00-669-5623	1	3
			1	3
96906	MS51330-1	6220-00-337-6471	1	9
96906	MS51339-3	2540-00-999-5584	24	1
96906	MS51377-1	2640-00-810-5861	23	3
96906	MS51813-10	4730-01-293-6888	31	21
96906	MS51846-118		31	13
96906	MS51861-35	5305-00-432-4170	39	20
			46	2
96906	MS51861-37	5305-00-432-4172	37	6
			40	22
			41	25
96906	MS51861-44	5305-00-138-0069	45	4
96906	MS51861-45	5305-00-432-4201	16	17
96906	MS51861-51		15	10
96906	MS51874-4	4730-00-013-7397	13	10
96906	MS51922-33	5310-00-225-6993	36	8
			41	12
96906	MS51922-57	5310-00-067-6356	25	6
96906	MS51922-61	5310-00-832-9719	21	13
96906	MS51922-68	5310-00-225-6409	30	5
96906	MS51943-39	5310-00-488-3889	39	2
96906	MS51946-1	5306-00-733-9239	21	12
96906	MS51946-11	5306-00-206-1560	21	17

CROSS–REFERENCE INDEXES

PART NUMBER INDEX

CAGEC	PART NUMBER	STOCK NUMBER	FIG.	ITEM
96906	MS51946-2	5306-00-383-4957	21	12
96906	MS51946-3	5306-00-206-6339	22	9
96906	MS51946-4	5306-00-206-6340	22	9
96906	MS51953-101	4730-00-196-1505	20	11
96906	MS51953-145	4730-00-196-1470	31	6
96906	MS51959-46	5305-00-764-0070	2	2
96906	MS51967-2	5310-00-761-6882	10	5
			19	17
			35	14
			37	1
			41	33
			45	2
96906	MS51967-20	5310-00-763-8920	24	7
96906	MS51967-5	5310-00-880-7744	38	16
			41	36
			42	8
96906	MS51967-8	5310-00-732-0558	36	6
96906	MS51968-11	5310-00-880-7745	13	19
			14	7
96906	MS51968-14	5310-00-732-0560	17	18
			29	4
			30	21
96906	MS51968-2	5310-00-768-0319	15	5
			31	19
			35	20
			40	16
			45	2
96906	MS51968-23	5310-00-763-8901	27	13
96906	MS51968-5	5310-00-880-7746	7	11
			16	3
			20	2
			39	4
			40	17
96906	MS51968-8	5310-00-732-0559	7	7
			8	6
			9	17
			17	1
			18	4
			22	16
			25	2
			28	12
			34	33
96906	MS51970-1	5310-00-924-4218	9	30
96906	MS51970-4	5310-00-903-3993	9	8
96906	MS51983-1	5310-00-518-5566	21	2
02686	124378		22	10
96906	MS51983-2	5310-00-594-8038	21	2
			22	10
96906	MS52125-2	6220-01-093-4439	3	1
96906	MS521301A204120	4720-00-809-2750	12	3
			15	14

CROSS–REFERENCE INDEXES

PART NUMBER INDEX

CAGEC	PART NUMBER	STOCK NUMBER	FIG.	ITEM
96906	MS53004-2	2530-00-021-2366	20	1
96906	MS53007-1	9905-00-999-7370	46	6
96906	MS53007-2	9905-00-999-7369	46	5
			22	2
02686	128975		22	1
96906	MS53047-1	6220-00-500-0437	1	4
			1	13
96906	MS90523-1Y3		31	7
96906	MS90725-10	5305-00-071-2241	26	19
96906	MS90725-31	5306-00-225-8496	10	2
			38	10
			38	19
			41	15
96906	MS90725-33	5306-00-225-8498	42	4
96906	MS90725-6	5305-00-068-0502	35	16
			41	19
96906	MS90726-109	5305-00-226-7767	29	1
96906	MS90726-232	5305-00-958-8473	30	2
96906	MS90726-29	5306-00-225-9084	2	8
96906	MS90726-31	5306-00-225-9086	16	5
96906	MS90726-34	5306-00-225-9089	7	8
96906	MS90726-37	5305-00-225-9092	40	29
96906	MS90726-38	5306-00-225-9093	26	18
96906	MS90726-60	5305-00-269-2803	7	15
			18	2
			25	5
96906	MS90726-61	5305-00-269-2804	9	23
96906	MS90726-65	5305-00-269-2808	9	19
96906	MS90727-1	5305-00-267-8950	40	11
96906	MS90727-111	5305-00-719-5219	29	7
			30	8
			30	22
96906	MS90727-166	5305-00-726-2553	34	45
96906	MS90727-35	5306-00-051-4077	39	16
			40	30
96906	MS90727-4	5305-00-068-0512	40	33
96906	MS90727-5	5305-00-267-8953	15	4
			31	17
96906	MS90727-58	5305-00-269-3234	34	31
96906	MS90727-59	5305-00-269-3235	17	19
96906	MS90727-68	5305-00-269-3244	28	7
96906	MS90727-7	5306-00-068-0514	35	15
96906	MS90727-8	5305-00-068-0515	9	27
96906	MS90727-86	5305-00-709-8516	17	20
96906	MS90727-87	5305-00-709-8523	13	11
96906	MS90728-109	5305-00-071-2066	26	22
96906	MS90728-113	5305-00-071-2069	36	1
96906	MS90728-201	5305-00-947-4364	25	13
96906	MS90728-29	5306-00-226-4822	41	5

CROSS-REFERENCE INDEXES

PART NUMBER INDEX

CAGEC	PART NUMBER	STOCK NUMBER	FIG.	ITEM
96906	MS90728-35	5306-00-226-4828	35	4
96906	MS90728-59	5305-01-140-9118	3	9
96906	MS90728-62	5305-00-068-0511	36	4
96906	MS90728-7	5305-00-071-2505	30	11
81349	M13486-1-5	6145-00-152-6499	4	6
81349	M13486-1-7	6145-00-705-6678	BULK	5
81349	M3520-A10C02B		13	9
81349	M3520-A40C04B	4710-00-200-0284	14	10
81349	M3520-B70C2G		13	9
91340	M4X5C9	5330-00-285-5123	19	24
40342	N-12970-A	2530-00-741-5748	19	20
23705	N12971	2940-00-741-1081	19	21
40342	N12972	5310-00-679-3606	19	22
52737	P120	5925-00-952-8641	35	23
40342	RN13A	2530-00-696-0351	KITS	
12603	SA20160	2530-00-323-8538	6	1
01475	SW5C0-43	6150-00-330-3629	5	4
21530	S384	4730-00-546-5898	34	25
15434	S962	4730-00-044-4715	31	3
51665	US48	2640-00-060-3550	23	4
90129	X8110-3	5935-00-770-8275	35	19
81348	ZZ-T-381M/GROUP3 /9.C0-20/D/TBCC	2610-00-262-8677	23	1
19207	104420-2-1		19	14
19207	104420-2-2		19	14
19207	104420-2-3		20	14
90598	10517-2		31	5
19207	108629		8	12
19207	10871578	5340-01-275-1219	40	9
19207	10884699		46	4
19207	10885200	2590-00-491-6856	27	1
19207	10885201		27	6
19207	10885202		27	5
19207	10885203	2590-00-790-2294	27	2
19207	10885207		40	2
19207	10885208		40	5
19207	10885211		40	19
			41	22
19207	10885218		41	45
19207	10885219		40	23
			41	27
19207	10885220		40	25
			41	29
19207	10885221		41	2
19207	10885225		40	3
			41	23
19207	10885227		40	24
			41	28
19207	10885228		41	9
19207	10885229		41	18
19207	10885231		41	47

CROSS-REFERENCE INDEXES

PART NUMBER INDEX

CAGEC	PART NUMBER	STOCK NUMBER	FIG.	ITEM
19207	10885237		41	34
19207	10885238		38	1
19207	10885239		38	1
19207	10885244		38	7
19207	10885282		41	31
19207	10885292		38	3
19207	10885293		38	7
19207	10885296		38	9
19207	10885321		42	11
19207	10885340		39	1
19207	10885346		39	17
19207	10885347		39	18
19207	10885350		36	10
19207	10885351		36	9
19207	10885353		36	2
19207	10885354		37	8
19207	10885355		37	3
19207	10885356		39	6
19207	10885357		37	5
			39	19
19207	10885360		38	18
19207	10885375		35	11
19207	10885377		35	12
19207	10885378	9905-00-813-2314	46	3
19207	10885381		42	10
19207	10885388		38	9
19207	10885392		43	1
19207	10885393		43	6
19207	10885396		43	7
19207	10885397		43	5
19207	10885398		43	2
19207	10885399		43	4
19207	10885400	5305-00-819-7024	43	3
19207	10896684	5330-00-891-7826	22	15
19207	10896696	2530-00-288-2986	22	19
19207	10900796		39	11
19207	10900797		41	37
19207	10922097		41	7
19207	10922107		35	7
19207	10922108		35	9
19207	10923514		36	12
			40	37
			41	42
19207	10929947		38	14
19207	10929955-1		40	27
19207	10944734	4730-01-254-1253	31	23
19207	10945151	3110-00-087-3930	22	14
19207	10948079	3110-00-087-9881	22	6
19207	11625104	2530-01-042-0683	20	5
19207	11625105	5306-01-043-5702	20	4
19207	11639519-2	5330-00-462-0907	3	3

CROSS–REFERENCE INDEXES

PART NUMBER INDEX

CAGEC	PART NUMBER	STOCK NUMBER	FIG.	ITEM
19207	11639520	2510-01-067-4717	3	6
19207	11639535	6220-00-179-4324	3	2
19207	11652179	2530-00-036-0297	7	1
19207	11652182	2590-00-004-6841	4	1
12204	120426	5305-00-206-3518	22	13
12204	120526		8	3
12204	120741	5306-00-012-0741	11	6
19207	12204		8	4
19207	12259830	2590-01-183-6816	26	1
19207	12259830-1		26	7
19207	12259831	3040-01-209-0497	26	20
19207	12259835	5340-01-209-0475	26	14
19207	12259837	5340-01-209-0500	26	17
19207	12259839	2590-01-210-8843	26	26
19207	12259840	5340-01-209-0503	26	15
19207	12259844	2540-01-215-1617	26	6
19207	12259845	2530-01-215-3389	26	11
19207	12301170	2530-01-247-7966	11	9
19207	12312996	5340-01-222-5247	26	8
19207	12331770	9905-01-210-0232	46	3
19207	12354281		31	12
19207	12355591		46	3
19207	12355807	2510-01-237-2413	30	23
19207	12355943-1		19	28
19207	12355943-2		19	28
19207	12355971		46	8
78500	1259-4-182	5315-00-741-2106	10	9
30379	143342	4730-00-277-8643	15	9
19207	144897		38	5
19207	145207		19	6
94222	17-10015-13	5310-00-885-7734	43	10
19207	1705812-1		30	15
19207	178434		35	21
56442	20328	2510-00-752-1826	28	4
78550	200360	4730-00-278-8825	19	11
			19	11
			20	8
06853	200361	4730-00-293-7108	20	7
06853	213630	5330-00-090-2128	19	1
			19	1
04741	217709	4730-00-511-1677	16	12
24617	219679		31	4
24617	219695		31	2
06853	235091	4730-00-580-8457	19	25
06853	235093	5360-00-706-9054	19	23
71843	2392A	5340-00-679-1492	41	14
06853	246115	4720-01-014-4915	BULK	2
19207	277529-54		16	19
19207	2775529-60		16	16
86107	29-1	4510-00-741-2238	32	1
23705	298498	5340-00-040-2690	11	14

CROSS–REFERENCE INDEXES

PART NUMBER INDEX

CAGEC	PART NUMBER	STOCK NUMBER	FIG.	ITEM
23705	298499	5340-00-040-2691	11	14
23705	298506	5310-00-368-4954	11	4
23705	298517	2530-00-040-2693	11	15
23705	301638	5306-00-316-1023	11	8
23705	319271	4720-01-095-0515	31	10
			34	36
23705	321090	2540-00-040-2417	34	32
23705	325046		46	3
78500	3262H86	2530-00-026-0255	22	3
23040	33797S7		42	6
56442	348S32	2510-00-752-1941	28	5
81240	35P336	2530-00-991-4342	10	3
78500	372-Y-285	2530-00-040-2692	11	15
21450	441201		8	1
			46	7
21450	443866		31	15
24617	446284	5310-00-044-6284	24	2
19207	451027		34	48
19207	4518080-2		38	8
78500	54372E	2510-00-736-8628	28	9
19207	502921		31	9
19207	503388		30	9
19207	5156636	5330-00-930-5292	13	13
19207	5160323	5310-00-209-1761	12	11
			17	6
19207	5160337	5310-00-516-0337	11	16
19207	5160341		11	20
19207	5160345	5310-00-269-6751	11	18
19207	5167419	4730-00-516-7419	12	9
			17	5
79470	5167679	4730-00-463-1588	13	12
			14	9
19207	5214539	5310-00-275-6635	12	13
			17	9
19207	5298653	5365-00-274-4544	13	3
			14	3
19207	5303461	2530-00-408-9177	7	9
			8	13
19207	5323088	5310-00-641-9939	9	25
19220	5607-51	5340-00-466-1978	40	7
19220	57108	2540-00-040-2414	34	41
21450	582826	5330-00-522-8544	39	12
			41	38
73331	5942528	5330-00-678-9047	2	4
81343	6-4 120102BA	4730-00-069-1186	19	16
			19	16
81343	6-4 120202BA(LONG NUT)	4730-00-069-1187	18	6
			19	8
			20	15
19207	6144356	5330-00-614-4356	21	6

CROSS–REFERENCE INDEXES

PART NUMBER INDEX

CAGEC	PART NUMBER	STOCK NUMBER	FIG.	ITEM
19200	6144454	2530-00-614-4454	21	5
19207	7003071		38	4
19207	7018991		38	12
19207	7018992		38	13
19207	7039760	2510-00-703-9760	34	6
19207	7045149	5360-01-090-4540	27	15
19207	7045152	5360-00-347-6712	27	9
19207	7045791-2		35	6
19207	7056678-10		35	3
19207	7056678-10-1		35	8
19207	7061304	5360-00-706-1304	11	3
19207	7064978	2530-00-693-1007	9	6
19207	7084828	2540-00-231-0200	40	28
19207	70885237		39	9
09386	71423E	2530-00-693-1010	21	9
19207	7264634	5340-00-389-0381	40	15
19207	726735		40	6
19207	7320658	5330-00-297-7106	1	7
			1	11
19207	7335509		40	32
19207	7335511		35	5
19207	7335512		35	1
19207	7336058	5305-00-421-3986	35	17
79470	7350508		16	21
			17	12
19207	7373260	2530-00-737-3260	12	4
			12	10
19207	7373354		12	17
		5330-00-737-3354	15	3
19207	7411006	5340-00-741-1006	11	5
19207	7411008	5340-00-741-1008	8	7
19207	7411010	2530-00-274-4511	12	6
19207	7411017	5360-00-741-1017	11	7
19207	7411021	2530-00-137-9235	19	5
			19	5
19207	7411023	4720-00-203-9658	13	15
			14	1
19207	7411027	4010-00-741-1027	24	5
19207	7411028	5310-00-741-1028	24	4
19207	7411041	5310-00-427-0043	28	3
19207	7411042	2510-00-741-1042	28	10
19207	7411047	5315-01-164-6493	30	18
80212	7411076-1		13	8
19207	7411077	2530-00-741-1077	13	16
19207	7411378	5310-00-741-1378	21	8
			21	8
19207	7411379	5310-00-741-1379	21	7
19207	7411425	2530-00-741-1425	21	15
19207	7411429	5330-00-741-1429	21	14
19207	7411433	5365-00-741-1433	21	18
19207	7411760	5306-00-741-1760	9	16

CROSS–REFERENCE INDEXES

PART NUMBER INDEX

CAGEC	PART NUMBER	STOCK NUMBER	FIG.	ITEM
19207	7411903	4730-00-741-1903	13	6
19207	7412050	2530-00-741-2050	10	7
19207	7412065	2530-00-741-2065	12	5
19207	7412068	2530-00-741-20681	10	7
82646	7412079	4730-00-729-6437	13	4
			14	6
19207	7412088	5310-00-741-2088	13	1
			14	5
19207	7412103	5365-00-741-2103	9	24
19207	7412104	3020-00-741-2104	9	11
19207	7412108	5305-00-741-2108	9	29
19207	7412120	5310-00-741-2120	9	12
19207	7412228	5306-00-741-2228	34	28
19207	7412233	2510-00-741-2233	34	4
19207	7412234	2510-00-741-2234	34	14
19207	7412239	4510-00-193-4080	33	1
19207	7412242	5330-00-741-2242	34	12
19207	7412247	5340-00-741-2247	34	7
19207	7412249	4730-00-741-2249	34	5
19207	7412255	4820-00-142-2099	31	25
19207	7412276	5310-00-741-2276	34	13
19207	7412282	5315-00-741-2282	34	27
19207	7412283		34	9
19207	7412285		34	22
19207	7412286		34	17
			34	26
19207	7412295	4010-00-741-2295	34	10
19207	7413231	2530-00-741-3231	21	16
19207	7415746-1		7	14
19207	7521629	5306-00-275-5700	22	23
19207	7521631	5306-00-752-1631	22	21
19207	7521633	5310-00-752-1633	22	5
19207	7521650	5310-00-151-8992	22	11
19207	7521663	2530-00-026-0251	22	20
19207	7521664	2530-00-293-1752	22	22
19207	7521667	5340-00-752-1667	22	18
19207	7521711	5310-00-752-1711	11	17
19207	7521787	5330-00-599-4230	22	4
19207	7526018	6220-00-752-6018	1	10
19207	7526020	6220-00-752-6020	1	8
19207	7534653	4610-00-020-5375	37	7
		4610-00-924-0315	40	21
		4610-00-020-5375	41	26
19207	7534675	5340-00-790-2293	27	14
19207	7534577	2590-00-790-2292	27	11
19207	7534680	3020-00-790-2289	27	3
19207	7534682	3040-00-790-2291	27	8
19207	7534685	5365-00-819-7025	27	4
19207	7534686		27	12
19207	7534687	5315-00-790-2290	27	7
19207	7534690	5315-00-816-5491	27	17

CROSS-REFERENCE INDEXES

PART NUMBER INDEX

CAGEC	PART NUMBER	STOCK NUMBER	FIG.	ITEM
19207	7534654	2590-01-137-3371	27	10
19207	7535620	5340-00-766-6336	40	36
19207	7535643	5340-00-766-3330	42	3
19207	754653		39	22
19207	7745464	4730-00-419-9425	13	2
			13	18
			14	4
19207	7760599	5935-00-776-0599	4	2
			4	2
19207	7950946	5120-00-795-0946	47	1
19207	7973928		13	8
19207	7973930	4710-01-222-9738	13	16
			14	2
19207	7979250		4	14
19207	7979296	5306-00-797-9296	19	27
			19	27
19207	7979373	9905-00-282-7489	46	1
19207	7979525	2510-01-194-9890	28	1
19207	7979573		28	2
19207	7979574		28	11
19207	7979622		34	18
19207	7979633	4710-00-143-9053	31	22
19207	7979634	5306-00-937-2321	34	23
19207	7979635		31	18
19207	7979660		34	19
63477	7979691	4730-00-773-2163	12	18
			15	2
19207	7979699	1440-00-689-6160	12	15
19207	7979710	5340-00-177-9014	34	3
19207	7979735	9905-00-634-5351	46	1
19207	7979840	2540-00-205-0603	44	1
19207	7979840-1	2540-01-325-1863	44	1
19207	7979972	5306-00-174-4246	26	24
19207	7979985-1		4	12
19207	7979987		19	15
19207	7986977	9905-00-831-6271	46	1
81343	8-6 120102BA	4730-00-142-3076	16	13
19207	8236375		11	2
19207	8327047	5306-00-174-4311	28	8
19207	8328033	5306-00-523-7535	9	15
19207	8330805	4720-00-318-1016	19	2
			19	2
19207	8331226		34	40
19207	8331536	5340-00-281-1446	5	3
			19	4
			19	7
			19	7
19207	8331537	5340-00-281-1444	5	2
			19	4
19207	8331539	2530-00-693-0736	26	3
19207	8331541	5360-00-699-8489	26	4
19207	8331543	5340-00-537-2212	34	44

CROSS-REFERENCE INDEXES

PART NUMBER INDEX

CAGEC	PART NUMBER	STOCK NUMBER	FIG.	ITEM
19207	8331544	5330-00-575-9791	34	46
19207	8331941	4010-00-696-2971	7	12
19207	8331944-1	2530-01-276-5735	7	4
19207	8331946	5340-00-693-0739	7	6
19207	8331947		30	6
19207	8331948	2510-00-693-0741	30	10
19207	8331949		30	4
19207	8331950	4010-00-693-0743	30	16
19207	8331951		30	3
19207	8331952	2540-00-693-0744	30	24
19207	8336703	5310-00-475-1299	9	14
19207	8336704	2530-00-770-9149	9	21
19207	8336705	2530-00-770-9150	9	22
19207	8336789		9	22
19207	8338561	5935-00-833-8561	4	9
			4	9
			5	7
			5	7
19207	8338562	5970-00-833-8562	4	7
			4	7
			5	8
			5	8
19207	8338564	5940-00-399-6676	4	8
			4	8
			5	9
			5	9
19207	8338566	5935-00-572-9180	4	5
19207	8338567	5310-00-833-8567	4	4
19207	8342291	5935-00-679-1519	35	2
19207	8344934	5315-00-597-6079	11	10
19207	8347212	5340-00-040-2364	4	17
19207	8347213	5340-00-040-2365	4	18
19207	8357980	2530-00-204-4800	12	16
19207	8357982	5340-00-574-8356	18	5
79470	8365390	4730-00-289-4937	13	14
19207	8365413		13	17
19207	8365426	4710-00-511-1692	12	1
19207	8365427	2530-00-026-0200	12	14
19207	8375986		22	8
19207	8380420	9320-00-451-8080	BULK	3
19207	8380431	5330-00-415-1488	39	14
			41	40
19207	8380456		41	8
19207	8384055	5360-00-205-4655	7	13
			8	14
19207	8384070	2510-00-571-6968	30	19
19207	8384071	2510-00-535-6797	30	7
19207	8384072	2510-00-590-9734	30	1
19207	8384097	4930-01-162-3855	34	2
19207	8384102	5365-01-158-6311	34	42
19207	8384106	5340-00-420-4988	34	39

CROSS–REFERENCE INDEXES

PART NUMBER INDEX

CAGEC	PART NUMBER	STOCK NUMBER	FIG.	ITEM
19207	8384113		34	38
19207	8384114		34	38
19207	8384116		31	8
19207	8384130	5340-00-472-1942	34	47
19207	8384133	5340-01-218-4491	29	2
19207	8384134		29	5
19207	8384138	2510-01-218-4526	29	6
19207	8384143		34	37
19207	8384144		34	1
19207	8384191	5340-01-276-5096	5	10
19207	8384424	9905-00-634-1765	46	3
19207	8384426	9905-00-634-5350	46	3
19207	8384434	9905-00-078-3721	46	3
19207	8384437	9905-00-634-5271	46	3
19207	8666561	5310-00-682-5631	35	18
19207	8681929	2590-01-026-4179	25	1
19207	8681930	2590-00-886-8066	25	9
19207	8681933	3040-00-177-8056	25	7
19207	8681934	3040-01-247-2215	25	4
19207	8681937	5360-00-886-8064	25	12
19207	8683516	6150-00-830-6663	5	4
19207	8683587	9905-00-815-7673	46	3
19207	8683588	9905-00-770-9155	46	3
19207	8683589	9905-00-815-7675	46	3
19207	8683590	9905-00-815-7674	46	3
19207	8683593		15	7
19207	8683594		15	12
19207	8683595	5340-00-177-9295	17	3
19207	8683597	5970-01-282-1853	31	14
19207	8683600	2530-00-930-8232	16	2
19207	8683601	4720-00-805-0526	16	24
83397	8683602		16	9
19207	8683603		16	20
19207	8683604	4720-01-277-7555	16	6
19207	8683605	5360-00-771-6972	16	23
19207	8683606	5360-00-770-9156	16	10
19207	8683607		17	10
19207	8689833	5340-01-046-8106	30	14
19207	8698433	5340-00-231-7428	39	13
			41	39
19207	8719915	2530-00-677-0202	21	11
19207	8720025	5306-00-335-4768	21	19
19207	8720515	5360-00-699-9018	10	6
19207	8733891	2530-00-987-2565	10	3
19207	8733892	2530-00-522-1157	10	8
19207	8733893		10	8
19207	8733908	2530-00-159-8755	9	20
19207	8733909	2530-00-159-8756	9	20
19207	8733914		9	28
19207	8733915		9	28
19207	8733916	4710-00-741-1907	13	7

CROSS–REFERENCE INDEXES

PART NUMBER INDEX

CAGEC	PART NUMBER	STOCK NUMBER	FIG.	ITEM
19207	8733918	4710-00-630-9928	13	5
19207	8733920	4710-00-566-7133	13	7
19207	8733922	4710-00-566-7134	13	5
19207	8733926	3040-00-150-7127	9	5
19207	8733927	3040-00-074-2357	9	5
19207	8733933	2530-01-083-5641	9	13
19207	8733935	5310-00-314-0764	9	3
19207	8733936	5310-00-314-0765	9	2
19207	8733937	5310-00-322-7260	9	1
19207	8733938	5315-00-322-7261	9	4
19207	8735522	3040-00-441-0210	7	12
19207	8741646	6220-00-775-2384	2	3
19207	8741650	6220-00-433-5966	2	6
19207	8741749	2590-00-611-7107	31	11
19207	8741782	4730-00-883-2620	34	43
19207	8742442	9905-00-078-3720	46	3
19207	8742443	9905-00-050-8793	46	3
19207	8742444	9905-01-061-4282	46	3
19207	8742445		46	3
19207	8747908	5340-00-611-7883	4	18
			4	18
19207	8747909	2590-00-611-7884	4	18
19207	8759465	2510-00-231-7444	40	35
19207	8764667	4730-01-139-9798	16	11
40342	8764668	4730-00-805-0677	16	7
40342	8764670	4730-00-805-0678	16	25
19207	8764672		17	14
19207	8764692		17	8
19207	8764697		16	1
19207	8764705		17	22
19207	8764719		15	13
19207	8764720		17	15
81348	X/GP3/TYRA/C/A/S/ 10.00 R22.5/F	2610-01-063-7947	23	5
64050	TR501	2640-00-555-2829	23	6
81348	ZZ-V-25	2640-00-050-1235	23	7
08SN2	373248	2610-00-262-8677	23	1

CROSS-REFERENCE INDEXES

FIGURE AND lTEM NUMBER INDEX

FIG.	ITEM	STOCK NUMBER	CAGEC	PART NUMBER
BULK	1	8305-00-170-5812	81348	CCC-C-419
BULK	2	4720-01-014-4915	06853	246115
BULK	3	9320-00-451-8080	19207	8380420
BULK	4	4710-00-541-6887	81349	MIL-T-3520
BULK	5	6145-00-705-6678	81349	M13486-1-7
KITS		2530-00-696-0351	40342	RN13A
1	1	5305-00-115-9526	96906	MS18154-58
1	2	5310-00-637-9541	81718	H2525M
1	3	6220-00-669-5623	96906	MS51329-1
1	3	6220-00-669-5623	96906	MS51329-1
1	4	6220-00-500-0437	96906	MS53047-1
1	5	6240-00-044-6914	96906	MS35478-1683
1	6	6240-00-019-0877	96906	MS15570-1251
1	7	5330-00-297-7106	19207	7320658
1	8	6220-00-752-6020	19207	7526020
1	9	6220-00-337-6471	96906	MS51330-1
1	10	6220-00-752-6018	19207	7526018
1	11	5330-00-297-7106	19207	7320658
1	12	6240-00-044-6914	96906	MS35478-1683
1	13	6220-00-500-0437	96906	MS53047-1
2	1	6220-00-846-9745	96906	MS51302-1
2	2	5305-00-764-0070	96906	MS51959-46
2	3	6220-00-775-2384	19207	8741646
2	4	5330-00-678-9047	73331	5942528
2	5	6240-00-019-0877	96906	MS15570-1251
2	6	6220-00-433-5966	19207	8741650
2	7	5310-00-407-9566	96906	MS35338-45
2	8	5306-00-225-9084	96906	MS90726-29
3	1	6220-01-093-4439	96906	MS52125-2
3	2	6220-00-179-4324	19207	11639535
3	3	5330-00-462-0907	19207	11639519-2
3	4	6240-00-044-6914	96906	MS35478-1683
3	5	6240-00-019-3093	96906	MS15570-623
3	6	2510-01-067-4717	19207	11639520
3	7	6240-00-019-0877	96906	MS15570-1251
3	8	5310-00-637-9541	96906	MS35338-46
3	9	5305-01-140-9118	96906	MS90728-59
4	1	2590-00-004-6841	19207	11652182
4	2	5935-00-776-0599	19207	7760599
4	2	5935-00-776-0599	19207	7760599
4	3	5999-00-057-2929	96906	MS27148-2
4	4	5310-00-833-8567	19207	8338567
4	5	5935-00-572-9180	19207	8338566
4	6	6145-00-152-6499	81349	M13486-1-5
4	7	5970-00-833-8562	19207	8338562
4	7	5970-00-833-8562	19207	8338562
4	8	5940-00-399-6676	19207	8338564
4	8	5940-00-399-6676	19207	8338564
4	9	5935-00-833-8561	19207	8338561
4	9	5935-00-833-8561	19207	8338561
4	10	9905-00-752-4649	96906	MS39020-1

CROSS-REFERENCE INDEXES

FIGURE AND ITEM NUMBER INDEX

FIG.	ITEM	STOCK NUMBER	CAGEC	PART NUMBER
4	10	9905-00-752-4649	96906	MS39020-1
4	11	5305-00-855-0956	96906	MS24629-47
4	12		19207	7979985-1
4	13	5305-00-855-0964	96906	MS24629-48
4	14		19207	7979250
4	15	5325-00-249-6352	96906	MS35489-72
4	16	5340-00-282-7544	96906	MS21333-35
4	17	5340-00-040-2364	19207	8347212
4	18	2590-00-611-7884	19207	8747909
4	18	5340-00-040-2365	19207	8347213
4	18	5340-00-611-7883	19207	8747908
4	18	5340-00-611-7883	19207	8747908
5	1	5305-00-855-0956	96906	MS24629-47
5	2	5340-00-281-1444	19207	8331537
5	3	5340-00-281-1446	19207	8331536
5	4	6150-00-330-3629	01475	SW500-43
5	4	6150-00-830-6663	19207	8683516
5	5	9905-00-752-4649	96906	MS39020-1
5	5	9905-00-752-4649	96906	MS39020-1
5	6	5940-00-230-0515	96906	MS25036-154
5	6	5940-00-230-0515	96906	MS25036-154
5	7	5935-00-833-8561	19207	8338561
5	7	5935-00-833-8561	19207	8338561
5	8	5970-00-833-8562	19207	8338562
5	8	5970-00-833-8562	19207	8338562
5	9	5940-00-399-6676	19207	8338564
5	9	5940-00-399-6676	19207	8338564
5	10	5340-01-276-5096	19207	8384191
6	1	2530-00-323-8538	12603	SA20160
6	1	2530-00-741-1005	78500	A1-3216S981
7	1	2530-00-036-0297	19207	11652179
7	2	5315-00-842-3044	96906	MS24665-283
7	3	5310-00-081-4219	96906	MS27183-12
7	4	2530-01-276-5735	19207	8331944-1
7	5	5310-00-923-1925	96906	MS45905-S6
7	6	5340-00-693-0739	19207	8331946
7	7	5310-00-732-0559	96906	MS51968-8
7	8	5306-00-225-9089	96906	MS90726-34
7	9	2530-00-408-9177	19207	5303461
7	10	5310-00-407-9566	96906	MS35338-45
7	11	5310-00-880-7746	96906	MS51968-5
7	12	3040-00-441-0210	19207	8735522
7	12	4010-00-696-2971	19207	8331941
7	13	5360-00-205-4655	19207	8384055
7	14		19207	7415746-1
7	15	5305-00-269-2803	96906	MS90726-60
7	16	5310-00-637-9541	96906	MS35338-46
8	1		21450	441201
8	2	2530-00-741-1007	23705	A298537
8	3		12204	120526
8	4		19207	12204

CROSS-REFERENCE INDEXES

FIGURE AND ITEM NUMBER INDEX

FIG.	ITEM	STOC0K NUMBER	CAGEC	PART NUMBER
8	5	5310-00-407-9566	96906	MS35338-45
8	6	5310-00-732-0559	96906	MS51968-8
8	7	5340-00-741-1008	19207	7411008
8	8	5315-00-754-C848	96906	MS35810-3
8	9		96906	MS35690-525
8	10	2530-00-741-1012	23705	A298265
8	10	5340-00-741-1011	23705	A298264
8	11		96906	MS35292-34
8	12		19207	108629
8	13	2530-00-408-9177	19207	5303461
8	14	5360-00-205-4655	19207	8384055
9	1	5310-00-322-7260	19207	8733937
9	2	5310-00-314-0765	19207	8733936
9	3	5310-00-314-0764	19207	8733935
9	4	5315-00-322-7261	19207	8733938
9	5	3040-00-074-2357	19207	8733927
9	5	3040-00-150-7127	19207	8733926
9	6	2530-00-693-1007	19207	7064978
9	7	5310-00-275-3683	96906	MS35335-40
9	8	5310-00-903-3993	96906	MS51970-4
9	9	5310-00-853-9335	96906	MS35691-13
9	10	5310-00-167-0721	96906	MS35333-41
9	11	3020-00-741-2104	19207	7412104
9	12	5310-00-741-2120	19207	7412120
9	13	2530-00-791-3259	78500	A1-3236M1261
9	13	2530-01-083-5641	19207	8733933
9	14	5310-00-475-1299	19207	8336703
9	15	5306-00-523-7535	19207	8328033
9	16	5306-00-741-1760	19207	7411760
9	17	5310-00-732-0559	96906	MS51968-8
9	18	5310-00-627-6128	96906	MS35335-35
9	19	5305-00-269-2808	96906	MS90726-65
9	20	2530-00-159-8755	19207	8733908
9	20	2530-00-159-8756	19207	8733909
9	21	2530-00-770-9149	19207	8336704
9	22		19207	8336789
9	22	2530-00-770-9150	19207	8336705
9	23	5305-00-269-2804	96906	MS90726-61
9	24	5365-00-741-2103	19207	7412103
9	25	5310-00-641-9939	19207	5323088
9	26	5310-00-582-5965	96906	MS35338-44
9	27	5305-00-068-0515	96906	MS90727-8
9	28		19207	8733914
9	28		19207	8733915
9	29	5305-00-741-2108	19207	7412108
9	30	5310-00-924-4218	96906	MS51970-1
10	1	5310-00-407-9566	96906	MS35338-45
10	2	5306-00-225-8496	96906	MS90725-31
10	3	2530-00-987-2565	19207	8733891
10	3	2530-00-991-4342	81240	35P336
10	4	5310-00-582-5965	96906	MS35338-44

CROSS-REFERENCE INDEXES

FIGURE AND ITEM NUMBER INDEX

FIG.	ITEM	STOCK NUMBER	CAGEC	PART NUMBER
10	5	5310-00-761-6882	96906	MS51967-2
10	6	5360-00-699-9018	19207	8720515
10	7	2530-00-741-2050	19207	7412050
10	7	2530-00-741-2068	19207	7412068
10	8		19207	8733893
10	8	2530-00-522-1157	19207	8733892
10	9	5315-00-741-2106	78500	1259-4-182
11	1	2530-00-741-1014	23705	A298531
11	2		19207	8238375
11	3	5360-00-706-1304	19207	7061304
11	4	5310-00-368-4954	23705	298506
11	5	5340-00-741-1006	19207	7411006
11	6	5306-00-012-0741	12204	120741
11	7	5360-00-741-1017	19207	7411017
11	8	5306-00-316-1023	23705	301638
11	9	2530-01-247-7966	19207	12301170
11	10	5315-00-597-6079	19207	8344934
11	11	5310-00-080-6004	96906	MS27183-14
11	12	5310-00-842-1488	96906	MS35692-21
11	13	5315-00-842-3044	96906	MS24665-283
11	14	5340-00-040-2690	23705	298498
11	14	5340-00-040-2691	23705	298499
11	15	2530-00-040-2692	78500	372-Y-285
11	15	2530-00-040-2693	23705	298517
11	16	5310-00-516-0337	19207	5160337
11	17	5310-00-752-1711	19207	7521711
11	18	5310-00-269-6751	19207	5160345
11	19		96906	MS28932C01-03
11	20		19207	5160341
11	21	5310-00-584-7888	96906	MS35338-51
11	22	5310-00-265-9237	96906	MS35690-1224
12	1	4710-00-511-1692	19207	8365426
12	2	4730-00-908-3194	96906	MS35842-11
12	3	4720-00-809-2750	96906	MS521301A204120
12	4	2530-00-737-3260	19207	7373260
12	5	2530-00-741-2065	19207	7412065
12	6	2530-00-274-4511	19207	7411010
12	7	5310-00-261-7340	96906	MS35338-8
12	8	5305-00-115-9526	96906	MS18154-58
12	9	4730-00-516-7419	19207	5167419
12	10	2530-00-737-3260	19207	7373260
12	11	5310-00-209-1761	19207	5160323
12	12	4730-00-396-2962	63477	FC3354
12	13	5310-00-275-6635	19207	5214539
12	14	2530-00-026-0200	19207	8365427
12	15	1440-00-689-6160	19207	7979699
12	16	2530-00-204-4800	19207	8357980
12	17		19207	7373354
12	18	4730-00-773-2163	63477	7979691
13	1	5310-00-741-2088	19207	7412088
13	2	4730-00-419-9425	19207	7745464

CROSS-REFERENCE INDEXES

FIGURE AND ITEM NUMBER INDEX

FIG.	ITEM	STOCK NUMBER	CAGEC	PART NUMBER
13	3	5365-00-274-4544	19207	5298653
13	4	4730-00-729-6437	82646	7412079
13	5	4710-00-566-7134	19207	8733922
13	5	4710-00-630-9928	19207	8733918
13	6	4730-00-741-1903	19207	7411903
13	7	4710-00-566-7133	19207	8733920
13	7	4710-00-741-1907	19207	8733916
13	8		19207	7973928
13	8		80212	7411076-1
13	9		81349	M3520-A10C02B
13	9		81349	M3520-B70C2G
13	10	4730-00-013-7397	96906	MS51874-4
13	11	5305-00-709-8523	96906	MS90727-87
13	12	4730-00-463-1588	79470	5167679
13	13	5330-00-930-5292	19207	5156636
13	14	4730-00-289-4937	79470	8365390
13	15	4720-00-203-9658	19207	7411023
13	16	2530-00-741-1077	19207	7411077
13	16	4710-01-222-9738	19207	7973930
13	17		19207	8365413
13	18	4730-00-419-9425	19207	7745464
13	19	5310-00-880-7745	96906	MS51968-11
13	20	5310-00-209-0965	96906	MS35338-47
14	1	4720-00-203-9658	19207	7411023
14	2	4710-01-222-9738	19207	7973930
14	3	5365-00-274-4544	19207	5298653
14	4	4730-00-419-9425	19207	7745464
14	5	5310-00-741-2088	19207	7412088
14	6	4730-00-729-6437	63477	7412079
14	7	5310-00-880-7745	96906	MS51968-11
14	8	5310-00-209-0965	96906	MS35338-47
14	9	4730-00-463-1588	79470	5167679
14	10	4710-00-200-0284	81349	M3520-A40C04B
15	1	4710-00-511-1692	23705	A298322
15	2	4730-00-773-2163	63477	7979691
15	3	5330-00-737-3354	19207	7373354
15	4	5305-00-267-8953	96906	MS90727-5
15	5	5310-00-768-0319	96906	MS51968-2
15	6	5310-00-582-5965	96906	MS35338-44
15	7		19207	8683593
15	8	5310-00-809-4058	96906	MS27183-10
15	9	4730-00-277-8643	30379	143342
15	10		96906	MS51861-51
15	11	5340-00-057-2890	96906	MS21333-3
15	12		19207	8683594
15	13		19207	8764719
15	14	4720-00-809-2750	96906	MS521301A204120
15	15	4730-00-908-3193	96906	MS35842-12
16	1		19207	8764697
16	2	2530-00-930-8232	19207	8683600
16	3	5310-00-880-7746	96906	MS51968-5

CROSS-REFERENCE INDEXES

FIGURE AND lTEM NUMBER lNDEX

FIG.	ITEM	STOCK NUMBER	CAGEC	PART NUMBER
16	4	5310-00-407-9566	96906	MS35338-45
16	5	5306-00-225-9086	96906	MS90726-31
16	6	4720-01-277-7555	19207	8683604
16	7	4730-00-805-0677	40342	8764668
16	8	4730-00-908-3194	96906	MS35842-11
16	9		83397	8683602
16	10	5360-00-770-9156	19207	8683606
16	11	4730-01-139-9798	19207	8764667
16	12	4730-00-511-1677	04741	217709
16	13	4730-00-142-3076	81343	8-6 1201028A
16	14	4730-01-079-8821	19207	CPR102321-1
16	15	4730-00-906-7922	96906	MS39136-1B
16	16		19207	2775529-60
16	17	5305-00-432-4201	96906	MS51861-45
16	18	5340-00-177-4039	96906	MS21333-7
16	19		19207	277529-54
16	20		19207	8683603
16	21		79470	7350508
16	22	4730-00-908-3194	96906	MS35842-11
16	23	5360-00-771-6972	19207	8683605
16	24	4720-00-805-0526	19207	8683601
16	25	4730-00-805-0678	40342	8764670
16	26		96906	MS35140-13
16	27		96906	MS35140-15
16	28	5305-00-052-6922	96906	MS24629-58
16	29		96906	MS35140-11
16	30		96906	MS35140-14
17	1	5310-00-732-0559	96906	MS51968-8
17	2	5310-00-637-9541	96906	MS35338-46
17	3	5340-00-177-9295	19207	8683595
17	4	5305-00-115-9526	96906	MS18154-58
17	5	4730-00-516-7419	19207	5167419
17	6	5310-00-209-1761	19207	5160323
17	7	4730-00-278-5812	63477	FC4819
17	8		19207	8764692
17	9	5310-00-275-6635	19207	5214539
17	10		19207	8683607
17	11	4730-00-908-3194	96906	MS35842-11
17	12		79470	7350508
17	13	2530-00-772-5274	40342	C479
17	14		19207	8764672
17	15		19207	8764720
17	16	5310-00-809-5998	96906	MS27183-18
17	17	5310-00-584-5272	96906	MS35338-48
17	18	5310-00-732-0560	96906	MS51968-14
17	19	5305-00-269-3235	96906	MS90727-59
17	20	5305-00-709-8516	96906	MS90727-86
17	21	5310-00-209-0965	96906	MS35338-47
17	22		19207	8764705
18	1	2530-00-293-5139	23075	A298320
18	2	5305-00-269-2803	96906	MS90726-60

CROSS–REFERENCE INDEXES

FIGURE AND ITEM NUMBER INDEX

FIG.	ITEM	STOCK NUMBER	CAGEC	PART NUMBER
18	3	5310-00-543-5101	96906	MS85338-27
18	4	5310-00-732-0559	96906	MS51968-8
18	5	5340-00-574-8356	19207	8457982
18	6	4730-00-069-1187	81343	6-41 20202BA(LON G NUT)
19	1	5330-00-090-2128	06853	213630
19	1	5330-00-090-2128	06853	213630
19	2	4720-00-318-1016	19207	8330805
19	2	4720-00-318-1016	19207	8330805
19	3	5305-00-855-0956	96906	MS24629-47
19	4	5340-00-281-1444	19207	8331537
19	4	5340-00-281-1446	19207	8331536
19	5	2530-00-137-9235	19207	7411021
19	5	2530-00-137-9235	19207	7411021
19	6		19207	145207
19	7	5340-00-281-1446	19207	8331536
19	7	5340-00-281-1446	19207	8331536
19	8	4730-00-069-1186	96906	MS39179-5
19	8	4730-00-069-1187	81343	6-4 120202BA(LON G NUT)
19	9	4730-01-079-8821	19207	CPR102321-1
19	9	4730-01-079-8821	19207	CPR102321-1
19	10	4730-00-906-7922	96906	MS39136-18
19	10	4730-00-906-7922	96906	MS39136-18
19	11	4730-00-278-8825	78550	200360
19	11	4730-00-278-8825	78550	200360
19	12	5340-00-809-1492	96906	MS21333-100
19	12	5340-00-809-1492	96906	MS21333-100
19	13		96906	MS24649-27
19	14		19207	104420-2-1
19	14		19207	104420-2-2
19	15		19207	7979987
19	16	4730-00-069-1186	81343	6-4 120102BA
19	16	4730-00-069-1186	81343	6-4 120102BA
19	17		96906	MS35690-45
19	17	5310-00-761-6882	96906	MS51967-2
19	18	5310-00-582-5965	96906	MS35338-44
19	18	5310-00-582-5965	96906	MS35338-44
19	19	2530-00-797-9295	23705	A298749
19	22	56310-00-679-3606	40342	N12972
19	23	5360-00-706-9054	06853	235093
19	24	5330-00-285-5123	91340	M4X509
19	25	4730-00-580-8457	06853	235091
19	26	4730-00-221-2136	96906	MS20913-15
19	27	5306-00-797-9296	19207	7979296
19	27	5306-00-797-9296	19207	7979296
19	28		19207	12355943-1
19	28		19207	12355943-2

CROSS–REFERENCE INDEXES

FIGURE AND ITEM NUMBER INDEX

FIG.	ITEM	STOCK NUMBER	CAGEC	PART NUMBER
20	1	2530-00- 021-2366	96906	MS5300420
20	2	5310-00-880-7746	96906	MS51968-5
20	3	5310-00-407-9566	96906	MS35338-45
20	4	5306-01-043-5702	19207	11625105
20	5	2530-01-042-0683	19207	11625104
20	6	4730-01-079-8821	19207	CPR102321-1
20	7	4730-00-293-7108	06853	200361
20	8	4730-00-278-8825	78550	200360
20	9	5340-00-809-1492	96906	MS21333-100
20	10	5305-00-855-0956	96906	MS24629-47
20	11	4730-00-196-1505	96906	MS51953-101
20	12	4820-00-849-1220	96906	MS35782-5
20	13	4730-00-057-5555	96906	MS49005-6
20	14		19207	104420-2-3
20	15	4730-00-069-1187	81343	6-4 120202BA (LONG NUT)
21	1		02686	128975
21	2		02686	129378
21	3		02686	MS35206-279
21	4	5305-00-988-1723	96906	MS35338-63
21	5	5310-00-274-8715	96906	6144454
21	6	2530-00-614-4454	19200	6144356
21	7	5330-00-614-4356	19207	7411379
21	8	5310-00-741-1379	19207	7411378
21	9	5310-00-741-1378	19207	7411378
21	9	5310-00-741-1378	19207	71423E
21	10	2530-00-693-1010	09386	MS19081-230
21	11		96906	8719915
21	12	2530-00-677-0202	19207	MS51946-2
21	13	5306-00-383-4957	96906	MS51922-61
21	14	5310-00-832-9719	96906	7411429
21	15	5330-00-741-1429	19207	7411425
21	16	2530-00-741-1425	19207	7413231
21	17	2530-00-741-3231	19207	MS51946-11
21	18	5306-00-206-1560	96906	7411433
21	19	5365-00-741-1433	19207	8720025
21	20	5306-00-335-4768	19207	MS27183-14
21	21	5310-00-080-6004	96906	MS21045-6
22	1	2530-00-738-9061	96906	MS53045-3
22	2	2530-00-026-0265	96906	MS53044-5
22	3	2530-00-026-0255	78500	3262H86
22	4	5330-00-599-4230	19207	7521787
22	5	5310-00-752-1633	19207	7521633
22	6	3110-00-087-9881	19207	10948079
22	7	3040-00-752-1655	78500	A333E785
22	8		19207	8375986
22	9	5306-00-206-6339	96906	MS51946-3
22	9	5306-00-206-6340	96906	MS51946-4

CROSS–REFERENCE INDEXES

FIGURE AND ITEM NUMBER INDEX

FIG.	ITEM	STOCK NUMBER	CAGEC	PART NUMBER
22	10		06906	MS51983-2
22	10	5310-00-581-5566	96906	MS51983-1
22	11	5310-00-151-8992	19207	7521650
22	12	5310-00-584-5272	96906	MS35338-48
22	13	5310-00-206-3518	12204	120426
22	14	3110-00-087-3930	19207	10945151
22	15	5330-00-891-7826	19207	10896684
22	16	5310-00-732-0559	96906	MS51968-8
22	17		81718	MS35338-46
22	18	5310-00-753-1667	19207	7521667
22	19	2530-00-288-2986	19207	10896696
22	20	2530-00-026-0251	19207	7521663
22	21	5306-00-752-1631	19207	7521631
22	22	2530-00-293-1752	19207	7521664
22	23	5306-00-275-5700	19207	7521629
23	1	2610-00-262-8677	08SN2	373248
23	2	2610-00-269-7383	81348	GROUP2/9.00-20/T R175A/ON CENTER
23	3	2640-00-810-5861	96906	MS51377-1
23	4	2640-00-060-3550	51665	US48
23	5	2610-01-063-7947	81348	X/GP3/TYRA/C/A/S/ 10.00 R22.5/F
23	6	2640-00-555-2829	64050	TR501
23	7	2640-00-050-1235	81348	ZZ-V-25
24	1	2540-00-999-5584	96906	MS51339-3
24	2	5310-00-044-6284	24617	446284
24	3	5315-00-234-1664	96906	MS24665-495
24	4	5310-00-741-1028	19207	7411028
24	5	4010-00-741-1027	19207	7411027
24	6	5310-00-820-6653	96906	MS35338-50
24	7	5310-00-763-8920	96906	MS51967-20
25	1	2590-01-026-4179	19207	8681929
25	2	5310-00-732-0559	96906	MS51968-8
25	3	5310-00-637-9541	81718	H2525M
25	4	3040-01-247-2215	19207	8681934
25	5	5305-00-269-2803	96906	MS90726-60
25	6	5310-00-067-6356	96906	MS51922-57
25	7	3040-00-177-8056	19207	8681933
25	8	4730-00-050-4208	96906	MS15003-1
25	9	2590-00-886-8066	19207	8681930
25	10	5315-00-904-2800	96906	MS20392-7027
25	11	5315-00-839-5822	96906	MS24665-353
25	12	5360-00-886-8064	19207	8681937
25	13	5305-00-947-4364	96906	MS90728-201
26	1	2590-01-183-6816	19207	12259830
26	2	5310-00-982-6810	96906	MS21044-N12
26	3	2530-00-693-0736	19207	8331539
26	4	5360-00-699-8489	19207	8331541
26	5		96906	MS16556-844
26	6	2540-01-215-1617	19207	12259844
26	7		19207	12259830-1
26	8	5340-01-222-5247	19207	12312996
26	9	5310-00-014-5850	96906	MS27183-42
26	10	5310-00-877-5797	96906	MS21044-N3

CROSS–REFERENCE INDEXES

FIGURE AND ITEM NUMBER INDEX

FIG.	ITEM	STOCK NUMBER	CAGEC	PART NUMBER
26	11	2530-01-215-3389	19207	12259845
26	12	5315-00-844-5836	96906	MS16562-65
26	13	5310-00-483-8792	96906	MS17829-4C
26	14	5340-01-209-0475	19207	12259835
26	15	5340-01-209-0503	19207	12259840
26	16	5310-00-660-3381	96906	MS21083-N5
26	17	5340-01-209-0500	19207	12259837
26	18	5306-00-225-9093	96906	MS90726-38
26	19	5305-00-071-2241	96906	MS90725-10
26	20	3040-01-209-0497	19207	12259831
26	21	5305-00-989-7435	96906	MS35207-264
26	22	5305-00-071-2066	96906	MS90728-109
26	23	5310-00-584-5272	96906	MS35338-48
26	24	5306-00-174-4246	19207	7979972
26	25	5310-00-068-5285	96906	MS27183-20
26	26	2590-01-210-8843	19207	12259839
26	27		96906	MS21044-N9
27	1	2590-00-491-6856	19207	10885200
27	2	2590-00-790-2294	19207	10885203
27	3	3020-00-790-2289	19207	7534680
27	4	5365-00-819-7025	19207	7534685
27	5		19207	10885202
27	6		19207	10885201
27	7	5315-00-790-2290	19207	7534687
27	8	3040-00-790-2291	19207	7534682
27	9	5360-00-347-6712	19207	7045152
27	10	2590-01-137-3371	19207	7534694
27	11	2590-00-790-2292	19207	7534677
27	12		19207	7534686
27	13	5310-00-763-8901	96906	MS1968-23
27	14	5340-00-790-2293	19207	7534675
27	15	5360-01-090-4540	19207	7045149
27	16	3110-00-198-1050	00141	AK6
27	17	5315-00-816-5491	19207	7534690
28	1	2510-01-194-9890	19207	7979525
28	2		19207	7979573
28	3	5310-00-427-0043	19207	7411041
28	4	2510-00-752-1826	56442	20328
28	5	2510-00-752-1841	56442	348S3
28	6	4730-00-050-4203	96906	MS15001-1
28	7	5305-00-269-3244	96906	MS90727-68
28	8	5306-00-174-4311	19207	8327047
28	9	2510-00-736-8628	78500	5RE72E
28	10	2510-00-741-1042	19207	7411042
28	11		19207	7979574
28	12	5310-00-732-0559	96906	MS51968-8
28	13	5310-00-543-5101	96906	MS35338-27
29	1	5305-00-226-7767	96906	MS90726-109
29	2	5340-01-218-4491	19207	8384133
29	3	5310-00-584-5272	96906	MS35338-48
29	4	5310-00-732-0560	96906	MS51968-14

CROSS-REFERENCE INDEXES

FIGURE AND ITEM NUMBER INDEX

FIG.	ITEM	STOCK NUMBER	CAGEC	PART NUMBER
29	5		19207	8384134
29	6	2510-01-218-4526	19207	8384138
29	7	5305-00-719-5219	96906	MS90727-111
30	1	2510-00-590-9734	19207	8384072
30	2	5305-00-958-8473	96906	MS90726-232
30	3		19207	8331951
30	4		19207	8331949
30	5	5310-00-225-6409	96906	MS51922-68
30	6		19207	8331947
30	7	2510-00-535-6797	19207	8384071
30	8	5305-00-719-5219	96906	MS90727-111
30	9		19207	503388
30	10	2510-00-693-0741	19207	8331948
30	11	5305-00-071-2505	96906	MS90728-7
30	12	5310-00-582-5965	96906	MS35338-44
30	13	5310-00-809-4058	96906	MS27183-10
30	14	5340-01-046-8106	19207	8689833
30	15		19207	1705812-1
30	16	4010-00-693-0743	19207	8331950
30	17	5315-00-018-7988	96906	MS24665-493
30	18	5315-01-164-6493	19207	7411047
30	19	2510-00-571-6968	19207	8384070
30	20	5310-00-584-5272	96906	MS35338-48
30	21	5310-00-732-0560	96906	MS51968-14
30	22	5305-00-719-5219	96906	MS90727-111
30	23	2510-01-237-2413	19207	12355807
30	24	2540-00-693-0744	19207	8331952
31	1	4730-00-137-9218	96906	MS39231-7
31	2		24617	219695
31	3	4730-00-044-4715	15434	S962
31	4		24617	219679
31	5		90598	10517-2
31	6	4730-00-196-1470	96906	MS51953-145
31	7		96906	MS90523-1Y3
31	8		19207	8384116
31	9		19207	502921
31	10	4720-01-095-0515	23705	319271
31	11	2590-00-611-7107	19207	8741749
31	12		19207	12354281
31	13		96906	MS51846-118
31	14	5970-01-282-1853	19207	8683597
31	15		21450	443866
31	16	4730-00-246-9205	81996	A2303-12-51PC18
31	17	5305-00-267-8953	96906	MS90727-5
31	18		19207	7979635
31	19	5310-00-768-0319	96906	MS51968-2
31	20		96906	MS35338-025
31	21	4730-01-293-6888	96906	MS51813-10
31	22	4710-00-143-9053	19207	7979633
31	23	4730-01-254-1253	19207	10944734
31	24		81346	ASTM A53

CROSS-REFERENCE INDEXES

FIGURE AND ITEM NUMBER INDEX

FIG.	ITEM	STOCK NUMBER	CAGEC	PART NUMBER
31	25	4820-00-142-2099	19207	7412255
32	1	4510-00-741-2238	86107	29-1
32	2	4510-00-741-2237	19207	C7412237
33	1	4510-01-193-4080	19207	7412239
34	1		19207	8384144
34	2	4930-01-162-3855	19207	8384097
34	3	5340-00-177-9014	19207	7979710
34	4	2510-00-741-2233	19207	7412233
34	5	4730-00-741-2249	19207	7412249
34	6	2510-00-703-9760	19207	7039760
34	7	5340-00-741-2247	19207	7412247
34	8	5315-00-013-7258	96906	MS24665-497
34	9		19207	7412283
34	10	4010-00-741-2295	19207	7412295
34	11	5315-00-842-3044	96906	MS24665-283
34	12	5330-00-741-2242	19207	7412242
34	13	5310-00-741-2276	19207	7412276
34	14	2510-00-741-2234	19207	7412234
34	15	5315-00-842-3044	96906	MS24665-283
34	16	5310-00-080-6004	96906	MS27183-14
34	17		19207	7412286
34	18		19207	7979622
34	19		19207	7979660
34	20	5310-00-889-2606	96906	MS35425-42
34	21	5310-00-080-6004	96906	MS27183-14
34	22		19207	7412285
34	23	5306-00-937-2321	19207	7979634
34	24	5315-00-842-3044	96906	MS24665-283
34	25	4730-00-546-5898	21530	S384
34	26		19207	7412286
34	27	5315-00-741-2282	19207	7412282
34	28	5306-00-741-2228	19207	7412228
34	29	5315-00-018-7988	96906	MS24665-493
34	30	5310-00-809-5998	96906	MS27183-18
34	31	5305-00-269-3234	96906	MS90727-58
34	32	2540-00-040-2417	23705	321090
34	33	5310-00-732-0559	96906	MS51968-8
34	34	5310-00-637-9541	81718	H2525M
34	35	4730-00-909-8627	96906	MS35842-13
34	36	4720-01-095-0515	23705	319271
34	37		19207	8384143
34	38		19207	8384113
34	38		19207	8384114
34	39	5340-00-420-4988	19207	8384106
34	40		19207	8331226
34	41	2540-00-040-2414	19220	57108
34	42	5365-01-158-6311	19207	8384102
34	43	4730-00-883-2620	19207	8741782
34	44	5340-00-537-2212	19207	8331543
34	45	5305-00-726-2553	96906	MS90727-166
34	46	5330-00-575-9791	19207	8331544

CROSS-REFERENCE INDEXES

FIGURE AND ITEM NUMBER INDEX

FIG.	ITEM	STOCK NUMBER	CAGEC	PART NUMBER
34	47	5340-00-472-1942	19207	8384130
34	48		19207	451027
35	1		19207	7335512
35	2	5935-00-679-1519	19207	8342291
35	3		19207	7056678-10
35	4	5306-00-226-4828	96906	MS90728-35
35	5		19207	7335511
35	6		19207	7045791-2
35	7		19207	10922107
35	8		19207	7056678-10-1
35	9		19207	10922108
35	10	5975-00-100-8766	06542	FED-STD 156
35	11		19207	10885375
35	12		19207	10885377
35	13	5310-00-582-5965	96906	MS35338-44
35	14	5310-00-761-6882	96906	MS51967-2
35	15	5306-00-068-0514	96906	MS90727-7
35	16	5305-00-068-0502	96906	MS90725-6
35	17	5305-00-421-3986	19207	7336058
35	18	5310-00-682-5631	19207	8666561
35	19	5935-00-770-8275	90129	X8110-3
35	20	5310-00-768-0319	96906	MS51968-2
35	21		19207	178434
35	22	5305-00-984-6207	96906	MS35206-260
35	23	5925-00-952-8641	52737	P120
35	24	5305-00-052-6922	96906	MS24629-58
35	25	5310-00-809-4058	96906	MS27183-10
36	1	5305-00-071-2069	96906	MS90728-113
36	2		19207	10885353
36	3	5305-00-115-9526	96906	MS18154-58
36	4	5305-00-068-0511	96906	MS90728-62
36	5	5310-00-595-7237	96906	MS35333-42
36	6	5310-00-732-0558	96906	MS51967-8
36	7	5310-00-889-2606	96906	MS35425-42
36	8	5310-00-225-6993	96906	MS51922-33
36	9		19207	10885351
36	10		19207	10885350
36	11	5305-00-990-6444	96906	MS35207-261
36	12		19207	10923514
36	13	5310-00-045-3296	96906	MS35338-43
36	14	5310-00-934-9751	96906	MS35650-302
37	1	5310-00-761-6882	96906	MS51967-2
37	2	5310-00-550-1130	96906	MS35333-40
37	3		19207	10885355
37	4	5305-00-988-1727	96906	MS35206-283
37	5		19207	10885357
37	6	5305-00-432-4172	96906	MS51861-37
37	7	4610-00-020-5375	19207	7534653
37	8		19207	10885354
38	1		19207	10885238
38	1		19207	10885239

CROSS-REFERENCE lNDEXES

FIGURE AND ITEM NUMBER INDEX

FIG.	ITEM	STOCK NUMBER	CAGEC	PART NUMBER
38	2	5305-00-988-1727	96906	MS35206-283
38	3		19207	10885292
38	4		19207	7003071
38	5		19207	144897
38	6	5305-00-959-4159	96906	MS24617-53
38	7		19207	10885244
38	7		19207	10885293
38	8		19207	4518080-2
38	9		19207	10885296
38	9		19207	10885388
38	10	5306-00-225-8496	96906	MS90725-31
38	11	5310-00-167-0721	96906	MS35333-41
38	12		19207	7018991
38	13		19207	7018992
38	14		19207	10929947
38	15	5310-00-407-9566	96906	MS35338-45
38	16	5310-00-880-7744	96906	MS51967-5
38	17	5305-00-959-4159	96906	MS24617-53
38	18		19207	10885360
38	19	5306-00-225-8496	96906	MS90725-31
39	1		19207	10885340
39	2	5310-00-488-3889	96906	MS51943-39
39	3	5310-00-809-3079	96906	MS27183-19
39	4	5310-00-880-7746	96906	MS51968-5
39	5	5310-00-407-9566	96906	MS35338-45
39	6		19207	10885356
39	7	5310-00-934-9758	96906	MS35649-202
39	8	5310-00-045-3296	96906	MS35338-43
39	9		19207	70885237
39	10	5305-00-958-5471	96906	MS35190-273
39	11		19207	10900796
39	12	5330-00-522-8544	21450	582826
39	13	5340-00-231-7428	19207	8698433
39	14	5330-00-415-1488	19207	8380431
39	15		96906	MS24649-35
39	16	5306-00-051-4077	96906	MS90727-35
39	17		19207	10885346
39	18		19207	10885347
39	19		19207	10885357
39	20	5305-00-432-4170	96906	MS51861-35
39	21	5305-00-057-7165	96906	MS24615-25
39	22		19207	754653
40	1	5305-00-959-4159	96906	MS24617-53
40	2		19207	10885207
40	3		19207	10885225
40	4	5305-00-052-6921	96906	MS24629-57
40	5		19207	10885208
40	6		19207	726735
40	7	5340-00-466-1978	19220	5607-51
40	8	5315-00-839-5820	96906	MS24665-134
40	9	5340-01-275-1219	19207	10871578

CROSS-REFERENCE lNDEXES

FIGURE AND ITEM NUMBER INDEX

FIG.	ITEM	STOCK NUMBER	CAGEC	PART NUMBER
40	10	5310-00-582-5965	96906	MS35338-44
40	11	5305-00-267-8950	96906	MS90727-1
40	12	5310-00-934-9751	96906	MS35650-302
40	13	5310-00-045-3296	96906	MS35338-43
40	14	5305-00-990-6444	96906	MS35207-261
40	15	5340-00-389-0318	19207	7264634
40	16	5310-00-768-0319	96906	MS51968-2
40	17	5310-00-880-7746	96906	MS51968-5
40	18	5310-00-407-9566	96906	MS35338-45
40	19		19207	10885211
40	20	5310-00-934-9758	96906	MS35649-202
40	21	4610-00-924-0315	19207	7534653
40	22	5305-00-432-4172	96906	MS51861-37
40	23		19207	10885219
40	24		19207	10885227
40	25		19207	10885220
40	26	5305-00-984-6212	96906	MS35206-265
40	27		19207	1092995-1
40	28	2540-00-231-0200	19207	7084828
40	29	5305-00-225-9092	96906	MS90726-37
40	30	5306-00-051-4077	96906	MS90727-35
40	31	5305-00-879-7941	96906	MS24617-31
40	32		19207	7335509
40	33	5305-00-068-0512	96906	MS90727-4
40	34	5306-00-027-0722	96906	MS35751-19
40	35	2510-00-231-7444	19207	8759465
40	36	5340-00-766-6336	19207	7535620
40	37		19207	10923514
40	38	5305-00-958-4353	96906	MS35207-229
41	1	5305-00-959-4159	96906	MS24617-53
41	2		19207	10885221
41	3	5310-00-045-3296	96906	MS35338-43
41	4	5310-00-934-9751	96906	MS35650-302
41	5	5306-00-226-4822	96906	MS90728-29
41	6	5315-00-839-5822	96906	MS24665-353
41	7		19207	10922097
41	8		19207	8380496
41	9		19207	10885228
41	10	5340-00-177-3957	96906	MS35812-11
41	11	5315-00-140-1938	96906	MS35810-6
41	12	5310-00-225-6993	96906	MS51922-33
41	13	5310-00-809-3079	96906	MS27183-19
41	14	5340-00-679-1492	71843	2392A
41	15	5306-00-225-8496	96906	MS90725-31
41	16	5310-00-407-9566	96906	MS35338-45
41	17	5310-00-934-9757	96906	MS35649-282
41	18		19207	10885229
41	19	5305-00-068-0502	96906	MS90725-6
41	20	5310-00-582-5965	96906	MS35338-44
41	21	5310-00-934-9758	96906	MS35649-202
41	22		19207	10885211

CROSS-REFERENCE INDEXES

FIGURE AND ITEM NUMBER INDEX

FIG.	ITEM	STOCK NUMBER	CAGEC	PART NUMBER
41	23		19207	10885225
41	24	5305-00-052-6921	96906	MS24629-57
41	25	5305-00-432-4172	96906	MS51861-37
41	26	4610-00-020-5375	19207	7534653
41	27		19207	10885219
41	28		19207	10885227
41	29		19207	10885220
41	30	5305-00-984-6212	96906	MS35206-265
41	31		19207	10885282
41	32	5305-00-855-0965	96906	MS24629-38
41	33	5310-00-761-6882	96906	MS51967-2
41	34		19207	10885237
41	35	5305-00-059-4568	96906	MS35190-253
41	36	5310-00-880-7744	96906	MS51967-5
41	37		19207	10900797
41	38	5330-00-522-8544	21450	582826
41	39	5340-00-231-7428	19207	8698433
41	40	5330-00-415-1488	19207	8380431
41	41	5305-00-855-0960	96906	MS24629-36
41	42		19207	10923514
41	43	5305-00-990-6444	96906	MS35207-261
41	44	5310-00-934-9754	96906	MS35650-382
41	45		19207	10885218
41	46	5305-00-958-4357	96906	MS35207-242
41	47		19207	10885231
42	1	5306-00-226-4834	96906	MS35291-41
42	2	5310-00-087-7493	96906	MS27183-13
42	3	5340-00-766-3330	19207	7535643
42	4	5306-00-225-8498	96906	MS90725-33
42	5		96906	MS35337-26
42	6		23040	3379757
42	7	5310-00-407-9566	96906	MS35338-45
42	8	5310-00-880-7744	96906	MS51967-5
42	9	5305-00-416-6297	96906	MS35226-64
42	10		19207	10885381
42	11		19207	10885321
42	12	5310-00-934-9751	96906	MS35650-302
42	13	5310-00-045-3296	96906	MS35338-43
43	1		19207	10885392
43	2		19207	10885398
43	3	5305-00-819-7024	19207	10885400
43	4		19207	10885399
43	5		19207	10885397
43	6		19207	10885393
43	7		19207	10885396
43	8	2910-00-141-9758	96906	MS35645-1
43	9	5310-00-934-9755	96906	MS35650-362
43	10	5310-00-885-7734	94222	17-10015-13
43	11	5305-00-984-7356	96906	MS35191-239
44	1	2540-00-205-0603	19207	7979840
44	1	2540-01-325-1863	19207	7979840-1
45	1	9905-00-202-3639	96906	MS 35387-2

CROSS-REFERENCE INDEXES

FIGURE AND ITEM NUMBER INDEX

FiG.	ITEM	STOCK NUMBER	CAGEC	PART NUMBER
45	1	9905-00-205-2795	96906	MS35387-1
45	2	5310-00-761-6882	96906	MS51967-2
45	2	5310-00-768-0319	96906	MS51968-2
45	3	5310-00-582-5965	96906	MS35338-44
45	4	5305-00-138-0069	96906	MS51861-44
45	4	5305-00-879-7941	96906	MS24617-31
45	4	5305-00-988-1723	96906	MS35206-279
45	4	5305-00-993-2738	96906	MS35207-280
46	1	9905-00-282-7489	19207	7979373
46	1	9905-00-634-5351	19207	7979735
46	1	9905-00-831-6271	19207	7996977
46	2	5305-00-432-4170	96906	MS51861-35
46	3		19207	12355591
46	3		19207	8742445
46	3		23705	325046
46	3	9905-00-050-8793	19207	8742443
46	3	9905-00-078-3720	19207	8742442
46	3	9905-00-078-3721	19207	8384434
46	3	9905-00-634-1765	19207	8384424
46	3	9905-00-634-5271	19207	8384437
46	3	9905-00-634-5350	19207	8384426
46	3	9905-00-770-9155	19207	8683588
46	3	9905-00-813-2314	19207	10885378
46	3	9905-00-815-7673	19207	8683587
46	3	9905-00-815-7674	19207	8683590
46	3	9905-00-815-7675	19207	8683589
46	3	9905-01-061-4282	19207	8742444
46	3	9905-01-210-0232	19207	12331770
46	4		19207	10884699
46	5	9905-00-999-7369	96906	MS53007-2
46	6	9905-00-999-7370	96906	MS53007-1
46	7		21450	441201
46	8		19207	12355971
47	1	5120-00-795-0946	19207	7950946

APPENDIX G
ILLUSTRATED LIST OF MANUFACTURED ITEMS

Section 1. INTRODUCTION

G-1 . SCOPE.

a. This appendix includes complete instructions for making items authorized to be manufactured or fabricated.

b. A part number index in alphanumeric order is provided for cross-referencing the part number of the item to be manufactured to the figure which covers fabrication criteria.

c. All bulk materials needed for manufacture of an item are listed by National Stock Number (NSN), part number, or specification number in the manufacturing instructions.

Table G-1. Manufactured Items Part Number Cross-reference Index.

Part Number	Figure Number
CCC-C-419	G-1
MIL-T-3520	G-4
Ml 3486- 1-7	G-5
246115	G-2
8380420	G-3

Section II. MANUFACTURING INSTRUCTIONS

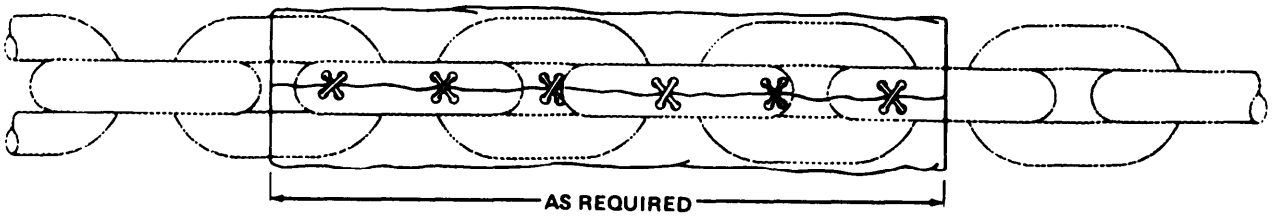

NOTES:

1. Make from NSN 8305-00-170-5812, Part Number CCC-C-419 stock.
2. Cut ends of material square.

Figure G-1 . Duck Cloth.

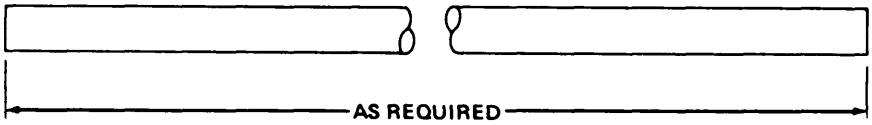

NOTES:

1. Make from NSN 4720-01-014-4915, Part Number 246115 stock,
2. Cut ends of hose square.

Figure G-2. Nonmetallic Hose.

TA505375

Section II. MANUFACTURING INSTRUCTIONS (Con't)

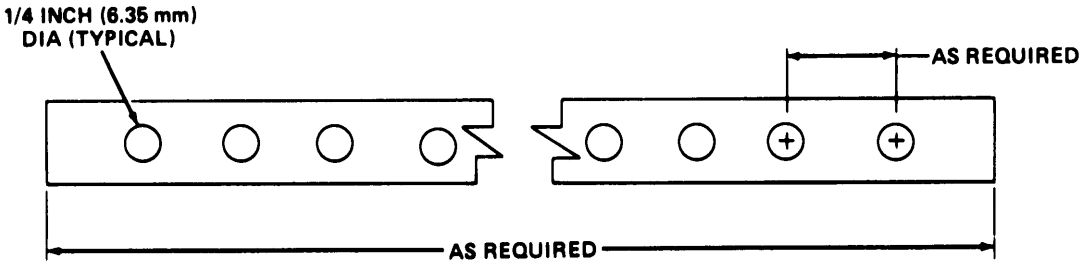

NOTES:

1. Make from NSN 9320-00-451-8080, Part Number 8380420 stock.
2, Cut ends of strip square.
3. Hole spacing is as required.

Flgure G-3. Rubber Strip.

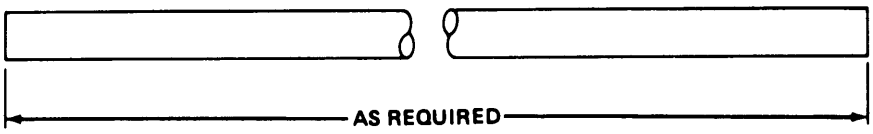

NOTES:

1. Make from NSN 4710-00-541-6887, Part Number MIL-T-3520 stock.
2. Cut ends of tube square.
3. Remove burrs from inside of tube.

Figure G-4. Tube.

TA506376

Section II. MANUFACTURING INSTRUCTIONS (Con't)

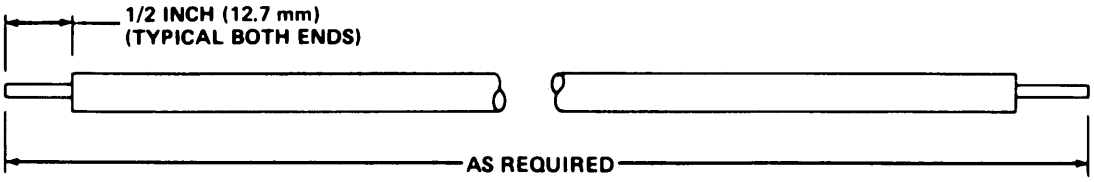

NOTE: Make from NSN 6145-00-705-6678, Part Number Ml 3486- 1-7 stock.

Figure G-5. Electrical Wire.

TA505377

APPENDIX H
TORQUE LIMITS

H-1 . SCOPE.

This appendix lists standard torque values, as shown in Table H-1, and provides general information for applying torque. Special torque values and tightening sequences are indicated in the maintenance procedures for applicable components.

H-2. GENERAL.

a. Always use the torque values listed in Table H-1 when the maintenance procedure does not give a specific torque value.

b. Unless otherwise specified, standard torque tolerance shall be +10%.

c. Torque values are based on clean, dry threads. Reduce torque by 10% when engine oil is used as a lubricant. Reduce torque by 20% if new plated capscrews are used.

d. Capscrews threaded into aluminum may require reductions in torque of 30% or more of Grade 5 capscrew torque. Capscrew threaded into aluminum must also attain two capscrew diameters of thread engagement.

CAUTION

If replacement capscrews are of a higher grade than originally supplied, use torque specifications for the original. This will prevent equipment damage due to overtorquing.

Table H-1. Torque Limits.

Current Usage	Much Used	Much Used	Used at Times	Used at Times
Quality of Material	Indeterminate	Minimum Commercial	Medium Commercial	Best Commercial
SAE Grade Number	1 or 2	5	6 or 7	8
Capscrew Head Markings Manufacturer's marks may vary These are all SAE Grade 5 (3 line)	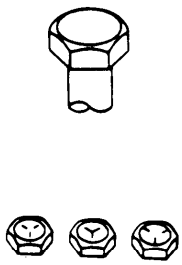	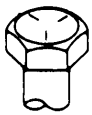		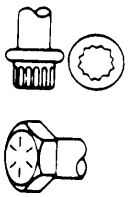
Capscrew Body Size Inches - Thread	Torque lb.-ft. (N•m)	Torque lb.-ft. (N•m)	Torque lb.-ft. (N•m)	Torque lb.-ft. (N•m)
¼ 20	5 (7)	8 (11)	10 (14)	12 (16)
28	6 (8)	10 (14)		14 (19)
5/16 18	11 (15)	17 (23)	19 (26)	24 (33)
24	13 (18)	19 (26)		27 (37)
⅜ 16	18 (24)	31 (42)	34 (46)	44 (60)
24	20 (27)	35 (47)		49 (66)
7/16 14	28 (38)	49 (66)	55 (75)	70 (95)
20	30 (41)	55 (75)		78 (106)
½ 13	39 (53)	75 (102)	85 (115)	105 (142)
20	41 (56)	85 (115)		120 (163)
9/16 12	51 (69)	110 (149)	120 (163)	155 (210)
18	55 (75)	120 (163)		170 (231)
⅝ 11	83 (113)	150 (203)	167 (226)	210 (285)
18	95 (129)	170 (231)		240 (325)
¾ 10	105 (142)	270 (366)	280 (380)	375 (508)
16	115 (156)	295 (400)		420 (569)
⅞ 9	160 (217)	395 (536)	440 (597)	605 (820)
14	175 (237)	435 (590)		675 (915)
1 8	235 (319)	590 (800)	660 (895)	910 (1234)
14	250 (339)	660 (895)		990 (1342)

TA505378

INDEX

Subject	*Paragraph*	*Page*
A		
Adjustable caster assembly	4-54	4-90
Adjustment:		
Handbrake cable	4-32	4-40
Handbrake lever (all except M107A1)	3-6	3-10
Service brake assembly:		
M103A1, M105A1, and M107A1	4-33	4-42
M103A3, M105A2, M105A2C, M107A2, and M107A2C	4-34	4-48
Wheel bearings:		
M103A1, M105A1, and M107A1	4-48	4-76
M103A3, M105A2, M105A2C, M107A2, and M107A2C	4-49	4-81
Airbrake chamber	4-43	4-70
Air coupling	4-46	4-74
Air filter	4-45	4-72
Air hose assembly	4-46	4-74
Air leak check, operational	3-7	3-10
Air reservoir	4-44	4-71
Auxiliary power cable (M448):		
Operation	2-15	2-19
Testing	4-70	4-141
Axle, rear	5-1	5-1
B		
Basic issue items (BII)	Appendix C	C-1
Blackout:		
Stoplight	4-21	4-15
Taillight	4-22	4-18
Bleeding hydraulic brake system	4-39	4-61
Body maintenance, cargo:		
M105A1	5-4	5-7
M105A2 and M105A2C	5-5	5-10
Body shop van (M448)	5-10	5-22
Brake assembly, service:		
M103A1, M105A1, and M107A1	4-33	4-42
M103A3, M105A2, M105A2C, M107A2, and M107A2C	4-34	4-48
Brakedrum:		
Replacement:		
M103A1, M105A1, and M107A1	4-48	4-76
M103A3, M105A2, M105A2C, M107A2, and M107A2C	4-49	4-81
Repair	5-2	5-5

INDEX

Subject	*Paragraph*	*Page*
Brake, hand:		
Cable adjustment	4-32	4-40
Cable replacement:		
All except M107A1	4-30	4-34
M107A1	4-31	4-37
Brake, hand:		
Lever adjustment (all except M107A1)	3-6	3-10
Lever replacement:		
All except M107A1	4-28	4-32
M107A1	4-29	4-33
Bumper:		
Tailgate (M105 series)	4-58	4-100
Rear door (M448)	4-65	4-127

C

Cable:		
Auxiliary power (M448):		
Operation	2-15	2-19
Testing	4-70	4-141
Handbrake:		
Adjustment	4-32	4-40
Replacement:		
All except M107A1	4-30	4-34
M107A1	4-31	4-37
Intervehicular	4-26	4-28
Cargo:		
Body maintenance:		
M105A1	5-4	5-7
M105A2 and M105A2C	5-5	5-10
Trailer, loading (M105 series)	2-13	2-18
Caster assembly, adjustable	4-54	4-90
Chain, safety	4-52	4-87
Chamber:		
Airbrake	4-43	4-70
Vacuum	4-40	4-63
Chart, lubrication:		
M103A1, M103A3, M105A1, M107A2, and M107A2C	3-2	3-3
M105A2C	3-2	3-5
M107A1	3-2	3-4
Chassis wiring harness	4-24	4-24
Circuit breaker (M448):		
Replacement	4-69	4-134
Testing	4-70	4-141

INDEX

Subject	*Paragraph*	*Page*
Cleaning instructions:		
General maintenance	4-17	4-13
Water tank body (M107 series)	5-7	5-13
Components, location and description of major	1-7	1-3
Composite marker light	4-23	4-22
Controls and indicators, operator's	2-2	2-1
Coupling:		
Air	4-46	4-74
Vacuum quick	4-41	4-66
Coupling trailer to towing vehicle	2-10	2-15
Cylinder:		
Master:		
All except M105A2C	4-35	4-53
M105A2C	4-40	4-63
Wheel (all except M105A2C)	4-36	4-55

D

Data, equipment	1-10	1-9
Data plate	4-73	4-146
Destruction of Army materiel to prevent enemy use	1-3	1-1
Diagrams, wiring	4-27	4-30
Differences between models	1-9	1-9
Discharge valve (M107 series):		
Operation	2-14	2-18
Replacement	5-6	5-12
Door (M448):		
Left rear	4-62	4-111
Right rear	4-63	4-116
Side	4-64	4-121
Door latch, side (M448)	4-67	4-131
Door seal, rear (M448)	4-65	4-127
Drawbar ring	4-51	4-86
Drum, brake:		
Maintenance:		
M103A1, M105A1, and M107A1	4-48	4-76
M103A3, M105A2, M105A2C, M107A2, and M107A2C	4-49	4-81
Repair	5-2	5-5

E

Electrical receptacle, 110-volt (M448)	4-71	4-143

INDEX

Subject	*Paragraph*	*Page*
Electrical system, 110-volt (M448):		
Operation	2-15	2-19
Maintenance	4-69	4-134
Testing	4-70	4-141
Emergency relay valve	4-47	4-75
Enemy use, destruction of Army materiel to prevent	1-3	1-1
Equipment:		
Characteristics, capabilities, and features	1-6	1-2
Data	1-10	1-9
Expendable/durable supplies and material list	Appendix E	E-1
Extensions, fender (M107 series)	4-59	4-102

F

Faucets (M107 series)	4-60	4-104
Fender and fender extensions (M107 series)	4-59	4-102
Filter, air	4-45	4-72
Fording	2-23	2-22
Frame assembly maintenance (M107 series)	5-8	5-18
Front ventilator (M448)	4-68	4-133

H

Handbrake:		
Cable adjustment	4-32	4-40
Cable replacement:		
All except M107A1	4-30	4-34
M107A1	4-31	4-37
Lever adjustment (all except M107A1)	3-6	3-10
Lever replacement:		
All except M107A1	4-28	4-32
M107A1	4-29	4-33
Hose assembly, air	4-46	4-74
Hoses:		
Hydraulic	4-37	4-56
Tagging	4-20	4-14
Vacuum	4-42	4-68
Hub maintenance:		
M103A1, M105A1, and M107A1	4-48	4-76
M103A3, M105A2, M105A2C, M107A2, and M107A2C	4-49	4-81

INDEX

Subject	Paragraph	Page
Hydraulic:		
Brake system, bleeding	4-39	4-61
Lines, hoses, and fittings (all except M105A2C)	4-37	4-56
Tank (M105A2C)	4-38	4-59

I

Illustrated list of manufactured items	Appendix G	G-1
Inspection instructions, general maintenance	4-18	4-14
Intervehicular cable	4-26	4-28

J

Jack, leveling (M448)	4-55	4-93

L

Lamps:		
Blackout stoplight	4-21	4-15
Composite marker light	4-23	4-22
Service and blackout taillight	4-22	4-18
Latch, side door	4-67	4-131
Leak check, operational (air)	3-7	3-10
Left rear door maintenance (M448)	4-62	4-111
Leg, rear support (M105 series)	4-53	4-88
Leveling jack (M448)	4-55	4-93
Lever, handbrake:		
Adjustment (all except M107A1)	3-6	3-10
Replacement:		
M107A1	4-29	4-33
All except M107A1	4-28	4-32
Lights:		
Blackout and service taillight	4-22	4-18
Blackout stoplight	4-21	4-15
Composite marker	4-23	4-22
Lines, hoses, and fittings:		
Hydraulic (all except M105A2C)	4-37	4-56
Vacuum (M105A2C)	4-42	4-68
Loading cargo trailer (M105 series)	2-13	2-18

INDEX

Subject	*Paragraph*	*Page*
Location and description of major components	1-7	1-3
Lubrication chart:		
M103A1, M103A3, M105A1, M107A2, and M107A2C	3-2	3-3
M105A2C	3-2	3-5
M107A1	3-2	3-4

M

Maintenance allocation chart (MAC)	Appendix B	B-1
Maintenance instructions, general:		
Cleaning	4-17	4-13
Inspection	4-18	4-14
Repair	4-19	4-14
Tagging wires and hoses	4-20	4-14
Work safety	4-16	4-12
Manhole cover (M107 series)	5-9	5-20
Manufactured items, illustrated list of	Appendix G	G-1
Marker light, composite	4-23	4-22
Master cylinder:		
All except M105A2C	4-35	4-53
M105A2C	4-40	4-63
Models, differences between	1-9	1-9
Molding, side door (M448)	4-66	4-130

O

Oil seal, wheel:		
M103A1, M105A1, and M107A1	4-48	4-76
M103A3, M105A2, M105A2C, M107A2, and M107A2C	4-49	4-81
110-volt electrical system:		
Maintenance	4-69	4-134
Operation	2-15	2-19
Testing	4-70	4-141
Operational air leak check	3-7	3-10
Operator/crew:		
Preventive maintenance checks and services (PMCS)	Table 2-1	2-6
Troubleshooting	Table 3-1	3-8
Troubleshooting symptom index	3-5	3-8
Operator's controls and indicators	2-2	2-1

P

Piping and valves (M107 series)	4-60	4-104

INDEX

Subject	Paragraph	Page
Plate, data	4-73	4-146
Plates, location and contents of	1-8	1-8
Preparation of equipment:		
For administrative storage	4-76	4-147
For shipment	4-80	4-150
Preventive maintenance checks and services (PMCS):		
Operator/crew	Table 2-1	2-6
Unit	Table 4-1	4-4

R

Rear axle	5-1	5-1
Rear door (M448):		
Left	4-62	4-111
Right	4-63	4-116
Seal and bumper	4-65	4-127
Rear support leg (105 series)	4-53	4-88
Receptacle (M448):		
Repair	4-71	4-143
Replacement	4-69	4-134
Testing	4-70	4-141
Reflector	4-72	4-144
Relay valve, emergency	4-47	4-75
Repair instructions, general maintenance	4-19	4-14
Repair parts and special tools lists (RPSTL)	Appendix F	F-1
Reservoir, air	4-44	4-71
Ring, drawbar	4-51	4-86

S

Safety chain	4-52	4-87
Safety, work	4-16	4-12
Seal, side door upper (M448)	4-66	4-130
Service brake assembly maintenance:		
M103A1, M105A1, and M107A1	4-33	4-42
M103A3, M105A2, M105A2C, M107A2, and M107A2C	4-34	4-48
Service upon receipt:		
Inspection instructions	4-5	4-2
Servicing instructions	4-6	4-2
Shackle, spring	4-57	4-98
Shipment, preparation of equipment for	4-80	4-150

INDEX

Subject	*Paragraph*	*Page*
Side door (M448):		
Latch	4-67	4-131
Maintenance	4-64	4-121
Upper seal and molding	4-66	4-130
Springs	4-56	4-95
Spring Shackle	4-57	4-98
Storage, administrative:		
Preparation of equipment for	4-76	4-147
Removal of equipment from	4-79	4-150
Support leg, rear (M105 series)	4-53	4-88
Symptom index, troubleshooting:		
Operator/crew	3-5	3-8
Unit	4-14	4-7

T

Tagging wires and hoses	4-20	4-14
Tailgate (M105 series)	4-58	4-100
Taillight, service and blackout	4-22	4-18
Tank:		
Hydraulic (M105A2C)	4-38	4-59
Water (M107 series):		
Body maintenance	5-7	5-13
Cleaning and refinishing interior	5-7	5-13
Frame assembly maintenance	5-8	5-28
Manhole cover	5-9	5-20
Operation	2-14	2-18
Vent	4-61	4-109
Testing 110-volt electrical system	4-70	4-141
Tire and tube maintenance	4-50	4-85
Tire repair	5-3	5-6
Torque limits	Appendix H	H-1
Towing instructions	2-11	2-17
Towing vehicle:		
Coupling trailer to	2-10	2-15
Uncoupling trailer from	2-12	2-17
Troubleshooting:		
Operator/crew	Table 3-1	3-8
Unit	Table 4-2	4-7
Symptom index:		
Operator/crew	3-5	3-8
Unit	4-14	4-7
Tube maintenance	4-50	4-85

INDEX

Subject	*Paragraph*	*Page*
U		
Uncoupling trailer from towing vehicle	2-12	2-17
Unit:		
Preventive maintenance checks and services (PMCS)	Table 4-1	4-4
Troubleshooting	Table 4-2	4-7
Troubleshooting symptom index	4-14	4-7
Upper seal and molding, side door (M448)	4-66	4-130
V		
Vacuum:		
Chamber (M105A2C)	4-40	4-63
Lines, hoses, and fittings (M105A2C)	4-42	4-68
Quick coupling (M105A2C)	4-41	4-66
Valve:		
Discharge (M107 series)	4-60	4-104
Emergency relay	4-47	4-75
Manifold (M107 series)	4-60	4-104
Ventilator, front (M448)	4-68	4-133
Vent (M107 series)	4-61	4-109
W		
Water tank trailer (M107 series):		
Body maintenance	5-7	5-13
Cleaning and refinishing interior	5-7	5-13
Frame assembly maintenance	5-8	5-18
Manhole cover	5-9	5-20
Operation of	2-14	2-18
Vent	4-61	4-109
Wheel:		
Bearing maintenance and adjustment:		
M103A1, M105A1, and M107A1	4-48	4-76
M103A3, M105A2, M105A2C, M107A2, and M107A2C	4-49	4-81
Cylinder (all except M105A2C)	4-36	4-55
Replacement	3-8	3-11
Tire and tube maintenance	4-50	4-85

INDEX

Subject	*Paragraph*	*Page*
Wiring harness:		
Chassis	4-24	4-24
Repair	4-25	4-26
Work safety	4-16	4-12

By Order of the Secretary of the Army:

CARL E. VUONO
General, United States Army
Chief of Staff

Official:

THOMAS F. SIKORA
Brigadier General, United States Army
The Adjutant General

By Order of the Secretary of the Air Force:

LARRY D. WELCH
General, United States Air Force
Chief of Staff

ALFRED G. HANSEN
General, United States Air Force
Commander, Air Force Logistics Command

Distribution:

To be distributed in accordance with DA Form 12-39-E, (Block No. 0572), Operator and Unit maintenance requirements forTM 9-2320-213-14&P.

☆ U.S. GOVERNMENT PRINTING OFFICE : 1995 O - 395-877

RECOMMENDED CHANGES TO PUBLICATIONS AND BLANK FORMS For use of this form, see AR 25-30; the proponent agency is ODISC4.	Use Part II *(reverse)* for Repair Parts and Special Tool Lists (RPSTL) and Supply Catalogs/Supply Manuals (SC/SM).	DATE Date you filled out this form.
TO: *(Forward to proponent of publication or form) (Include ZIP Code)* AMSTA-LC-LPIT / TECH PUBS, TACOM-RI 1 Rock Island Arsenal Rock Island, IL 61299-7630	FROM: *(Activity and location) (Include ZIP Code)* Your mailing address	

PART I – ALL PUBLICATIONS (EXCEPT RPSTL AND SC/SM) AND BLANK FORMS

PUBLICATION/FORM NUMBER	DATE	TITLE
TM 9-2330-213-14&P	9 Oct 1990	Chassis, Trailer: 1 1/2-Ton, 2-Wheel, M103A1

ITEM NO.	PAGE NO.	PARA-GRAPH	LINE NO.*	FIGURE NO.	TABLE NO.	RECOMMENDED CHANGES AND REASON (Provide exact wording of recommended changes, if possible).
	0004 00-2	4-7				Wrong POC is listed.

**Reference to line numbers within the paragraph or subparagraph.*

TYPED NAME, GRADE OR TITLE	TELEPHONE EXCHANGE/AUTOVON, PLUS EXTENSION	SIGNATURE
Your Name		Your Signature

SAMPLE

DA FORM 2028, FEB 74 REPLACES DA FORM 2028, 1 DEC 68, WHICH WILL BE USED. USAPPC V3.00

TO: (*Forward direct to addressee listed in publication*)	FROM: (*Activity and location) (Include ZIP Code)*	DATE
AMSTA-LC-LPIT / TECH PUBS, TACOM-RI 1 Rock Island Arsenal Rock Island, IL 61299-7630	Your address	Date you filled out this form

PART II – REPAIR PARTS AND SPECIAL TOOL LISTS AND SUPPLY CATALOGS/SUPPLY MANUALS

PUBLICATION NUMBER	DATE	TITLE
TM 9-2330-213-14&P	9 October 1990	Chassis, Trailer: 1 1/2- Ton, 2-Wheel, M03A1

PAGE NO.	COLM NO.	LINE NO.	NATIONAL STOCK NUMBER	REFERENCE NO.	FIGURE NO.	ITEM NO.	TOTAL NO. OF MAJOR ITEMS SUPPORTED	RECOMMENDED ACTION

PART III – REMARKS (*Any general remarks or recommendations, or suggestions for improvement of publications and blank forms. Additional blank sheets may be used if more space is needed.)*

TYPED NAME, GRADE OR TITLE	TELEPHONE EXCHANGE/AUTOVON, PLUS EXTENSION	SIGNATURE
Your Name		Your Signature

USAPPC V3.00

RECOMMENDED CHANGES TO PUBLICATIONS AND BLANK FORMS For use of this form, see AR 25-30; the proponent agency is ODISC4.	Use Part II *(reverse)* for Repair Parts and Special Tool Lists (RPSTL) and Supply Catalogs/Supply Manuals (SC/SM).	DATE
TO: *(Forward to proponent of publication or form) (Include ZIP Code)* AMSTA-LC-LPIT / TECH PUBS, TACOM-RI 1 Rock Island Arsenal Rock Island, IL 61299-7630	FROM: *(Activity and location) (Include ZIP Code)*	

PART I – ALL PUBLICATIONS (EXCEPT RPSTL AND SC/SM) AND BLANK FORMS

PUBLICATION/FORM NUMBER	DATE	TITLE
TM 9-2330-213-14&P	9 October 1990	Chassis, Trailer: 1 1/2-Ton, 2-Wheel, M103A1

ITEM NO.	PAGE NO.	PARA-GRAPH	LINE NO.*	FIGURE NO.	TABLE NO.	RECOMMENDED CHANGES AND REASON *(Provide exact wording of recommended changes, if possible).*

**Reference to line numbers within the paragraph or subparagraph.*

TYPED NAME, GRADE OR TITLE	TELEPHONE EXCHANGE/AUTOVON, PLUS EXTENSION	SIGNATURE

DA FORM 2028, FEB 74 REPLACES DA FORM 2028, 1 DEC 68, WHICH WILL BE USED. USAPPC V3.00

TO: (*Forward direct to addressee listed in publication*) AMSTA-LC-LPIT / TECH PUBS, TACOM-RI 1 Rock Island Arsenal Rock Island, IL 61299-7630	FROM: (*Activity and location) (Include ZIP Code)*	DATE

PART II – REPAIR PARTS AND SPECIAL TOOL LISTS AND SUPPLY CATALOGS/SUPPLY MANUALS

PUBLICATION NUMBER	DATE	TITLE
TM 9-2330-213-14&P	9 October 1990	Chassis, Trailer: 1 1/2- Ton, 2-Wheel, M103A1

PAGE NO.	COLM NO.	LINE NO.	NATIONAL STOCK NUMBER	REFERENCE NO.	FIGURE NO.	ITEM NO.	TOTAL NO. OF MAJOR ITEMS SUPPORTED	RECOMMENDED ACTION

PART III – REMARKS (*Any general remarks or recommendations, or suggestions for improvement of publications and blank forms. Additional blank sheets may be used if more space is needed.)*

TYPED NAME, GRADE OR TITLE	TELEPHONE EXCHANGE/AUTOVON, PLUS EXTENSION	SIGNATURE

USAPPC V3.00

RECOMMENDED CHANGES TO PUBLICATIONS AND BLANK FORMS For use of this form, see AR 25-30; the proponent agency is ODISC4.	Use Part II *(reverse)* for Repair Parts and Special Tool Lists (RPSTL) and Supply Catalogs/Supply Manuals (SC/SM).	DATE
TO: *(Forward to proponent of publication or form) (Include ZIP Code)* AMSTA-LC-LPIT / TECH PUBS, TACOM-RI 1 Rock Island Arsenal Rock Island, IL 61299-7630	FROM: *(Activity and location) (Include ZIP Code)*	

PART I – ALL PUBLICATIONS (EXCEPT RPSTL AND SC/SM) AND BLANK FORMS

PUBLICATION/FORM NUMBER	DATE	TITLE
TM 9-2330-213-14&P	9 October 1990	Chassis, Trailer: 1 1/2-Ton, 2- Wheel, M103A1

ITEM NO.	PAGE NO.	PARA-GRAPH	LINE NO.*	FIGURE NO.	TABLE NO.	RECOMMENDED CHANGES AND REASON *(Provide exact wording of recommended changes, if possible).*

**Reference to line numbers within the paragraph or subparagraph.*

TYPED NAME, GRADE OR TITLE	TELEPHONE EXCHANGE/AUTOVON, PLUS EXTENSION	SIGNATURE

DA FORM 2028, FEB 74 REPLACES DA FORM 2028, 1 DEC 68, WHICH WILL BE USED. USAPPC V3.00

TO: (*Forward direct to addressee listed in publication*) AMSTA-LC-LPIT / TECH PUBS, TACOM-RI 1 Rock Island Arsenal Rock Island, IL 61299-7630	FROM: (*Activity and location) (Include ZIP Code)*	DATE

PART II – REPAIR PARTS AND SPECIAL TOOL LISTS AND SUPPLY CATALOGS/SUPPLY MANUALS

PUBLICATION NUMBER	DATE	TITLE
TM 9-2330-213-14&P	9 October 1990	Chassis, Trailer: 11/2- Ton, 2-Wheel, M103A1

PAGE NO.	COLM NO.	LINE NO.	NATIONAL STOCK NUMBER	REFERENCE NO.	FIGURE NO.	ITEM NO.	TOTAL NO. OF MAJOR ITEMS SUPPORTED	RECOMMENDED ACTION

PART III – REMARKS (*Any general remarks or recommendations, or suggestions for improvement of publications and blank forms. Additional blank sheets may be used if more space is needed.)*

TYPED NAME, GRADE OR TITLE	TELEPHONE EXCHANGE/AUTOVON, PLUS EXTENSION	SIGNATURE

USAPPC V3.00

RECOMMENDED CHANGES TO PUBLICATIONS AND BLANK FORMS For use of this form, see AR 25-30; the proponent agency is ODISC4.	Use Part II *(reverse)* for Repair Parts and Special Tool Lists (RPSTL) and Supply Catalogs/Supply Manuals (SC/SM).	DATE
TO: *(Forward to proponent of publication or form) (Include ZIP Code)* AMSTA-LC-LPIT / TECH PUBS, TACOM-RI 1 Rock Island Arsenal Rock Island, IL 61299-7630	FROM: *(Activity and location) (Include ZIP Code)*	

PART I – ALL PUBLICATIONS (EXCEPT RPSTL AND SC/SM) AND BLANK FORMS

PUBLICATION/FORM NUMBER	DATE	TITLE
TM 9-2330-213-14&P	9 October 1990	Chassis, Trailer: 1 1/2-Ton, 2- Wheel, M103A1

ITEM NO.	PAGE NO.	PARA-GRAPH	LINE NO.*	FIGURE NO.	TABLE NO.	RECOMMENDED CHANGES AND REASON *(Provide exact wording of recommended changes, if possible).*

**Reference to line numbers within the paragraph or subparagraph.*

TYPED NAME, GRADE OR TITLE	TELEPHONE EXCHANGE/AUTOVON, PLUS EXTENSION	SIGNATURE

DA FORM 2028, FEB 74 REPLACES DA FORM 2028, 1 DEC 68, WHICH WILL BE USED. USAPPC V3.00

TO: (*Forward direct to addressee listed in publication*) AMSTA-LC-LPIT / TECH PUBS, TACOM-RI 1 Rock Island Arsenal Rock Island, IL 61299-7630	FROM: (*Activity and location) (Include ZIP Code)*	DATE

PART II – REPAIR PARTS AND SPECIAL TOOL LISTS AND SUPPLY CATALOGS/SUPPLY MANUALS

PUBLICATION NUMBER	DATE	TITLE
TM 9-2330-213-14&P	9 October 1990	Chassis, Trailer: 11/2- Ton, 2-Wheel, M103A1

PAGE NO.	COLM NO.	LINE NO.	NATIONAL STOCK NUMBER	REFERENCE NO.	FIGURE NO.	ITEM NO.	TOTAL NO. OF MAJOR ITEMS SUPPORTED	RECOMMENDED ACTION

PART III – REMARKS (*Any general remarks or recommendations, or suggestions for improvement of publications and blank forms. Additional blank sheets may be used if more space is needed.)*

TYPED NAME, GRADE OR TITLE	TELEPHONE EXCHANGE/AUTOVON, PLUS EXTENSION	SIGNATURE

USAPPC V3.00

THE METRIC SYSTEM AND EQUIVALENTS

LINEAR MEASURE

1 Centimeter=10 Millimeters=O.01 Meters =O. 3937 Inches
1 Meter =100 Centimeters=1000 Millimeters=39.37 Inches
1 Kilometer=1000 Meters =O.621 Miles

WEIGHTS

1 Gram=0.001 KIlograms=l000 Milligrams=O.035 ounces
1 Kilogram=1000 Grams= 2.2 Lb
1 Metric Ton=1000 Kilograms=l Megagram=l.1 Short Tons

LIQUID MEASURE

1 Milliliter=O.001 Liters=O.0338 Fluid Ounces
1 Liter=1000 Milliliters=33.82 Fluid Ounces

SQUARE MEASURE

1 Sq Centimeter= 100 Sq Millimeters-O.155 Sq Inches
1 Sq Meter =l0,000 Sq Centimeters=10 .76 Sq Feet
1 Sq Kilometer=l,OOO,OOO Sq Meters =O.0386 Sq Miles

CUBIC MEASURE

1 Cu Centimeter =1000 Cu Millineters=O.06 Cu Inches
1 Cu Meter=1,000,OOO Cu Centineters=35.31 Cu Feet

TEMPERATURE

5'9 ("F - 32) = "C
212°'Fahrenheit is equivalent to 100° Celsius
90" Fahrenheit is equivalent to 32.2° CelSiuS
32° Fahrenheit is equivalent to 0° Celsius
9'5 C" +32=F°'

APPROXIMATE CONVERSION FACTORS

TO CHANGE	TO	MULTIPLY BY
Inches	Centimeters	2.540
Feet	Meters	0.305
Yards	Meters	0.914
Miles	Kilometers	1.609
Square Inches	Square Centimeters	6.451
Square Feet	Square Meters	0.093
Square Yards	Square Meters	0.836
Square Miles	Square Kilometers	2.590
Acres	Square Hectometers	0.405
Cubic Feet	Cubic Meters	0.028
Cubic Yards	Cubic Meters	0.765
Fluid Ounces	Milliliters	29.573
Pints	Liters	0.473
Quarts	Liters	0.946
Gallons	Liters	3.785
Ounces	Grams	28.349
Pounds	Kilograms	0.454
Short Tons	Metric Tons	0.907
Pound-Feet	Newton-Meters	1.356
Pounds per Square Inch	Kilopascals	6.895
Miles per Gallon	Kilometers per Liter	0.425
Miles Per Hour	Kilometers per Hour	1.609

TO CHANGE	TO	MULTIPLY BY
Centimeters	Inches	0.394
Meters	Feet	3.280
Meters	Yards	1.094
Kilometers	Miles	0.621
Square Centimeters	Square Inches	0.155
Square Meters	Square Feet	10.764
Square Meters	Square Yards	'1.196
Square Kilometers	Square Miles	0.386
Square Hectometers	Acres	2.471
Cubic Meters	Cubic Feet	35.315
Cubic Meters	Cubic Yards	1.308
Milliliters	Fluid Ounces	0.034
Liters	Pints	2.113
Liters	Quarts	1.057
Liters	Gallons	0.264
Grams	Ounces	0.035
Kilograms	Pounds	2.205
Metric Tons	Short Tons	1.102
Newton-Meters	Pound-Feet	0.738
Kilopascals	Pounds per Square Inch	0.145
Kilometers per Liter	Miles per Gallon	2.354
Kilometers per Hour	Miles per Hour	0.621

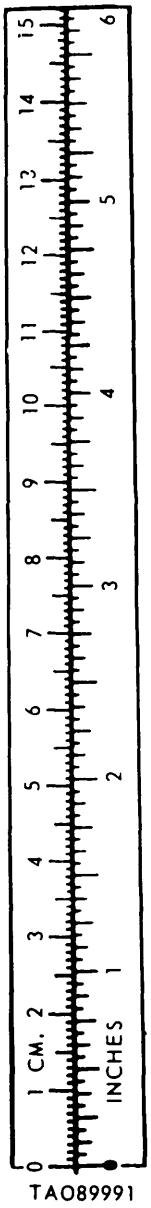

(FOR REFERENCE ONLY)